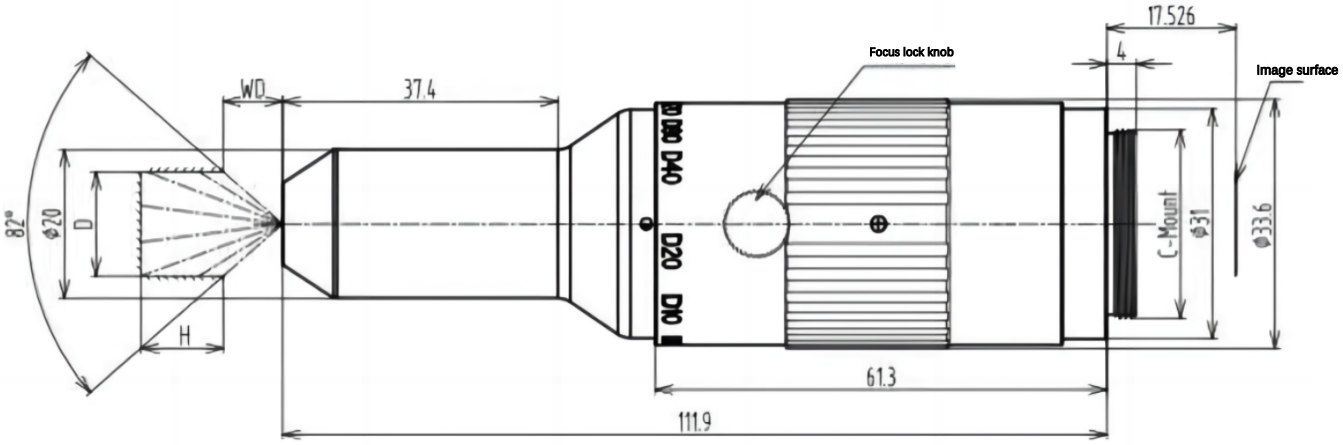Model		HF-IR3602306A
Sensor size		2/3"
Wave length		450-650
Image field of view		6.6
Working distance		2.7-70
Diameter(mm)	High(mm)	Working distance(mm)
5	5	2.7
10	10	6
20	21	11
30	31	17.2
40	41	23
50	51.2	29
60	61.4	35
80	82	46.5
100	102.3	58.3
120	123	70