HUAQINGJUN®

AN ENTITY MANUFACTURER THAT TAKES PRODUCT QUALITY AS ITS LIFE.

TO PROVIDE YOU WITH PROFESSIONAL INDUSTRIAL CONTROL SOLUTIONS.

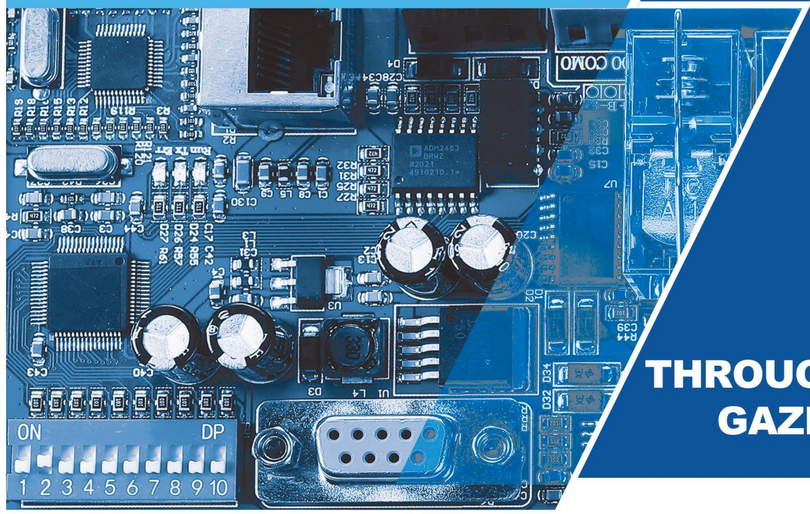

THROUGH THICK AND THIN GAZING INTO THE FUTURE

Foshan Qingjun Electronics Co., Ltd.

Tel: 0757-81809248/17708670771
Alibaba Website: https://fsqjkj.en.alibaba.com
Address：Floor 307, Block B, West of No. 2, Lianhe Avenue, Luocun Shishan Town, Nanhai District, Foshan, Guangdong, CN

WhatsApp　WeChat　Alibaba Store

Foshan Qingjun Electronics Co.,Ltd.

COMPANY PROFILE

Foshan Qingjun Electronics Co., Ltd. was founded in 2004 and is now located in Foshan, Guangdong, one of the four ancient towns in China. The company is committed to the development, production and sales of Internet of Things, industrial automation, and intelligent products. The company has 4G modules, Ethernet modules, WIFI modules, Bluetooth modules, simple programmable PLC all-in-one machines, RS485 communication modules, and industrial relay modules, PLC AC and DC power amplifier modules ect. core products. With the tenet of "breaking through ourselves, ingenuity and quality", the company strives to improve its R&D capabilities and product quality standards, and has been at the forefront of the industry. The company has a number of national patents, and has also won honors such as "National High Technology Expertise" and "Guangdong Province Contract-abiding and Credit-abiding Enterprise". The products have passed "IS09001: 2015 Quality Certification". And has obtained CE, ROHS, FCC ect. certifications.

The company has gathered a large number of experienced R&D talents with professional academic backgrounds in electronic engineering, automation engineering, communication engineering, etc. The professional team closely serves end customers, continuously improves customer experience, and serves the majority of Internet of Things companies and equipment manufacturing companies. Customize more competitive industry solutions. The company has a professional intelligent production factory. The production line is equipped with advanced SMT placement machines, automatic wave soldering, automatic packaging machines and a complete set of quality inspection equipment to ensure that every product produced is "meticulous and ingenious manufacturing. ", so that customers can buy and use with confidence.



Company Website: http://www.fshqj.com/en/

Made In China: https://fsqj81809248.en.made-in-china.com/

Alibaba: https://fsqjkj.en.alibaba.com

Aliexpress: https://www.aliexpress.com/store/1101534187

HONOR CERTIFICATE





Company Qualification Certificates

FACTORY SCENE

Independent products - products designed, produced and sold by themselves.
Ensure quality and quantity - product circuit design, component procurement, production process to be guaranteed. Mass production of STM patch and DIP plug-in to ensure quantity.
Excellent technical support and service - can customize all kinds of control panels according to customer requirements, and can do pre-sales guidance, after-sales maintenance, product technical support, upgrades, ect.



Company picture


Samples showroom



Testing laboratory


Warehouse storage


Production workshop


Production workshop

Have our own research team

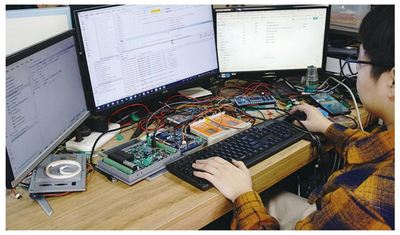











PRODUCT CATALOGUE

Huaqingjun HMI 01-04
HMI All-in-one 05-06
16~64-Channel PLC All-in-one Machine 07-18
Wiring Diagram of PLC all-in-one Machine 19
Wring Diagram of RS485 Module 20
PLC-3U Series 21-23
Siemens Expansion Modules 24
RS485 Weighing Transmitter Module 25
LoRa Data Transmission Module 26
RS485 Boxed Module 27-31
RS485 Communication Digital Output Module 32-33
RS485 Communication Inputs and Outputs Module 34
Ethernet Communication Digital Outputs Module 35
RS485 Digital Acquisition Module 36
RS485 Ethernet Digital Inputs Module 37-38
Temperature Acquisition Module 39-40
RS485 LAN Current Voltage Transformer Detection Module 41-43
PLC Amplifier Board Series 44-47
Relay Module Series 48-55
Boxed Miniature Single Open Relay Module 56
Single Contact Relay Module 57
Intermediate Relay 58-59
Switching Power Supply 60-61
Serial Port Server 62
Equipment and Application Scenarios 63
Customized Product Series 64

Huaqingjun HMI



Front Side

Optional Ethernet Type





Back Part

Product Software Performance Features

1.Support file saving, save after editing interface, convenient for next time's editing.

2.Support a variety of communication protocols, you can set the timeout time and send interval time.

3.Support simulation, after editing the interface just click to display the simulation effect on the computer.

4.Support to add up to 2000 pages, large capacity without anxiety about page limitations

5.Support copy, cut and paste, control arrangement, easy to make the effect.

6.Supports bit buttons and word buttons, bit buttons control the display by bit, word buttons control the display by word, and each button can be set to display pictures.

7.Supports numeric display, real-time monitoring of device registers.

8.Support image display, including jpg/png/bmp/gif

9.Supports permission settings to prevent false triggering

10.Support drop-down list box, click on the pop-up option, select to trigger the corresponding effect

11.Support slider, slide to set the device. Immediate sending and sending interval can be selected.

12.Support scale, real-time display of values, but also can be converted to formulas

13.Support flow block, can set the flow speed, can set the picture, curve display

14.Support for table display

15.Support QR Code Curve/Pie/Column Chart

Product Hardware Parameter List

Item	parameters							
Product Pictures								
Product Model	QJ-P043 -T24	QJ-P043 -T24L	QJ-P070 -T24	QJ-P070 -T24L	QJ-P100 -T24	QJ-P100 -T24L	QJ-P150 -T24	QJ-P150 -T24L
Resolution	480*272(4.3 Inch)		800*480 (7 Inch)		1024*600 (10.1Inch)		1024*768 (15 Inch)	
Monitor	4.3"TFT LCD		7"TFT LCD		10.1"TFT LCD		15"TFT LCD	

Screen Brightness	350cd/m2	Color Chromaticity	True Color65K RGB
Touch Method	Resistive	RAM	64M DDR
Reservoir	128MB NAND FLASH	Processors	ARM9600MHZ R ISC
Power supply specification parameters			
Rating	3.5W	8.5W	10W
Rated Voltage	10~28VDC	Power Protection	2kV Surge Resistance
Environmental Specification Parameters			
Operating Temperature	-10°C~50°C	Storage temperature	-40°C~70°C
Environmental Temperature	10~90%RH(Non-Condensing)	Seismic Defenses	10~25Hz (X, Y, Z direction, 2g/30min)
Cooling method	Natural Air Cooling	Protection Class	Front panel IP65 (with flat panel mounting), rear enclosure IP20

Product Interface Analysis

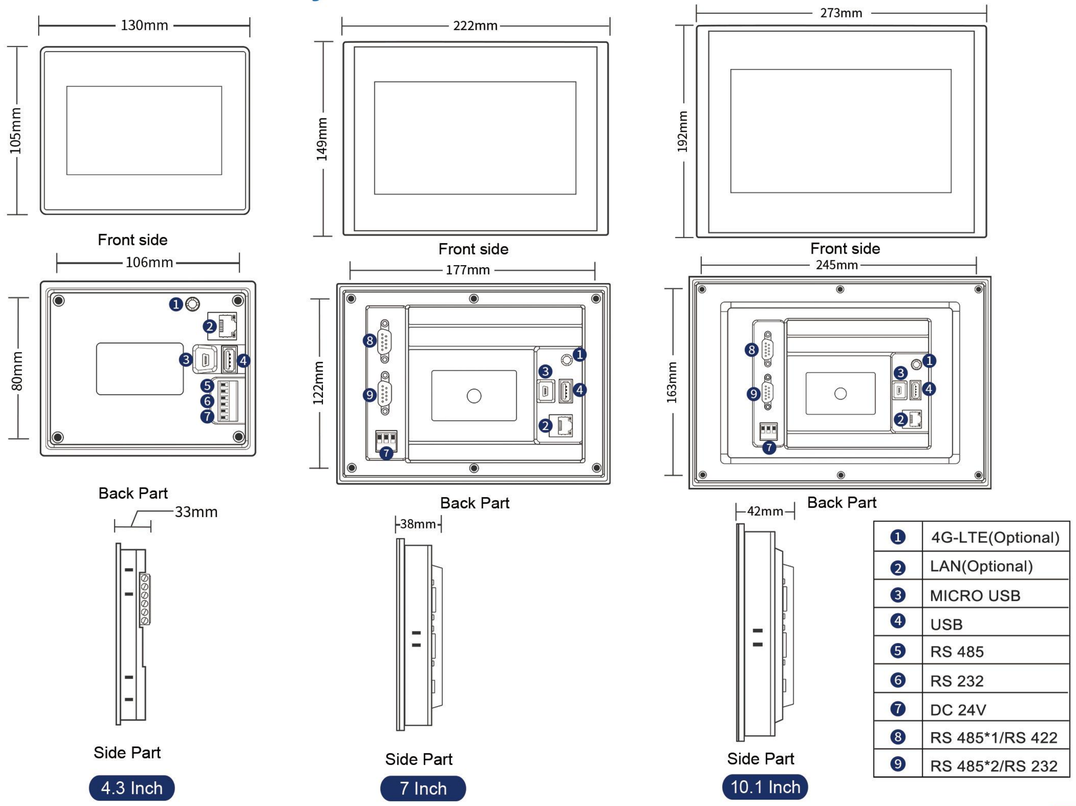

❶	4G-LTE(Optional)
❷	LAN(Optional)
❸	MICRO USB
❹	USB
❺	RS 485
❻	RS 232
❼	DC 24V
❽	RS 485*1/RS 422
❾	RS 485*2/RS 232

Product Selection Table



Side Part



Back Part

Huaqingjun HMI

Product picture	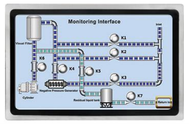		
Model	QJ-A210C-TW/L	QJ-A150C-T4	QJ -A0100T2/4+ QJ-MGC101
Screen size inch	21.5	15	10.1
size(mm)	554.0mm×355.0mm	416.2mm×200.4mm	257.7mm×148.9mm
Cutout Size(mm)	476.6mm×268.1mm	347.5mm×253.9mm	235mm×143mm
Download interface	SD card, USB download, U disk	SD card, USB download, U disk	SD card, USB download, U disk

Huaqingjun HMI

Product picture	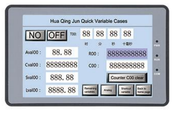		
Model	QJ-A070T2/4+ QJ-MGC070	QJ-A043T2/4+ QJ-MGC043	QJ-A035T4
Screen size inch	7	4.3	3.5
size(mm)	203mm×149mm	140mm×98mm	86.0mm×86.0mm
Cutout Size(mm)	190mm×136mm	130mm×78mm	69.0mm×51.5mm
Download interface	SD card, USB download, U disk	SD card, USB download, U disk	SD card, USB download, U disk

Interface introduction

(4.3 Inch Huaqingjun HMI)

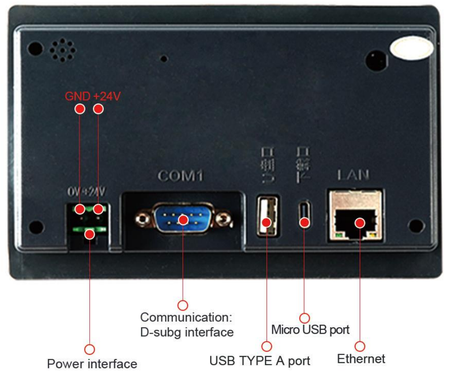



(7-10 Inch Huaqingjun HMI)

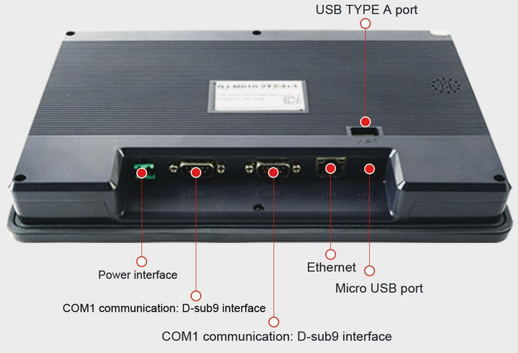



Product Application Cases



Customer's Application 1



Customer's Application 2



Customer's Application 3

Product Selection Table



Front Side



Back Part

Huaqingjun HMI PLC All-in-one				
Product picture				
Model	QJ-P043-12R16IN-T4D	QJ-P043-12T16IN-T4D	QJ-P070-8T16R24IN-T4D	QJ-P070-24T24IN-T4D
Screen size inch	4.3	4.3	7	7
size(mm)	130mm×105mm	130mm×105mm	222mm×149mm	222mm×149mm
Programming method	Ladder compatible with Mitsubishi 3U	Ladder compatible with Mitsubishi 3U	Ladder compatible with Mitsubishi 3U	Ladder compatible with Mitsubishi 3U
Program Download	USB, USB flash drive, direct computer download/U disk	USB, USB flash drive, direct computer download/U disk	USB, USB flash drive, direct computer download/U disk	USB, USB flash drive, direct computer download/U disk

Huaqingjun HMI PLC All-in-one			
Product picture			
Model	QJ-P100-8T22R32IN-T4D	QJ-P100-32R32IN-T4D	QJ-P100-32T32IN-T4D
Screen size inch	10.1	10.1	10.1
size(mm)	86.0mm×86.0mm	86.0mm×86.0mm	86.0mm×86.0mm
Programming method	Ladder compatible with Mitsubishi 3U	Ladder compatible with Mitsubishi 3U	Ladder compatible with Mitsubishi 3U
Program Download	USB, USB flash drive, direct computer download/U disk	USB, USB flash drive, direct computer download/U disk	USB, USB flash drive, direct computer download/U disk

Interface introduction

(4.3 Inch Huaqingjun HMI)

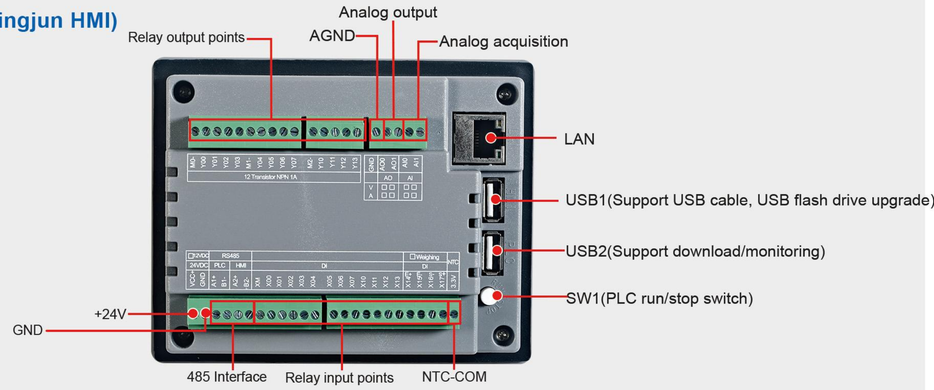

(7-10 Inch Huaqingjun HMI)

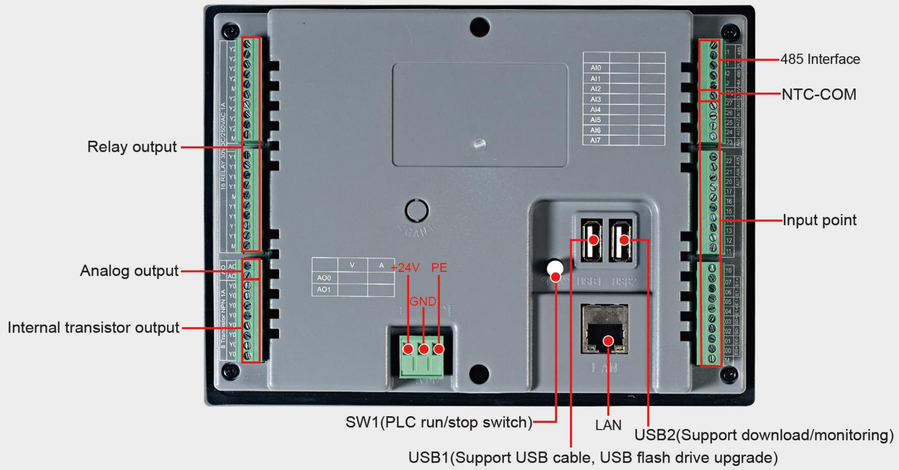

Areas of application

Numerical Control Machine



Intelligent Medical Care



Automatic Production Line





Industrial Control



intelligent teaching and learning

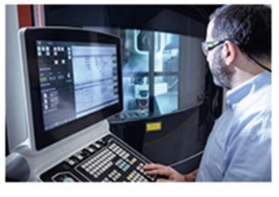

Machine Vision

64-Channel PLC All-in-one Machine

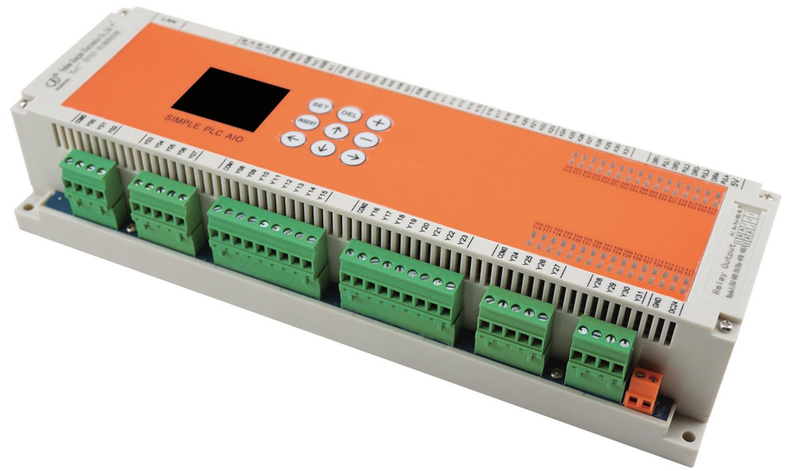

▸ 32-In 32-Out Remote PLC All-in-one Machine

Product Features

1. Computer Software (with RS485 Communication devices)
2. Support logical operations.
3. Run the program regularly to control the output
4. 2-Channel RS485 communication (support master-slave station)
5. Support Chinese/English interface switching;
6. Support logical AND, OR, addition, and subtraction operations;
7. Support 20 groups of programs to work in parallel;
8. Support 25 timers, 50 counters, and 50 time meters;
9. The input point is compatible with NPN and PNP switch signals
10. Support auxiliary coil function, built-in 50 sets of auxiliary contacts
11. Analog input supports unit conversion function, data display is more intuitive
12. Support the expansion output port of all 485 communication modules of our company;
13. Support 19 external registers (access to external devices, realize data exchange and processing)
14. Supports 4-channel pulse outputs, each with an adjustable frequency range of 100Hz~150KHz;
15. Optional 2 channels of 12-bit analog input (0~20mA, 4~20mA, 0~5V, 0~10V signal detection can be realized);
    Optional 2 high-precision analog outputs (0~20mA, 4~20mA, 0~5V, 0~10V output can be realized);
    Optional 2 high-speed pulse output
    Optional RS485-MODBUS-RTU communication
16. Add 2 channels of NTC temperature detection, support the temperature range of 0~100 degrees, directly use the temperature data programming, the temperature is intuitively visible, support the temperature data size judgment and control the output with other common conditions.
17. Support timed charging function

Product Parameter

Item	Parameter	Item	Prameter
Product name	32-In 32-Out Remote PLC All-in-one Machine	Operation button	9 buttons (4 direction buttons, 5 function buttons)
Power supply	DC24V(18~28V fluctuation range)	Time/calendar	Support（accuracy 1S/month25℃±2℃)
Power consumption	5W(DC24V state)	Insulation resistance	not less than 20MΩ(1000VDC)
Working temperature	-10~65℃	Input points	32-channel optocoupler isolated input, compatible NPN and PNP input, voltage 18-28VDC and support passive dry contact signal
Relative humidity	10%RH~90%RH(Non-condensing)		
Storage temperature	-10~65℃	Output points	32-channel relay outputs （Contact capacity：250VAC-5A)
Protection level	IP20		
LCD display	1.8-inch dot matrix LCD screen with LCD backlight		

Product Selection Chart（64-Channel）

Relay Output(Length 298mm*Width108mm*Height 60mm)

Product picture					
Model	QJ-64R-1	QJ-64R-485	QJ-64R-4PUL	QJ-64R-4PUL-485	QJ-64R-2AI2AO
Product description	32-in 32-out relay output PLC	32-in 32-out relay output PLC + 2-channel RS485 communication	32-in 32-out relay output PLC + 4-channel pulse outputs	32-in 32-out relay output PLC + 4-channel pulse outputs + 2-channel RS485	32-in 32-out relay output PLC + 2-channel analog inputs and outputs
Product picture					
Model	QJ-64R-2AI2AO-485	QJ-64R-2AI2AO-4PUL	QJ-64R-2AI2AO-4PUL-485		
Product description	32-in 32-out relay output PLC + 2-channel analog inputs and outputs + 2-channel RS485 communication	32-in 32-out relay output PLC + 2-channel analog inputs and outputs + 4-channel pulse outputs	32-in 32-out relay output PLC + 2-channel analog inputs and outputs + 4-channel pulse outputs + 2-channel RS485 communication		

Transistor Output(Length 298mm*Width 108mm*Height 60mm)

Product picture					
Model	QJ-64T-1	QJ-64T-485	QJ-64T-4PUL	QJ-64T-4PUL-485	QJ-64T-2AI2AO
Product description	32-in 32-out transistor output PLC	32-in 32-out transistor output PLC + 2-channel RS485 communication	32-in 32-out transistor output PLC + 4-channel pulse outputs	16-in 8-out transistor output PLC + 4-channel pulse outputs + 2-channel RS485 communication	32-in 32-out transistor output PLC + 2-channel analog inputs and outputs
Product picture					
Model	QJ-64T-2AI2AO-485	QJ-64T-2AI2AO-4PUL	QJ-64T-2AI2AO-4PUL-485		
Product description	32-in 32-out transistor output PLC + 2-channel analog inputs and outputs + 2-channel RS485 communication	32-in 32-out transistor output PLC + 2-channel analog inputs and outputs + 4-channel pulse outputs	32-in 32-out transistor output PLC + 2-channel analog inputs and outputs + 4-channel pulse outputs + 2-channel RS485 communication		

48-Channel PLC All-in-one Machine



▸ 24-In 24-Out PLC All-in-one Machine

Product Features

1. Computer Software (with RS485 Communication devices)
2. Support logical operations.
3. Run the program regularly to control the output
4. 1-Channel RS485 communication (support master-slave station)
6. Switch to monitor the operation of multiple devices
7. Support Chinese/English interface switching;
8. Support logical AND, OR, addition, and subtraction operations;
9. Support 20 groups of programs to work in parallel;
10. Support 25 timers, 50 counters, and 50 time meters;
11. Support timed charging function
12. Support auxiliary coil function, built-in 50 sets of auxiliary contacts
13. The input point is compatible with NPN and PNP switch signals
14. Analog input supports unit conversion function, data display is more intuitive
15. Support 19 external registers (access to external devices, realize data exchange and processing)
16. Supports 1-channel pulse outputs, each with an adjustable frequency range of 100Hz~150KHz;
17. Support the expansion output port of all 485 communication modules of our company;
18. Optional 2 channels of 12-bit analog input (0~20mA, 4~20mA, 0~5V, 0~10V signal detection can be realized);
    Optional 2 high-precision analog outputs (0~20mA, 4~20mA, 0~5V, 0~10V output can be realized);
    Optional 2 high-speed pulse output
    Optional 1 channels RS485-MODBUS-RTU communication
19. Add 2 channels of NTC temperature detection, support the temperature range of 0~100 degrees, directly use the temperature data programming, the temperature is intuitively visible, support the temperature data size judgment and control the output with other common conditions.

Product Parameter

Item	Parameter	Item	Prameter
Product name	24-In 24-Out Remote PLC All-in-one Machine	Operation button	9 Buttons (4 direction buttons, 5 function buttons)
Power supply	DC24V(18~28V fluctuation range)	Time/calendar	Support（accuracy 1S/month25℃±2℃)
Power consumption	5W(DW24V state)	Insulation resistance	Not less than 20MΩ(1000VDC)
Working temperature	-10~65℃	Input points	24-Channel optocoupler isolated input, compatible NPN and PNP input, voltage 18-28VDC and support passive dry contact signal
Relative humidity	10%RH~90%RH(Non-condensing)		
Storage temperature	-10~65℃	Output points	24-Channel relay outputs （Contact capacity：250VAC-5A)
Protection level	IP20		
LCD display	1.8-Inch dot matrix LCD screen with LCD backlight		

Product Selection Chart（48-Channel）

Relay Output (Length 198mm*Width 108mm*Height 60mm)

Product picture					
Model	QJ-48R-1	QJ-48R-485	QJ-48R-1PUL	QJ-48R-1PUL-485	QJ-48R-2AI2AO
Product description	24-in 24-out relay output PLC	24-in 24-out relay output PLC + RS485 communication	24-in 24-out relay output PLC + 1-channel pulse outputs	24-in 24-out relay output PLC + 1-channel pulse outputs + RS485 communication	24-in 24-out relay output PLC + 2-channel analog inputs and outputs
Product picture					
Model	QJ-48R-2AI2AO-485	QJ-48R-2AI2AO-1PUL	QJ-48R-2AI2AO-1PUL-485		
Product description	24-in 24-out relay output PLC + 2-channel analog inputs and outputs + 1-channel RS485 communication	24-in 24-out relay output PLC + 2-channel analog inputs and outputs + 4-channel pulse outputs	24-in 24-out relay output PLC + 2-channel analog inputs and outputs + 4-channel pulse outputs + 1-channel RS485 communication		

Transistor Output(Length 198mm*Width 108mm*Height 60mm)

Product picture					
Model	QJ-48T-1	QJ-48T-485	QJ-48T-1PUL	QJ-48T-1PUL-485	QJ-48T-2AI2AO
Product description	24-in 24-out transistor output PLC	24-in 24-out transistor output PLC +RS485 communication	24-in 24-out transistor output PLC + 1-channel pulse outputs	24-in 24-out transistor output PLC + 1-channel pulse outputs + RS485 communication	24-in 24-out transistor output PLC + 2-channel analog inputs and outputs
Product picture					
Model	QJ-48T-2AI2AO-485	QJ-48T-2AI2AO-1PUL	QJ-48T-2AI2AO-1PUL-485		
Product description	24-in 24-out transistor output PLC + 2-channel analog inputs and outputs + RS485 communication	24-in 24-out transistor output PLC + 2-channel analog inputs and outputs + 1-channel pulse outputs	24-in 24-out transistor output PLC + 2-channel analog inputs and outputs +1-channel pulse outputs + RS485 communication		

32-Channel PLC All-in-one Machine

16-In 16-Out Remote PLC All-in-one Machine

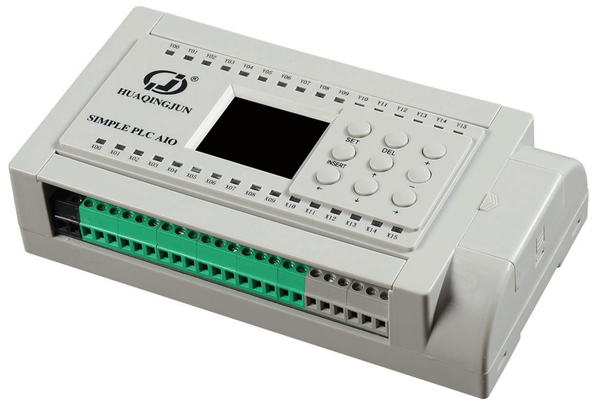

Product Features

1. The program capacity is upgraded to 65 (60 ordinary programs + 3 scanner programs + 1 calendar program).
2. Support remote OTA (PLC can obtain the official upgrade package at any time, and users can update the firmware by themselves)
3. Support arbitrary switching in the middle of pulse output speed.
4. Brand new mobile app, the latest interface is convenient for users to manage multiple PLCs, and supports mobile phone remote control at the same time.

Product Parameter

Item	Simple PLC all-in-one machine		Item	Simple PLC all-in-one machine（Pulse type）	
Output type	Relay type	Transistor type	Output type	Relay type	Transistor type
Power supply	10W (<300mA/ DC24V)The power supply port has reverse connection protection Input voltage is not greaterthan 28V	6W (<200mA/ DC12-24V)The power supply port has reverse connection protection Input voltage is not greater than 33V	Power supply	Relay type（5A 250VAC 5A/250VDC)	12/24V long-term load current 2A, peak 5A
Output form	8/12/16 relays (normally open)	8/12/16 transistors (Open drain output)	Output form	8/12/16 relays (normally open)	8/12/16 transistors (Open drain output)
Output load	5A/250VAC 5A/30VAC	2A/12-24VDC	Output load	5A/250VAC.5A/30VAC	2A/12V-24VDC
Contact life	Electrical life 100,000 times Mechanical life 3 million times	Over 100 million times	Contact life	Electrical life 100,000 times Mechanical life 3 million times	Over 100 million times
Input signal (Optional)	>1mA /DC12-24V is compatible with PNP and NPN switching signals				
Analog input (Optional)	0~20mA, 4~20mA, 0~5V, 0~10V Limit input range: voltage <33V; current <30mA (continuous input value) Mode of operation: direct programming, direct monitoring				
Analog output (Optional)	0~20mA (24V output),4~20mA (24V output),0~5V, 0~10V Mode of operation: direct programming				

Product Selection Chart（32-Channel）

Relay Output(Length 177mm*Width 93mm*Height 43mm)

Product picture					
Model	QJ-32R-1	QJ-32R-485	QJ-32R-2AI	QJ-32R-2AO	QJ-32R-2AI2AO
Product description	16-in 16-out relay output	16-in 16-out relay output with RS485	16-in 16-out relay output + 2-channel analog input	16-in 16-out relay output + 2-channel analog outputs	16-in 16-out relay output + 2-channel analog inputs & outputs
Product picture					
Model	QJ-32R-2AI-485	QJ-32R-2AO-485	QJ-32R-2AI2AO-485		
Product description	16-in 16-out relay output + 2-channel analog inputs + with RS485	16-in 16-out relay output + 2-channel analog outputs + with RS485	16-in 16-out relay output + 2-channel analog inputs & outputs + with RS485		

Transistor Output(Length 177mm*Width 93mm*Height 43mm)

Product picture					
Model	QJ-32T-1	QJ-32T-485	QJ-32T-2AI	QJ-32T-2AO	QJ-32T-2AI2AO
Product description	16-in 16 out transistor output	16-in16-out transistor output with RS485	16-in 16-out transistor output + 2-channel analog inputs	16-in 16-out transistor output + 2-channel analog outputs	16-in 16-out transistor output + 2-channel analog inputs & outputs
Product picture					
Model	QJ-32T-2AI-485	QJ-32T-2AO-485	QJ-32T-2AI2AO-485		
Product description	16-in 16-out transistor output + 2-channel analog inputs + with RS485	16-in 16-out transistor output + 2-channel analog outputs + with RS485	16-in 16-out transistor output + 2-channel analog inputs & outputs + with RS485		

Pulse Type(Length 177mm*Width 93mm*Height 43mm)

Product picture				
Model	QJ-32T-PUL	QJ-32T-2AI-PUL	QJ-32T-2AO-PUL	QJ-32T-2AIAO-PUL
Product description	16-in 16-out transistor output + 2-channel pulse outputs	16-in 16-out transistor output + 2-channel analog inputs and pulse outputs	16-in 16-out transistor output + 2-channel analog outputs and pulse outputs	16-in 16-out transistor output + 2-channel analog inputs & outputs and pulse outputs

24-Channel PLC All-in-one Machine



12-In 12-Out PLC
All-in-one Machine



16-In 8-Out PLC
All-in-one Machine

Product Selection Chart （24-Channel）

Relay Output (Length 177mmXWidth 93mmXHeight 43mm)					
Product picture					
Model	QJ-24R2	QJ-24R2-485	QJ-24R2-4PUL	QJ-24R2-4PUL-485	QJ-24R2-2AI2AO
Product description	16-in 8-out relay output	16-in 8-out relay output + 2-channel RS485 communication	16-in 8-out relay output + 4-channel pulse outputs	16-in 8-out relay output + 4-channel pulse outputs + 2-channel communication	16-in 8-out relay output + 2-channel analog inputs and outputs
Product picture					
Model	QJ-24R2-2AI2AO-485	QJ-24R2-2AI2AO-4PUL	QJ-24R2-2AI2AO-4PUL-485		
Product description	16-in 8-out relay output + 2-channel analog inputs and outputs + 2-channel RS485 communication	16-in 8-out relay output + 2-channel analog inputs and outputs + 4-channel pulse outputs	16-in 8-out relay output + 2-channel analog inputs and outputs + 4-channel pulse outputs + 2-channel RS485 communication		

Product Selection Chart （24-Channel）

Relay Output wifi (Length 148mm*Width 93mm*Height 43mm)					
Product picture					
Model	QJ-24R-1-W	QJ-24R-485-W	QJ-24R-2AI-W	QJ-24R-2AO-W	QJ-24R-2AI2AO-W
Product description	12-in 12-out relay output (wifi)	12-in 12-out relay output with RS485 (wifi)	12-in 12-out relay output + 2-channel analog inputs (wifi)	12-in 12-out relay output + 2-channel analog outputs (wifi)	12-in 12-out relay output + 2-channel analog inputs and outputs (wifi)
Product picture					
Model	QJ-24R-2AI-485-W	QJ-24R-2AO-485-W	QJ-24R-2AI2AO-485-W		
Product description	12-in 12-out relay output + 2-channel analog inputs with RS485 (wifi)	12-in 12-out relay output + 2-channel analog outputs with RS485 (wifi)	12-in 12-out relay output + 2-channel analog inputs and outputs with RS485 (wifi)		

Transistor Output wifi (Length 148mm*Width 93mm*Height 43mm)					
Product picture					
Model	QJ-24T-1-W	QJ-24T-485-W	QJ-24T-2AI-485-W	QJ-24T-2AI2AO-485-W	QJ-24T-2AO-485-W
Product description	12-in 12-out transistor output (wifi)	12-in 12-out transistor output with RS485 (wifi)	12-in 12-out transistor output + 2-channel analog inputs with RS485 (wifi)	12-in 12-out transistor output + 2-channel analog inputs and outputs with RS485 (wifi)	12-in 12-out transistor output + 2-channel analog outputs with RS485 (wifi)
Product picture					
Model	QJ-24T-2AI2AO-W	QJ-24T-2AI-W	QJ-24T-2AO-W		
Product description	12-in 12-out transistor output + 2-channel analog inputs and outputs (wifi)	12-in 12-out transistor output + 2-channel analog inputs (wifi)	12-in 12-out transistor output + 2-channel analog outputs (wifi)		

Product Selection Chart（24-Channel）

Relay Output (Length 148mm*Width 93mm*Height 43mm)					
Product picture					
Model	QJ-24R-1	QJ-24R-485	QJ-24R-2AI	QJ-24R-2AO	QJ-24R-2AI2AO
Product description	12-in 12-out relay output	12-in 12-out relay output with RS485	12-in 12-out relay output + 2-channel analog input	12-in 12-out relay output + 2-channel analog output	12-in 12-out relay output + 2-channel analog input & output
Product picture					
Model	QJ-24R-2AI-485	QJ-24R-2AO-485	QJ-24R-2AI2AO-485		
Product description	12-in 12-out relay output + 2-channel analog inputs + with RS485	12-in 12-out relay output + 2-channel analog outputs + with RS485	12-in 12-out relay output + 2-channel analog inputs & outputs + with RS485		

Transistor Output (Length 148mm*Width 93mm*Height 43mm)					
Product picture					
Model	QJ-24T-1	QJ-24T-485	QJ-24T-2AI	QJ-24T-2AI2AO	QJ-24T-2AI-485
Product description	12-in 12out transistor output	12-in12-out transistor output with RS485	12-in 12-out transistor output + 2-channel analog inputs	12-in 12-out transistor output + 2-channel analog inputs & outputs	12-in 12-out transistor output + 2-channel analog inputs + with RS485
Product picture					
Model	QJ-24T-2AO	QJ-24T-2AI2AO-485	QJ-24T-2AO-485		
Product description	12-in 12-out transistor output + 2-channel analog outputs	12-in 12-out transistor output + 2-channel analog inputs & outputs + with RS485	12-in 12-out transistor output + 2-channel analog outputs + with RS485		

Pulse Type (Length 148mm*Width 93mm*Height 43mm)					
Product picture					
Model	QJ-22R-1PUL-W	QJ-22R-2AI-1PUL-W	QJ-22R-2AO-PUL-W	QJ-22R-2AIAO-1PUL-W	
Product description	12-in 10-out relay output + 1-channel pulse output (wifi)	12-in 10-out relay output + 2-channel analog inputs with 1-channel pulse output (wifi)	12-in 10-out relay output + 2-channel analog outputs with 1-channel pulse output (wifi)	12-in 10-out relay output + 2-channel analog inputs and outputs with 1-channel pulse output (wifi)	
Product picture					
Model	QJ-22R-1PUL	QJ-22R-2AI-1PUL	QJ-22R-2AO-PUL	QJ-22R-2AIAO-1PUL	
Product description	12-in 10-out relay output + 1-channel pulse output	12-in 10-out relay output + 1-channel pulse output + 2-channel analog inputs	12-in 10-out relay output + 1-channel pulse output + 2-channel analog outputs	12-in 10-out relay output + 1-channel pulse output + 2-channel analog inputs & outputs	

16-Channel PLC All-in-one Machine



8-In 8-Out Relay Output PLC All-in-one Machine



8-In 8-Out Transistor Output PLC All-in-one Machine

Product Selection Chart（16-Channel）

Relay Output wifi (Length 148mm*Width 93mm*Height 43mm)					
Product picture					
Model	QJ-16R-1-W	QJ-16R-485-W	QJ-16R-2AI-W	QJ-16R-2AO-W	QJ-16R-2AI2AO-W
Product description	8-in 8-out relay output (wifi)	8-in 8-out relay output with RS485 (wifi)	8-in 8-out relay output + 2-channel analog inputs (wifi)	8-in 8-out relay output +2-channel analog inputs & outputs + with RS485 (wifi)	8-in 8-out relay output + 2-channel analog inputs & outputs (wifi)
Product picture					
Model	QJ-16R-2AI-485-W	QJ-16R-2AO-485-W	QJ-16R-2AI2AO-485-W		
Product description	8-in 8-out relay output + 2-channel analog inputs + with RS485 (wifi)	8-in 8-out relay output + 2-channel analog outputs + with RS485 (wifi)	8-in 8-out relay output + 2 -channel analog inputs & outputs + with RS485 (wifi)		

Product Selection Chart（16-Channel）

8-In 8-Out Transistor Output (wifi)(Length 148mm*Width 93mm*Height 43mm)

Product picture					
Model	QJ-16T-1-W	QJ-16T-485-W	QJ-16T-2AI-W	QJ-16T-2AO-W	QJ-16T-2AI2AO-W
product description	8-in 8-out transistor output (wifi)	8-in 8-out transistor output with RS485 (wifi)	8-in 8-out transistor output + 2-channel analog inputs (wifi)	8-in 8-out transistor output + 2-channel analog outputs (wifi)	8-in 8-out transistor output + 2-channel analog outputs (wifi)
Product picture					
Model	QJ-16T-2AI-485-W	QJ-16T-2AO-485-W	QJ-16T-2AI2AO-485-W		
product description	8-in 8-out transistor output + 2-channel analog outputs (wifi)	8-in 8-out transistor output + 2-channel analog outputs with RS485 (wifi)	8-in 8-out transistor output + 2-channel analog inputs and outputs + with RS485 (wifi)		

PLC with Pulse Outputs (wifi）(Length 148mm*Width 93mm*Height 43mm)

Product picture					
Model	QJ-16R-PUL-W	QJ-16R-2AI-PUL-W	QJ-16R-2AO-PUL-W	QJ-16R-2AI2AO-PUL-W	QJ-16T-PUL-W
product description	8-in 8-out relay output + 2-channel pulse outputs (wifi)	8-in 8-out relay output + 2 -channel analog inputs with pulse outputs (wifi)	8-in 8-out relay output + 2-channel analog outputs with pulse outputs (wifi)	8-in 8-out relay output + 2-channel analog inputs and outputs with pulse outputs (wifi)	8-in 8-out transistor output + 2-channel pulse outputs (wifi)
Product picture					
Model	QJ-16T-2AI-PUL-W	QJ-16T-2AO-PUL-W	QJ-16T-2AI2AO-PUL-W		
product description	8-in 8-out transistor output + 2-channel analog inputs with pulse outputs (wifi)	8-in 8-out transistor output + 2-channel analog outputs with pulse outputs (wifi)	8-in 8-out transistor output + 2-channel analog inputs and outputs with pulse outputs (wifi)		

Ultimate Type Relay Output 16R(Length 148mm*Width 93mm*Height 43mm)

Product picture					
Model	QJ-16R-1	QJ-16R-485	QJ-16R-2AI	QJ-16R-2AO	QJ-16R-2AI2AO
product description	8-in 8-out relay output	8-in 8-out relay output with RS485	8-in 8-out relay output + 2-channel analog input	8-in 8-out relay output + 2-channel analog output	8-in 8-out relay output + 2-channel analog input & output
Product picture					
Model	QJ-16R-2AI-485	QJ-16R-2AO-485	QJ-16R-2AI2AO-485		
product description	8-in 8-out relay output + 2-channel analog inputs + with RS485	8-in 8-out relay output + 2-channel analog inputs + with RS485	8-in 8-out relay output + 2-channel analog inputs & outputs + with RS485		

Ultimate Type Transistor Output 16T(Length 148mm*Width 93mm*Height 43mm)

Product picture					
Model	QJ-16T-1	QJ-16T-485	QJ-16T-2AI	QJ-16T-2AO	QJ-16T-2AI2AO
product description	8-in 8-out transistor output	8-in 8-out transistor output with RS485	8-in 8-out transistor output + 2-channel analog inputs	8-in 8-out transistor output + 2-channel analog outputs	8-in 8-out transistor output + 2-channel analog inputs & outputs
Product picture					
Model	QJ-16T-2AI-485	QJ-16T-2AO-485	QJ-16T-2AI2AO-485		
product description	8-in 8-out transistor output + 2-channel analog inputs + with RS485	8-in 8-out transistor output + 2-channel analog outputs + with RS485	8-in 8-out transistor output + 2-channel analog inputs & outputs + with RS485		

Pulse Type Simple PLC(Length 148mm*Width 93mm*Height 43mm)

Product picture					
Model	QJ-16R-PUL	QJ-16R-2AI-PUL	QJ-16R-2AO-PUL	QJ-16R-2AI2AO-PUL	QJ-16T-PUL
product description	8-in 8-out relay output + 2-channel pulse outputs	8-in 8-out relay output + 2-channel analog inputs and pulse outputs	8-in 8-out relay output + 2-channel analog outputs and pulse outputs	8-in 8-out relay output + 2-channel analog inputs & outputs and pulse outputs	8-in 8-out transistor output + 2-channel pulse outputs
Product picture					
Model	QJ-16T-2AI-PUL	QJ-16T-2AO-PUL	QJ-16T-2AI2AO-PUL		
product description	8-in 8-out transistor output + 2-channel analog inputs and pulse outputs	8-in 8-out transistor outp ut + 2-channel analog outputs and pulse outputs	8-in 8-out transistor output + 2-channel analog inputs & outputs and pulse outputs		

Wiring Diagram of PLC all-in-one Machine

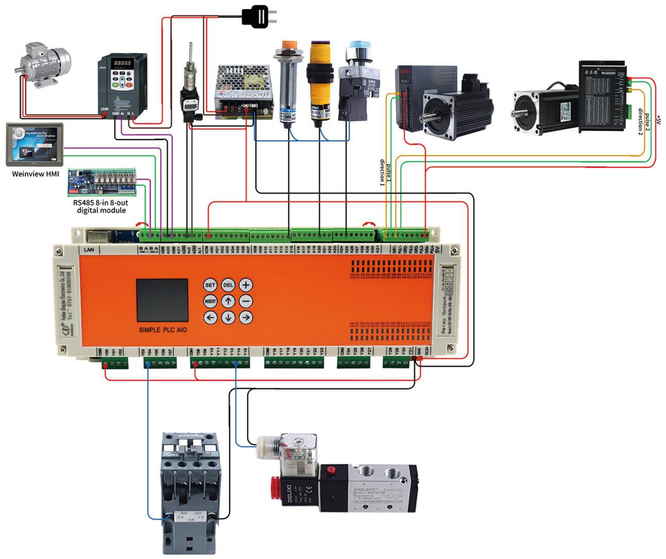

32-in 32-out Remote PLC all-in-one Machine

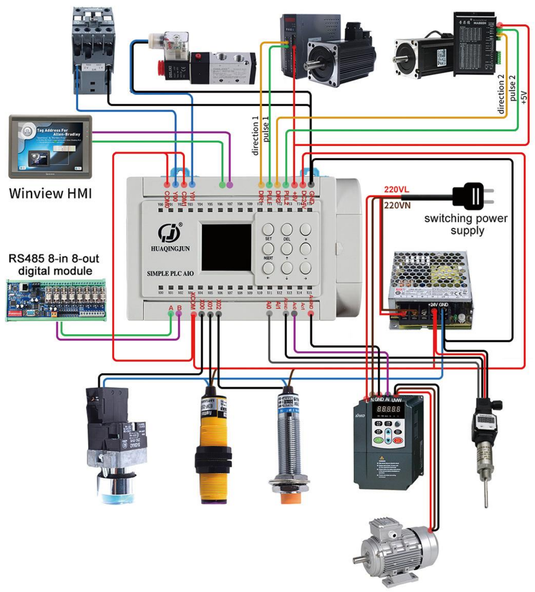

16-in 8-out Remote PLC all-in-one Machine

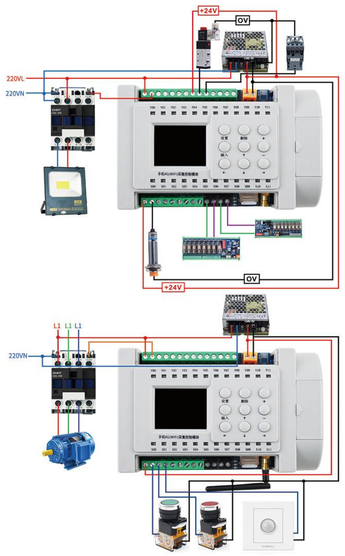

12-in 8-out Remote PLC all-in-one Machine

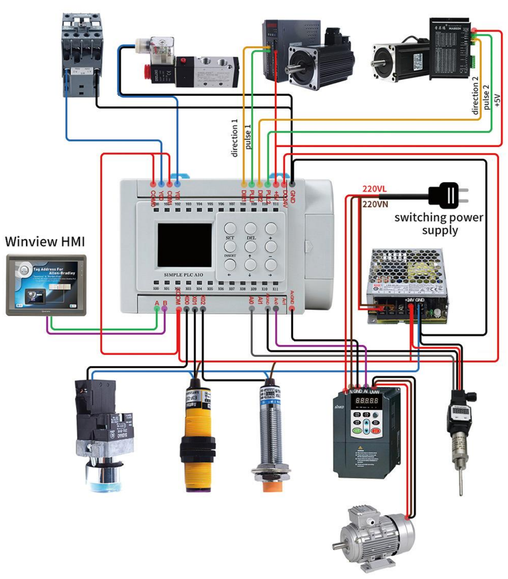

12-in 12-out PLC all-in-one Machine

Wring Diagram of RS485 Communication Module

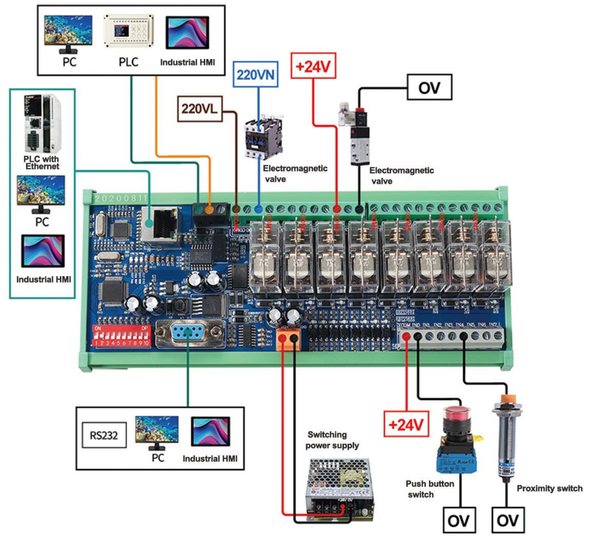

Wiring Diagram of 8-Channel 485 232 Ethernet Omron IO Module (1NO 1NC)

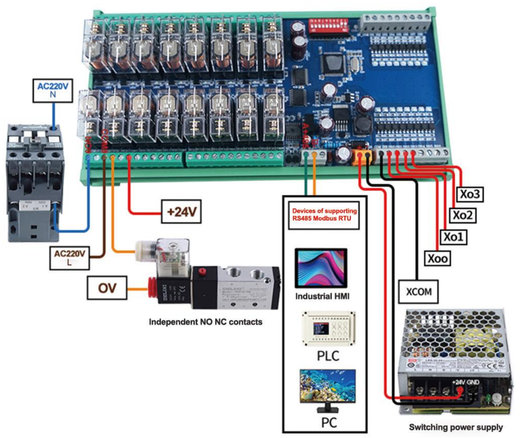

Wiring Diagram of 8-Channel RS485 Inputs and Outputs Relay Module

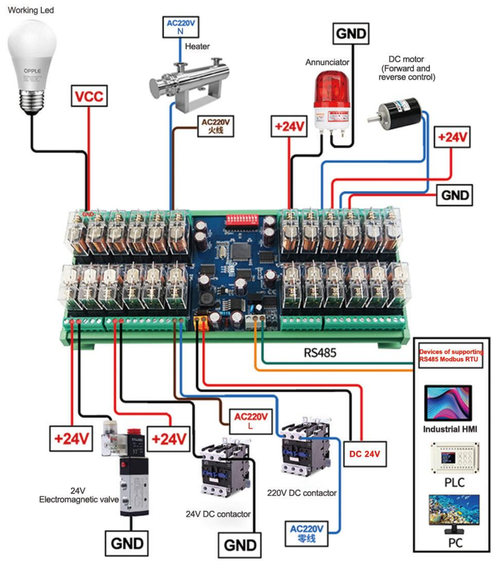

Wring Diagram of 24-Channel RS485 Communication Relay Module

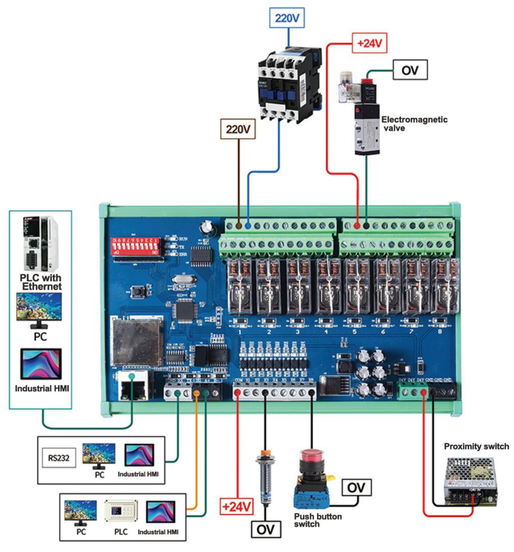

Wiring Diagram of 8-Channel RS485 232 Ethernet Omron IO Ethernet Module（2NO 2NC）

PLC-3U



Product Performance Characteristics

1.Compatible with 3U instruction set Program capacity 16000 steps

2.Analog Input/Output (Current input range: 0~25mA (3~28VDC)
Current output range: 0~20mA (24VDC), Voltage input range: 0~10VDC
Voltage output range: 0~10VDC (<=20mA)

3.Analog input support for 2-wire/3-wire sensors

4.Support 2-channel NTC temperature sensor (need to note NCT model)

5.Support two independent 485 communication, can be connected to various brands of touch screen, more can be combined with the store's 485 products Extension of D1, DO, PT100, AC current/voltage acquisition, analog acquisition/output points (support ADPRW instruction)

6.Support one way RS232, can be connected to the touch screen

7.Supports GXWork2 programming software

8.Support 2 high speed pulse inputs, AB phase encoder (1~150K)

9.Supports power-down saving of some soft components

10.Support for saving Chinese comments

11.Built-in real-time clock, perpetual calendar

12.Support 1 channel 10/100M network interface MODBUS-TCP protocol (can connect peripherals that support this protocol)

Product Parameter

Item	Relay Type	Transistor Type
Output type	Relay output type (AC250V 3A/DC30V3A)	Transistor output type(DC 24V/3A)
Operating current	<600MA	<300MA
Pulse output	No	4-Channel/8-channel 100KHZ
Operating voltage	19~28V(Optional 12V)	
Communication interface	232*1、485*1、485*2	
LAN	MODBUS-TCP	
Operating temperature	-20~65°C	
Operating humidity	5~80%RH(No condensation)	
Low Voltage Protection Voltage	19V(24V version)/9V(12V version)	

Product Selection Chart

Relay Type					
Product picture					
Model	QJ-3U8MR-T2	QJ-3U8MR-T2/4	QJ-3U16MR-T2/4*2	QJ-3U16MR-2AiV2AOV-T2/4*2	QJ-3U16MR-2Aii2AOi T2/4*2
Product description	4DI 4DO relay output PLC 1-channel 232	4DI 4DO relay output PLC 1-channel 232 1-channel RS485	8DI 8DO relay output PLC+2-channel RS485+1-channel 232	8DI 8DO relay output PLC+2-channel RS485+1-channel 232 +2AI 2AO 0-10V	8DI 8DO relay output PLC+2-channel RS485+1-channel 232 +2AI 2AO 4-20mA
Product picture					
Model	QJ-3U16MR-T4*2/L	QJ-3U16MR-2AiV2AOV-T4*2/L	QJ-3U16MR-2Aii2AOi-T4*2/L	QJ-3U32MR-T2/4*2	QJ-3U32MR-2AIV2AOV-T2/4*2
Product description	8DI 8DO relay output PLC+LAN 2-channel RS485	8DI 8DO relay output PLC+2-channel RS485+LAN+2AI 2AO 0-10V	8DI 8DO relay output PLC+2-channel RS485 +LAN+2AI 2AO 4-20mA	16DI 16DO relay output PLC+2-channel RS485 + 1-channel 232	16DI 16DO relay output PLC+2-channel RS485+1-channel 232 +2AI 2AO 0-10V
Product picture					
Model	QJ-3U32MR-2Aii2AOi T2/4*2	QJ-3U32MR-2AiV2AOV-T4*2/L	QJ-3U32MR-2Aii2AOi-T4*2/L	QJ-3U32MR-2AIV2AOV-T2/4*2/L-8PUL	QJ-3U32MR-2Aii2AOi-T2/4*2-8PUL
Product description	16DI 16DO relay output PLC+2-channel RS485+1-channel 232 +2AI 2AO 4-20mA	16DI 16DO relay output PLC+2-channel RS485+1-channel 232 +LAN + 2AI 2AO 0-10V	16DI 16DO relay output PLC+2-channel RS485+1-channel 232 +LAN + 2AI 2AO 4-20mA	16DI 16DO(12-channel relay outputs+4-channel pulse outputs)PLC+2-channel RS485+1-channel 232+LAN+2AI 2AO 0-10V	16DI 16DO(12-channel relay outputs+4-channel pulse outputs)PLC+2-channel RS485+1-channel 232+LAN+2AI 2AO 4-20mA
Product picture					
Model	QJ-3U48MR-T2/4*2	QJ-3U48MR-2AIV2AOV-T2/4*2	QJ-3U48MR-2Aii2AOi T2/4*2	QJ-3U48MR-2AiV2AOV-T2/4*2/L	QJ-3U48MR-2Aii2AOi-T2/4*2/L
Product description	24DI 24DO relay output PLC+2-channel RS485+1-channel 232	24DI 24DO relay output PLC+2-channel RS485+1-channel 232 +2AI 2AO 0-10V	24DI 24DO relay output PLC+2-channel RS485+1-channel 232 +2AI 2AO 0-10V	24DI 24DO relay output PLC+2-channel RS485+1-channel 232 +LAN + 2AI 2AO 0-10V	24DI 24DO relay output PLC+2-channel RS485+1-channel 232 +LAN + 2AI 2AO 4-20mA
Product picture					
Model	QJ-3U48MR-2AiV2AOV-T2/4*2/L-8PUL	QJ-3U48MR-2Ai2AOi-T2/4*2/L-8PUL	QJ-3U64MR-T2/4*2	QJ-3U64MR-2AiV2AOV-T2/4*2	QJ-3U64MR-2Aii2AOi T2/4*2
Product description	24DI 24DO(16-channel relay outputs+8-channel pulse outputs)PLC+2-channel RS485+1-channel 232+LAN+2AI 2AO 0-10V	24DI 24DO(16-channel relay outputs+8-channel pulse outputs)PLC+2-channel RS485+1-channel 232+LAN+2AI 2AO 4-20mA	32DI 32DO relay output PLC+2-channel RS485+1-channel 232	32DI 32DO relay output PLC+2-channel RS485 + 1-channel 232 + 2AI 2AO 0-10V	32DI 32DO relay output PLC+2-channel RS485 + 1-channel 232 + 2AI 2AO 4-20mA
Product picture					
Model	QJ-3U64MR-2AiV2AOV-T2/4*2/L	QJ-3U64MR-2Aii2AOi-T2/4*2/L	QJ-3U64MR-2AiV2AOV-T2/4*2/L-8PUL	QJ-3U64MR-2Aii2AOi-T2/4*2/L-8PUL	
Product description	32DI 32DO relay output PLC+2-channel RS485 + 1-channel 232 + LAN + 2AI 2AO 0-10V	32DI 32DO relay output PLC+2-channel RS485 + 1-channel 232 + LAN + 2AI 2AO 4-20mA	32DI 32DO(24-channel relay outputs+8-channel pulse outputs)PLC+2-channel RS485+1-channel 232+LAN+2AI 2AO 0-10V	32DI 32DO(24-channel relay outputs+8-channel pulse outputs)PLC+2-channel RS485+1-channel 232+LAN+2AI 2AO 4-20mA	

Product Selection Chart

Product picture					
Model	QJ-3U8MT-T2-4PUL	QJ-3U8MT-T2/4-4PUL	QJ-3U16MT-T2/4*2-8PUL	QJ-3U16MT-2AIV2AOV-T2/4*2-8PUL	QJ-3U16MT-2Aii2AOi-T2/4*2-8PUL
Product description	4DI 4DO transistor output PLC 1-channel 232 4-channel pulse outputs	4DI 4DO transistor output PLC 1-channel 232 1-channel RS485 4-channel pulse outputs	8DI 8DO transistor output PLC +2-channel RS485+1-channel 232+8-channel pulse outputs	8DI 8DO transistor output PLC +2-channel RS485+1-channel 232+2AI 2AO 0-10V + 8-channel pulse outputs	8DI 8DO transistor output PLC+2-channel RS485+1-channel 232+2AI 2AO 0-10V+8-channel pulse outputs
Product picture					
Model	QJ-3U16MT-T4*2/L-8PUL	QJ-3U16MT-2AiV2AOV-T4*2/L-8PUL	QJ-3U16MT-2Aii2AOi-T4*2/L-8PUL	QJ-3U32MT-T2/4*2	QJ-3U32MT/2/4*2/L+8PUL
Product description	8DI 8DO transistor output PLC+LAN 2-channel RS485 8-channel pulse outputs	8DI 8DO transistor output PLC+2-channel RS485 +LAN+2AI 2AO 0-10V+8-channel pulse outputs	8DI 8DO transistor output PLC+2-channel RS485 +LAN+2AI 2AO 4-20mA+8-channel pulse outputs	16DI 16DO transistor output PLC +2-channel RS485+1-channel 232	16DI 16DO transistor output PLC +2-channel RS485+1-channel 232 +LAN+4-channel pulse outputs
Product picture					
Model	QJ-3U32MT-2AiV2AOV-T2/4*2	QJ-3U32MT-2Aii2AOi-T2/4*2	QJ-3U32MT-2AiV2AOV-T2/4*2/L	QJ-3U32MT-2Aii2AOi-T2/4*2/L	QJ-3U32MT-2AiV2AOV-T2/4*2/L-8PUL
Product description	16DI 16DO transistor output PLC +2-channel RS485+1-channel 232 +2AI 2AO 0-10V	16DI 16DO transistor output PLC +2-channel RS485+1-channel 232 +2AI 2AO 4-20mA	16DI 16DO transistor output PLC+2-channel RS485+1-channel 232 +LAN+2AI 2AO 0-10V	16DI 16DO transistor output PLC+2-channel RS485+1-channel 232 +LAN+2AI 2AO 4-20mA	16DI 16DO(8-channel transistor outputs +8-channel pulse outputs)PLC+2-channel RS485+1-channel 232+LAN+2AI 2AO 0-10V
Product picture					
Model	QJ-3U32MT-2Aii2AOi-T2/4*2/L-8PUL	QJ-3U48MT-T2/4*2-8PUL	QJ-3U48MT-2AiV2AOV-T2/4*2-8PUL	QJ-3U48MT-2Aii2AOi-T2/4*2-8PUL	QJ-3U48MT-2AiV2AOV-T2/4*2/L-8PUL
Product description	16DI 16DO(8-channel transistor outputs +8-channel pulse outputs)PLC+2-channel RS485+1-channel 232+LAN+2AI 2AO 4-20mA	24DI 24DO transistor output PLC+2-channel RS485+1-channel 232 +8-channel pulse outputs	24DI 24DO transistor output PLC+2-channel RS485+1-channel 232 +2AI 2AO 0-10V+8-channel pulse outputs	24DI 24DO transistor output PLC+2-channel RS485+1-channel 232 +2AI 2AO 4-20mA+8-channel pulse outputs	24DI 24DO transistor output PLC +2-channel RS485+1-channel 232 +LAN+2AI 2AO 0-10V+8-channel pulse outputs
Product picture					
Model	QJ-3U48MT-2Aii2AOi-T2/4*2/L-8PUL	QJ-3U64MT-T2/4*2-8PUL	QJ-3U64MT-2AIV2AOV-T2/4*2-8PUL	QJ-3U64MT-2Aii2AOi-T2/4*2-8PUL	QJ-3U64MT-2AiV2AOV-T2/4*2/L-8PUL
Product description	24DI 24DO transistor output PLC +2-channel RS485+1-channel 232 +LAN+2AI 2AO 4-20mA+8-channel pulse outputs	32DI 32DO transistor output PLC +2-channel RS485+1-channel 232 +8-channel pulse outputs	32DI 32DO transistor output PLC +2-channel RS485+1-channel 232 +2AI 2AO 0-10V+8-channel pulse outputs	32DI 32DO transistor output PLC +2-channel RS485+1-channel 232 +2AI 2AO 4-20mA+8-channel pulse outputs	32DI 32DO transistor output PLC +2-channel RS485+1-channel 232 +LAN+2AI 2AO 0-10V+8-channel pulse outputs
Product picture					
Model	QJ-3U64MT-2AII2AOI-T2/4*2/L-8PUL				
Product description	32DI 32DO transistor output PLC +2-channel RS485+1-channel 232 +LAN+2AI 2AO 4-20mA+8-channel pulse outputs				

Siemens Expansion Modules



Product Parameters

Output type: relay type / transistor type

Current consumption: 200mA (8-channel relay output type) 380 (16-channel relay output type)

Input opto-isolated voltage: 1500VDC

Operating voltage: DC24V(20~28VDC)

Input collection low level range: 0~5VDC

Input capture high level range: 16~30VDC

Input collection current: <5mA

Output current: 2A/way

Output form: high output

Product Selection Chart

Relay Type/Transistor Type					
Product picture					
Model	QJ-S7-1PH22-16R	QJ-S7-1PH22-32R	QJ-S7-223-1BH22-16T	QJ-S7-223-1BL22-32T	
size(mm)	71mmX81mmX83mm	137mmX81mmX62mm	71mmX81mmX83mm	134mmX81mmX62mm	
Product description	8-Channel Standard IO Expansion Siemens Expansion Module Relay Type	16-Channel Standard IO Expansion Siemens Expansion Module Relay Type	8-Channel Standard IO Expansion Siemens Expansion Module Transistor Type	16-Channel Standard IO Expansion Siemens Expansion Module Transistor Type	

Weighing Series RS485 Module



▸ 12-Channel Weighing RS485 Communication Module

Product Parameter

1. Simultaneous acquisition of multiple weighing sensors, ideal for multi-hopper, multi-station & multi-channel weighing.
2. RS485 with Modbus RTU, easily connects to PLC, HMI and upper computer.
3. Independent calibration, tare & filtering per channel, flexible field commissioning.
4. Built-in zero tracking, creep compensation & stability processing for stable weighing data.
5. Support weight calibration and sensor theoretical parameter calibration.
6. Address, baud rate and parity configurable via DIP switches, easy installation & maintenance.
7. Parameters power-down saved, no reconfiguration after restart.
8. Supplied with dedicated upper computer software for setup & monitoring.
9. Compatible with multiple sensors.
10. High precision, fast speed.
11. Support weight calibration & weightless calibration, flexible usage.
12. True full isolation design.

Product Selection Table

RS485 Weighing Digital Transmitter						
Product picture						
Model	QJ-WT-02RS485I	QJ-WT-04RS485I	QJ-WT-06RS485I	QJ-WT-08RS485I	QJ-WT-12RS485I	QJ-WT-16RS485I
Size(mm)	77mmX105mmX27mm	100mmX105mmX27mm	121mmX105mmX27mm	143mmX105mmX27mm	187mmX105mmX27mm	230mmX105mmX27mm
Product name	4-Channel Weighing RS485 Communication Module.	4-Channel Weighing RS485 Communication Module.	6-Channel Weighing RS485 Communication Module.	8-Channel Weighing RS485 Communication Module.	12-Channel Weighing RS485 Communication Module.	16-Channel Weighing RS485 Communication Module.

LoRa Data Transmission Module



▸ LoRa Data Transmission Module

Product Parameter

1.Data Buffer：Maximum packet length: 240 bytes Buffer capacity: 8192 bytes
2.Air Data Rate：Range300～15,500 kbps
3.Blocking Power：10 dBm
4.Operating Temperature：-40 °C～+75 °C (Industrial Grade Standard)
5.Operating Humidity：10～90% RH
6.Operating Temperature:-40°Cto +85°C
7.Storage Temperature：-40 °C～+85 °C
8.Antenna Interface：Standard SMA Interface (Impedance 50Ω)
9.Frequency Range：410 MHz～520 MHz
10.Transmission Mode：Half-duplex Communication

Product Selection Table

LoRa Data Transmission Module		
product picture		
Model	QJ-LTS-M-4	QJ-LTS-M-6
Size(mm)	Length104XWidth104.5XHeight26	Length104XWidth104.5XHeight26
Product Description	LoRa Data Transmission Communication Module Communication Distance 4 km	LoRa Data Transmission Communication Module Communication Distance 6 km

RS485 Boxed Module

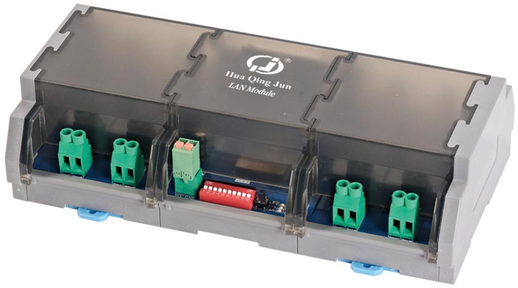

▸ 8-channel RS485 LAN 50A Relay Output Module



▸ 12-channel RS485 LAN 50A Relay Output Module+LORA

Product Benefits

1.Optional communication interfaces: RS485/WIFI/4G/LAN
2.Matte black frosted transparent shell internal status at a glance
3.Space-saving modular design for easy cascading
4.Fully spring-loaded terminals for easier wiring
5.Dustproof design
6.Standard rail mounting
7.Fully isolated communication design (communication distance >1000 meters twisted pair at 9600bps)
8.Anti-surge design
9.Indicator: Output Power Communication Timeout
10.Independent setting of operating modes for each channel
11.Professional testing softwareation fault/timeout.
12.Retains physical dip switch settings for easy maintenance
13.Baud rate 1200~115200
14.Control Current:50A (HF165F-50A relay)
15.Control Voltage:Both AC and DC are available
16.Electrical durability:30,000 operations (at 35A, 250VAC, resistive load, 80°C, 1 second ON, 9 seconds OFF)
17.Operalting temperature:-37 to 75℃
18.Oparating humidity:<90%

1. 50A Relay Module (Slave)
2. 8-channel ... 32-channel, multiple channel options available (subject to available models)
3. LORA wireless communication (unobstructed default range: 2km, 410.125~520MHz)
4. The LORA wireless section adopts standard MODBUS RTU protocol
5. Original 3dbi 433MHz antenna supplied
6.It can be paired with boxed relay modules with DI input function to realize local button control of remote 50A relay module (one-to-one control)
7. Optional "LORA to 485 wireless radio" of our company. After networking, the following functions can be realized:
i: PLC bidirectional read/write of multiple 50A LORA relay modules
ii: HMI bidirectional read/write of multiple 50A LORA relay modules
iii: PC control of multiple 50A LORA relay modules
8. Reserved 485 communication interface, supporting standard MODBUS RTU protocol
9. Equipped with upper computer software; parameters can be conveniently configured via 485 port

Product Selection Table

RS485 50A Relay Output Module					
product picture					
model	QJ-N4H50A-T4	QJ-N8H50A-T4	QJ-N12H50A-T4	QJ-N16H50A-T4	QJ-N20H50A-T4
size(mm)	163mmX125mmX60mm	237mmX125mmX60mm	310mmX125mmX60mm	383mmX125mmX60mm	456mmX125mmX60mm
Product Description	4-channel RS485 50A Relay Output Module	8-channel RS485 50A Relay Output Module	12-channel RS485 50A Relay Output Module	16-channel RS485 50A Relay Output Module	20-channel RS485 50A Relay Output Module

RS485 LAN 50A Relay Output Module					
product picture					
model	QJ-N24H50A-T4	QJ-N4H50A-T4	QJ-N4H50A-T4L	QJ-N8H50A-T4L	QJ-N12H50A-T4L
size(mm)	530mmX125mmX60mm	688mmX125mmX60mm	163mmX125mmX60mm	237mmX125mmX60mm	310mmX125mmX60mm
Product Description	24-channel RS485 50A Relay Output Module	32-channel RS485 50A Relay Output Module	4-channel RS485 LAN 50A Relay Output Module	8-channel RS485 LAN 50A Relay Output Module	12-channel RS485 LAN 50A Relay Output Module
product picture					
model	QJ-N16H50A-T4L	QJ-N20H50A-T4L	QJ-N24H50A-T4L	QJ-N32H50A-T4L	
size(mm)	383mmX125mmX60mm	456mmX125mmX60mm	530mmX125mmX60mm	688mmX125mmX60mm	
Product Description	16-channel RS485 LAN 50A Relay Output Module	20-channel RS485 LAN 50A Relay Output Module	24-channel RS485 LAN 50A Relay Output Module	32-channel RS485 LAN 50A Relay Output Module	

RS485 LAN 50A Relay Output Module+LORA				
product picture				
model	QJ-N4H50A-T4R	QJ-N8H50A-T4R	QJ-N12H50A-T4R	QJ-N16H50A-T4R	QJ-N20H50A-T4R
size(mm)	163mmX125mmX60mm	237mmX125mmX60mm	310mmX125mmX60mm	383mmX125mmX60mm	456mmX125mmX60mm
Product Description	4-channel RS485 50A Relay Output Module +LORA	8-channel RS485 50A Relay Output Module +LORA	12-channel RS485 50A Relay Output Module +LORA	16-channel RS485 50A Relay Output Module +LORA	20-channel RS485 50A Relay Output Module +LORA
product picture					
model	QJ-N24H50A-T4R	QJ-N4H50A-T4			
size(mm)	530mmX125mmX60mm	688mmX125mmX60mm			
Product Description	24-channel RS485 50A Relay Output Module +LORA	32-channel RS485 50A Relay Output Module +LORA			

RS485 Boxed Module



▸ RS485 communication output boxed

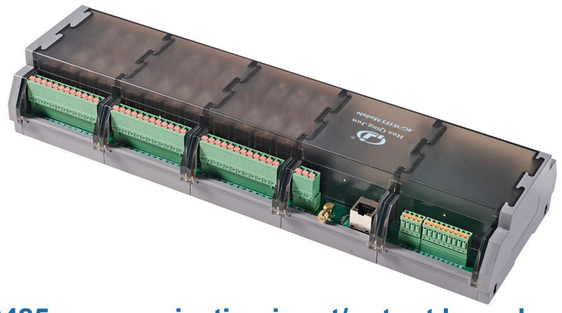

▸ RS485 communication input/output boxed set

Product Benefits

1.Optional communication interfaces: RS485/RS232/WIFI/4G/LAN

2.Matte black frosted transparent shell internal status at a glance

3.Space-saving modular design for easy cascading

4.Fully spring-loaded terminals for easier wiring

5.Dustproof design

6.Standard rail mounting

7.Fully isolated communication design (communication distance >1000 meters twisted pair at 9600bps)

8.Anti-surge design

9.Indicator: Output Power Communication Timeout

10.Independent setting of operating modes for each channel

11.Professional testing softwareation fault/timeout.

12.Retains physical dip switch settings for easy maintenance

13.Baud rate 1200~115200,230400bps

14.Station number setting range 0~250

15.Support broadcast function broadcast address default 251 (you can specify whether to output the return code in the broadcast state)

16.Working power:12VDC 24VDC optional

17.Relay capacity 10A/250VAC 10A/30VDC

18.Optional Omron/IDEC/Hongfa/Panasonic relays available

Product Selection Table

RS485 Output Module					
Product picture					
Model	QJ-N4O1Z-T4	QJ-N8O1Z-T4	QJ-N12O1Z-T4	QJ-N16O1Z-T4	QJ-N20O1Z-T4
Size(mm)	163mmX90mmX60mm	237mmX90mmX60mm	310mmX90mmX60mm	383mmX90mmX60mm	456mmX90mmX60mm
Product name	4-channel Omron output 485 communication module	8-channel Omron output 485 communication module	12-channel Omron output 485 communication module	16-channel Omron output 485 communication module	20-channel Omron output 485 communication module
Product picture					
Model	QJ-N24O1Z-T4	QJ-N32O1Z-T4	QJ-N40O1Z-T4	QJ-N48O1Z-T4	
Size(mm)	310mmX125mmX60mm	382mmX125mmX60mm	455mmX125mmX60mm	529mmX125mmX60mm	
Product name	24-channel Omron output 485 communication module	32-channel Omron output 485 communication module	40-channel Omron output 485 communication module	48-channel Omron output 485 communication module	

RS485 Output Module+LAN					
Product picture					
Model	QJ-N4O1Z-T4L	QJ-N8O1Z-T4L	QJ-N12O1Z-T4L	QJ-N16O1Z-T4L	QJ-N20O1Z-T4L
Size(mm)	163mmX90mmX60mm	237mmX90mmX60mm	310mmX90mmX60mm	383mmX90mmX60mm	456mmX90mmX60mm
Product name	4-channel Omron output 485 communication module+LAN	8-channel Omron output 485 communication module+LAN	12-channel Omron output 485 communication module+LAN	16-channel Omron output 485 communication module+LAN	20-channel Omron output 485 communication module+LAN
Product picture					
Model	QJ-N24O1Z-T4L	QJ-N32O1Z-T4L	QJ-N40O1Z-T4L	QJ-N48O1Z-T4L	
Size(mm)	310mmX125mmX60mm	382mmX125mmX60mm	455mmX125mmX60mm	529mmX125mmX60mm	
Product name	24-channel Omron output 485 communication module+LAN	32-channel Omron output 485 communication module+LAN	40-channel Omron output 485 communication module+LAN	48-channel Omron output 485 communication module+LAN	

Product Selection Table

RS485 Inputs and Outputs Module					
Product picture					
Model	QJ-N4O1Z-4DI-T4	QJ-N8O1Z-8DI-T4	QJ-N12O1Z-12DI-T4	QJ-N16O1Z-16DI-T4	QJ-N20O1Z-20DI-T4
Size(mm)	163mmX90mmX60mm	163mmX125mmX60mm	237mmX125mmX60mm	310mmX125mmX60mm	310mmX125mmX60mm
Product name	4-channel Omron input outp ut 485 communication module	8-channel Omron input outp ut 485 communication module	12-channel Omron input outp ut 485 communication module	16-channel Omron input outp ut 485 communication module	20-channel Omron input outp ut 485 communication module
Product picture					
Model	QJ-N24O1Z-24DI-T4	QJ-N32O1Z-24DI-T4			
Size(mm)	383mmX125mmX60mm	455mmX125mmX60mm			
Product name	24-channel Omron input outp ut 485 communication module	32-channel Omron input outp ut 485 communication module			

RS485 Inputs and Outputs Module+LAN					
Product picture					
Model	QJ-N4O1Z-4DI-T4L	QJ-N8O1Z-4DI-T4L	QJ-N12O1Z-4DI-T4L	QJ-N16O1Z-4DI-T4L	QJ-N20O1Z-4DI-T4L
Size(mm)	163mmX90mmX60mm	163mmX125mmX60mm	237mmX125mmX60mm	310mmX125mmX60mm	310mmX125mmX60mm
Product name	4-channel Omron input outp ut 485 communication module +LAN	8-channel Omron input outp ut 485 communication module +LAN	12-channel Omron input outp ut 485 communication module +LAN	16-channel Omron input outp ut 485 communication module +LAN	20-channel Omron input outp ut 485 communication module +LAN
Product picture					
Model	QJ-N24O1Z-24DI-T4L	QJ-N32O1Z-32DI-T4L			
Size(mm)	383mmX125mmX60mm	455mmX125mmX60mm			
Product name	24-channel Omron input outp ut 485 communication module +LAN	32-channel Omron input outp ut 485 communication module +LAN			

RS485 Communication Digital Output Module

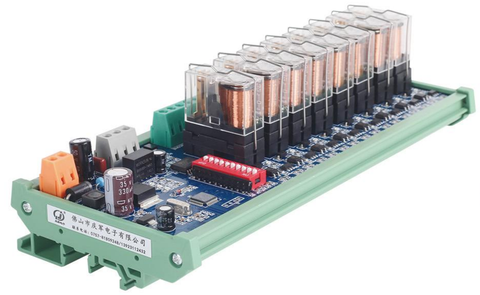

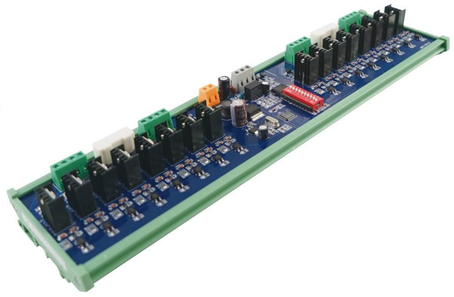

- RS485 Communication Relay Output Module
- RS485 Communication DC Amplifier Board

Relay Output Rarameter

Working voltage： Befault 24V ； 12V(optional)

Reverse connection protection：All products are supported

Whether to isolate： Fully isolated

Isolation voltage： ±1500V

Communication Protocol：Modbus-RTU

Maximum transmission distance:> 1000 Meters (twisted pair)

Limit Voltage： 24V(18~30V) / 12V(10~15V)

Baud rate：1200,4800,9600,38400,19200,57600,115200

Shield terminal: Support

Data format: 1 Start bit 8 data bits parity check 1 stop bit or 2 stop bits

Maximum number of nodes: 32 Modules shared bus

Product Selection Table

RS485 Communication Series					
Product picture				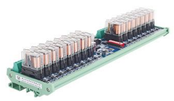	
Model	QJ-4RGT-O1Z-12V/24V	QJ-8RGT-O1Z-12V/24V	QJ-12RGT-O1Z-12V/24V	QJ-16RGT-O1Z-12V/24V	QJ-20RGT-O1Z-12V/24V
Size(mm)	13mmX87mmX65mm	200mmX87mmX65mm	264mmX87mmX65mm	327mmX87mmX65mm	270mmX120mmX65mm
Product name	4-channel Omron 485 comunication module	8-channel Omron 485 comunication module	12-channel Omron 485 comunication module	16-channel Omron 485 comunication module	20-channel Omron 485 comunication module
Product picture					
Model	QJ-24RGT-O1Z-12V/24V	QJ-32RGT-O1Z-12V/24V	QJ-64O1Z-TL/4-12V/24V	QJ-4RG-T2/4-16A/24V	QJ-8RG-T2/4-16A/24V
Size(mm)	270mmX120mmX65mm	330mmX120mmX65mm	600mmX125mmX65mm	134mmX87mmX65mm	200mmX87mmX65mm
Product name	24-channel Omron 485 comunication module	32-channel Omron 485 comunication module	64-channel RS485 Eth ernet Relay Module	4-Channel RS485 Communication + 232 Relay Module	8-Channel RS485 Communication +232 Relay Module
Product picture					
Model	QJ-16RG-T2/4-16A/24V	QJ-20RG-T2/4-16A/24V	QJ-24RG-T2/4-16A/24V	QJ-32RG-T2/4-16A/24V	QJ-32R1OZ-16IN
Size(mm)	327mmX87mmX65mm	239mmX120mmX60mm	270mmX120mmX65mm	330mmX120mmX65mm	367mmX122mmX59mm
Product name	16-Channel RS485 Communication +232 Relay Module	20-Channel RS485 Communication +232 Relay Module	24-Channel RS485 Communication +232 Relay Module	32-Channel RS485 Communication +232 Relay Module	16-channel RS485 inputs and 32-channel outputs Omron relay module
Transistor DC Output					
Product picture					
Model	QJ-8JGT-DC	QJ-16JGT-DC	QJ-24JGT-DC	QJ-32JGT-DC	QJ-32RGT-O1D-24V
Size(mm)	197mmX84mmX41mm	330mmX87mmX40mm	237mmX122mmX41mm	298mmX122mmX41mm	330mmX87mmX65mm
Product name	8-Channel RS485 Communication DC Amplifier Board	16-Channel RS485 Communication DC Amplifier Board	24-Channel RS485 Communication DC Amplifier Board	32-Channel RS485 Communication DC Amplifier Board	32-channel Omron 485 comunication module （Omron single open）

RS485 Communication Inputs and Outputs Series

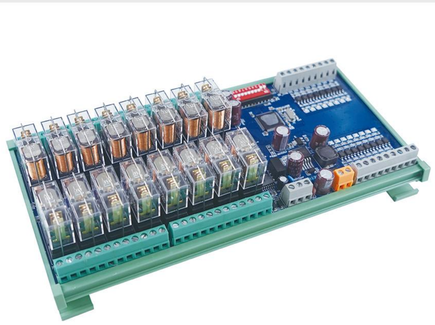

Product Parameter

Supply Voltage：DC24V(DC18~28V)Optional 12V, support power reverse connection protection

Power requirement：650mA/DC24V

Storage temperature：-40~85℃

Relative humidity： 5%~95%no condensation

Input Type: Compatible PNP or NPN

Isolation voltage： 2500VDC

Communication protocol：MODBUS RTU

Wide voltage input range: 12-24VDC (default)

▸ **RS485 Communication IO Relay Module**

Product Selection Table

RS485 Communication Inputs and Outputs Series					
Product picture					
Model	QJ-4R10Z-4IN	QJ-8R10Z-8IN	QJ-16R10Z-16IN	QJ-32R10Z-32IN	QJ-4R10Z-4IN/2
Size(mm)	133mmX85mmX60mm	197mmX85mmX60mm	237mmX122mmX59mm	416mmX122mmX60mm	416mmX122mmX60mm
Product name	4-channel input and output with RS485 commucniation	8-channel input and output with RS485 commucniation	16-channel input and output with RS485 commucniation	32-channel RS485 inputs and outputs Omron relay module	4-channelRS485+ 232 inputs and outputs Omron relay module
Product picture			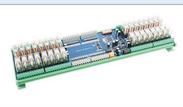	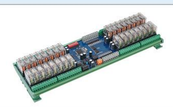	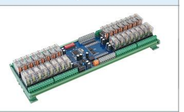
Model	QJ-8R10Z-8IN/2	QJ-16R10Z-16IN/2	QJ-32R10Z-32IN/2	QJ-32R1OZ-16IN (24V)	QJ-32R10Z-16IN (12V)
Size(mm)	197mmX85mmX60mm	237mmX122mmX60mm	416mmX122mmX60mm	367mmX122mmX59mm	367mmX122mmX59mm
Product name	8-Channel RS485 232 Omron IO Module	16-Channel RS485 232 Omron IO Module	32-channel RS485 inputs and outputs Omron relay module	16-channel RS485 inputs and 32-channel outputs Omron relay module	16-channel RS485 inputs and 32-channel outputs Omron relay module
RS485/232/Ethernet(LAN) Digital Inputs Module Series					
Product picture				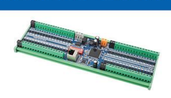	
Model	QJ-RS485-16DI	QJ-RS485-32DI	QJ-32DI-L/4/2	QJ-64DI-TL	
Size(mm)	112mmX85mmX40mm	158mmX85mmX40mm	196mmX85mmX40mm	261mmX85mmX40mm	
Product name	16-channel RS485 digital input module with lights	32-channel RS485 digital input module with lights	32-channel RS485 +232 digital input module with lights + LAN	64-channel RS485 digital input module with lights + LAN network	

Ethernet Communication Digital Outputs

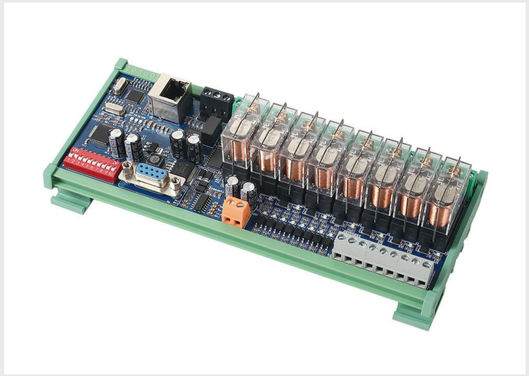

RS485 Communication Omron Inputs Outputs Expansion Network Module

Product Parameter

Supply Voltage：DC24V(DC18~28V)Optional 12V, support power reverse connection protection

Power requirement：300mA/DC24V

Operating temperature：-10℃~60℃

Storage temperature：-40~85℃

Relative humidity： 5%~95%no condensation

Input Type: Compatible PNP or NPN

Isolation voltage： 2500VDC

Communication interface：LANnetwork port、RS485、RS232

Communication protocol：MODBUS RTU/MODBUS TCP

Product Selection Table

RS485 Commucniation + 232 + LAN Module					
Product picture					
Model	QJ-8O8DI-T2/4/L-12V/24V	QJ-8O8DI-TL/4-12V/24V	QJ-8O8DI-T2/4-12V/24V	QJ-8H8DI-T2/4/L	QJ-8O2Z8DI-T2/4/L
Size(mm)	197mmX85mmX60mm	197mmX85mmX60mm	197mmX85mmX60mm	197mmX85mmX60mm	201mmX121mmX60mm
Product name	RS485 232 Omron IO Module+LAN network	8-Channel Hongfa inputs and outputs expansion network module	8-Channel RS485 232 Omron IO Module	8-Channel Omron inputs and outputs expansion network module	8-Channel 2NO 2NC RS485 232 Ethernet I0 Module

Communication interface



Independent RJ45 network port

The new network port function comes with a standard RJ45 ne twork port that works independently. Users only need to simply set the IP port number of the machine to achieve extended inp ut and output outlets for remote devices (such as computers, P LCs that support network ports, and touch screens w ith network ports)



The RS232 communication circuit

is equipped with a standard RS232 communication circuit to achieve full-duplex communication (485 is half-duplex) and p rovide communication response speed.Comparison of comm unication.
Speeds of different interfaces: network port > RS232 > RS485

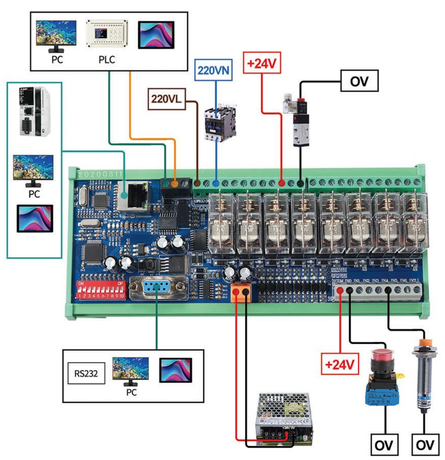

RS485 Digital Acquisition Module



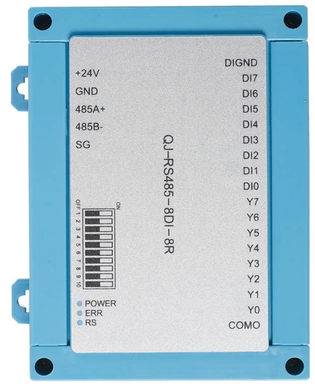

12-Channel Analog Acquisition Module

8-Channel RS485 Digital Inputs and Relay Outputs Module

Product Parameter

Supply Voltage：DC10~30V,support power reverse connection protection

Storage temperature：-40~85℃

Operating temperature：-10℃~60℃

Relative humidity： 5%~95%no condensation

Isolation voltage： ±1500V

Communication interface：RS485

Reverse connection protection：All products are supported

Communication Protocol：Modbus-RTU

Trigger voltage：DC 3.3V / 5V / 12V / 24V optional

Input Type：NPN

Input isolation：Support (isolated voltage ± 1500V)

Input indicator：Yes

Shield terminal: support

Maximum number of nodes: 32 modules shared bu

Baud rate：1200/2400/4800/9600/19200/38400/57600/115200

RS485 Ethernet Digital Inputs Module



▸ 48-channel RS485 Ethernet Digital Inputs Module

Product Benefits

1.Signal type: Switch contact signal or level signal (dry contact)

2.Interface format：RS485

3.IP address：(The IP address can be configured.)

4.Operating voltage: 10~28VDC (above 0.5A)

5.Communication protocol：ModBus-TCP、ModBus-RTU

6.Signal Type ：IP Allocation Method

7.Operating temperature: -20~+70°C

8.Operating humidity: 5% to 95% RH (non-condensing)

9.Storage temperature: -40~+85°C

10.Data format: 8N1 (default), 801, 8E1

11.Collection speed: 10Khz (50% duty cycle)

12.Installation method: Standard 35mm rail installation

13.Input detection: Compatible with 10~28VDC

14.Baud rate: 1200-115200bps

Product Selection Table

RS485 Ethernet Digital Inputs Module					
Product picture					
Model	QJ-B4DI-L/4	QJ-B8DI-L/4	QJ-B12DI-L/4	QJ-B16DI-L/4	QJ-B20DI-L/4
Size(mm)	53mmX91mmX59mm	53mmX91mmX59mm	110mmX91mmX59mm	110mmX91mmX59mm	147mmX91mmX59mm
Product name	4-channel digital input 485 LAN box module	8-channel digital input 485 LAN box module	12-channel digital input 485 LAN box module	16-channel digital input 485 LAN box module	20-channel digital input 485 LAN box module
Product picture					
Model	QJ-B24DI-L/4	QJ-B32DI-L/4	QJ-B40DI-L/4	QJ-B48DI-L/4	QJ-B64DI-L/4
Size(mm)	147mmX91mmX59mm	147mmX91mmX59mm	220mmX91mmX59mm	220mmX91mmX59mm	297mmX91mmX59mm
Product name	24-channel digital input 485 LAN box module	32-channel digital input 485 LAN box module	40-channel digital input 485 LAN box module	48-channel digital input 485 LAN box module	64-channel digital input 485 LAN box module

RS485 Analog Inputs Module



▸ 16-channel RS485 Analog Inputs Module

（Current and voltage options are available）

Product Benefits

1.Operating voltage: DC8V~32V (with reverse polarity protection)

2.Operating current: <200mA

3.Signal measurement range: Current type: 0~20mA (compatible with 4~20mA); Voltage type: 0~10V (compatible with 0~5V, 1~5V)

4.Resolution: 16-bit

5.Accuracy level: better than +0.1%

6.Input impedance: Voltage measurement 10MΩ; Current measurement 200Ω

7.Communication protocol: MODBUS RTU protocol

8.Baud rates: 1200~115200

9.Protection Measures: Power input polarity protection, communication error indication

Temperature Acquisition Module



▸ 4-Channel PT100 Temperature Acquisition Module

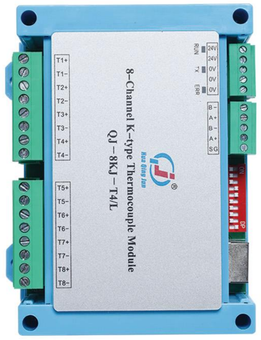

▸ 8-Channel PT1000 Temperature Acquisition Module

Product Benefits

1.Supply Current：≥100mA (12V); >50mA (24V)

2.Wiring Type：Supports 2-wire, 3-wire, and 4-wire configurations

3.Communication Standard：Standard MODBUS TCP and MODBUS RTU communication

4.Excitation Current: 700μA/channel

5.Accuracy：18-bit high-precision measurement / 24-bit real-time acquisition

6.Operating Voltage ：DC 8~30VDC (recommended 24VDC > 280mA with polarity protection)

7.Operating Temperature: -40°C to 85°C

8.Mounting Method: Rail mounting or screw mounting available

9.Baud Rate: 2400~115200 BPS

10.Operating Temperature: -20°C to 70°C

11.Measurement Accuracy：+0.2°C

12.Operating Humidity: 0~95%RH

13.Hardware Address：0~31°C (configurable)

14.Conversion Speed: 0.5 seconds/cycle

15.Communication Hardware Isolation: 1500VDC

Product Selection Table

Temperature Acquisition Module							
Product picture							
Model	QJ-4PT100-485	QJ-8PT100-T4/L	QJ-12PT100-T/4/L	QJ-16PT100-T/4/L	QJ-8PT1000-485	QJ-4KJ-485	QJ-8KJ-T4/L
Size(mm)	130mmX72mmX43mm	125mmX89mmX45mm	110mmX91mmX59mm	147mmX91mmX59mm	125mmX89mmX45mm	130mmX72mmX43mm	125mmX89mmX45mm
Product name	4-Channel PT100 Temperature Acquisition Module	8-Channel PT100 Temperature Acquisition Module+LAN	12-Channel PT100 Temperature Acquisition Module+LAN	16-Channel PT100 Temperature Acquisition Module+LAN	8-Channel PT1000 Temperature Acquisition Module+LAN	4-channel 485 data acquisition for Type K thermocouples	8-Channel 485 Data Acquisition for Type K Thermocouples+LAN

Product Selection Table

RS485 Communication Series					
Product picture					
Model	QJ-RS485-4AII	QJ-RS485-8AII	QJ-RS485-12AII	QJ-RS485-4AIV	QJ-RS485-8AIV
Size(mm)	130mmX72mmX43mm	30mmX72mmX43mm	130mmX72mmX43mm	130mmX72mmX43mm	130mmX72mmX43mm
Product name	4-channel analog acquisition module (current type)	8-channel analog acquisition module (current type)	12-channel analog acquisition module (current type)	4-channel analog acquisition module (voltage type)	8-channel analog acquisition module (voltage type)
Product picture					
Model	QJ-RS485-12AIV	QJ-RS485-H2A0I	QJ-RS485-H2A0V	QJ-16AII-485	QJ-16AIV-485
Size(mm)	130mmX72mmX43mm	73mmX87mmX65mm	73mmX99mmX33mm	110mmX91mmX61mm	110mmX91mmX61mm
Product picture	12-channel analog acquisition module (voltage type)	2-channel RS485 analog output module (current type)	22-channel RS485 analog output module (voltage type)	16-channel RS485 Analog input module (current type)	16-channel RS485 Analog input module (voltage type)
Product picture					
Model	QJ-RS485-8A0I	QJ-RS485-8A0V	QJ-16AII-2L	QJ-16AIV-2L	QJ-RS485-H16R
Size(mm)	125mmX90mmX40mm	125mmX90mmX40mm	110mmX91mmX61mm	110mmX91mmX61mm	125mmX90mmX40mm
Product picture	8-channel RS485 analog outpt module (current type)	8-channel RS485 analog outpt module (voltage type)	16-channel Dual-Ethernet Analog Inputs Module (current type)	16-channel Dual-Ethernet Analog Inputs Module (voltage type)	16-channel RS485 relay output module
Product picture					
Model	QJ-RS485-4DI	QJ-RS485-8DI	QJ-RS485-12DI	QJ-RS485-H8DI-8R	QJ-RS485-H16DI
Size(mm)	130mmX72mmX43mm	130mmX72mmX43mm	130mmX72mmX43mm	125mmX90mmX40mm	125mmX90mmX40mm
Product name	4-channel digital input acquisition module	8-channel digital input acquisition module	12-channel digital input acquisition module	8-channel RS485 digital input and output module	16-channel RS485 digital input module

RS485 LAN Current Transformer Detection Module



Product Benefits

1.Sampling Structure: Δ-ADC Oversampling & Noise Shaping
2.Sampling Method: Non-contact Sampling
3.Sampling Depth: Configurable (10x to 100x)
4.Baud Rate: 1200 to 115200 BPS
5.Accuracy: 0.01A
6.Error: ±0.5%
7.AC Frequency: 7~255Hz Detection
8.Operating Temperature: -37~75°C
9.Operating Humidity: ≤90%RH
10.Range: Default 25A Model (AC 0.05A~25.00A)2: Optional 50A Model (AC 0.06A~50.00A)3: Optional 100A Model (AC 0.08A~100.00A) (Other ranges available upon request for custom voltage measurement)
11.Aperture: 9mm
12.Special Features: Supports standard AC current measurement; supports chopper-regulated AC current measurement

▸ **6-Channel 485 Communication Modular Current Detection Module+LAN**

Product Selection Table

Current Detection Module						
Product picture						
Model	QJ-1HG/A-T4	QJ-2HG/A-T4	QJ-3HG/A-T4	QJ-6HG/A-T4	QJ-9HG/A-T4	QJ-12HG/A-T4
Size(mm)	72mmX106mmX50mm	92mmX106mmX50mm	120mmX106mmX50mm	215mmX106mmX50mm	304mmX106mmX50mm	366mmX106mmX50mm
Product name	1-Channel 485 Communication Modular Current Detection Module	2-Channel 485 Communication Modular Current Detection Module	3-Channel 485 Communication Modular Current Detection Module	6-Channel 485 Communication Modular Current Detection Module	9-Channel 485 Communication Modular Current Detection Module	12-Channel 485 Communication Modular Current Detection Module
Product picture						
Model	QJ-16HG/A-T4	QJ-6HG/A-T4/L	QJ-9HG/A-T4/L	QJ-12HG/A-T4/L	QJ-16HG/A-T4/L	
Size(mm)	455mmX106mmX50mm	215mmX106mmX50mm	304mmX106mmX50mm	366mmX106mmX50mm	455mmX106mmX50mm	
Product name	16-Channel 485 Communication Modular Current Detection Module	6-Channel 485 Communication Modular Current Detection Module+LAN	9-Channel 485 Communication Modular Current Detection Module+LAN	12-Channel 485 Communication Modular Current Detection Module+LAN	16-Channel 485 Communication Modular Current Detection Module+LAN	

RS485 LAN Current Voltage Transformer Detection Module



Product Benefits

1.Sampling Structure: Δ-ADC Oversampling & Noise Shaping
2.Sampling Method: Non-contact Sampling
3.Sampling Depth: Configurable (10x to 100x)
4.Baud Rate: 1200 to 115200 BPS
5.Accuracy: 0.01A
6.Error: ±0.5%
7.AC Frequency: 7~255Hz Detection
8.Operating Temperature: -37~75°C
9.Operating Humidity: ≤90%RH
10.Range: Default 25A Model (AC 0.05A~25.00A)2: Optional 50A Model (AC 0.06A~50.00A)3: Optional 100A Model (AC 0.08A~100.00A) (Other ranges available upon request for custom voltage measurement)
11.Aperture: 9mm
12.Special Features: Supports standard AC current measurement; supports chopper-regulated AC current measurement
13.Supply Voltage: DC 9V–28V
14.Isolation Voltage:3200V/MIN

▸ **6-Channel 485 Communication Modular Current/Voltage Detection Module+LAN**

Product Selection Table

Current and Voltage Detection Module						
Product picture						
Model	QJ-1HG/W-T4	QJ-2HG/W-T4	QJ-3HG/W-T4	QJ-6HG/W-T4	QJ-9HG/W-T4	QJ-12HG/W-T4
Size(mm)	72mmX106mmX50mm	92mmX106mmX50mm	120mmX106mmX50mm	215mmX106mmX50mm	304mmX106mmX50mm	366mmX106mmX50mm
Product name	1-Channel 485 Communication Modular Current and Voltage Detection Module	2-Channel 485 Communication Modular Current and Voltage Detection Module	3-Channel 485 Communication Modular Current and Voltage Detection Module	6-Channel 485 Communication Modular Current and Voltage Detection Module	9-Channel 485 Communication Modular Current and Voltage Detection Module	12-Channel 485 Communication Modular Current and Voltage Detection Module
Product picture						
Model	QJ-16HG/W-T4	QJ-6HG/W-T4/L	QJ-9HG/W-T4/L	QJ-12HG/W-T4/L	QJ-16HG/W-T4/L	
Size(mm)	455mmX106mmX50mm	215mmX106mmX50mm	304mmX106mmX50mm	366mmX106mmX50mm	455mmX106mmX50mm	
Product name	16-Channel 485 Communication Modular Current and Voltage Detection Module	6-Channel 485 Communication Modular Current and Voltage Detection Module+LAN	9-Channel 485 Communication Modular Current and Voltage Detection Module+LAN	12-Channel 485 Communication Modular Current and Voltage Detection Module+LAN	16-Channel 485 Communication Modular Current and Voltage Detection Module+LAN	

3-Channel CT Current Acquisition & Relay Output



3-Channel CT Current Acquisition & Relay Output

Product Parameter

1. Detection Channels: 3 channels
2. Current Range: 0~50A / 0~100A / 0~500A; other ranges available upon inquiry
3. Frequency Range: 20~100Hz
Measurement Refresh Time: <200ms
4. CT Isolation Withstand Voltage: 2000V, 50Hz, 1min
Measurement Accuracy: Class 0.2
5. Display: 4-digit LED digital tube
6. Relay Rating: 250VAC/10A, 30VDC/10A
7. Operation Mode: 3 tactile push buttons
8. Operating Ambient Temperature: -20°C ~ 70°C
9. Power Supply Voltage: DC 19~28V
10. Communication Interface: RS485
11. Recommended Supply Current: ≥500mA

Product Performance Advantages

1. Supports current upper and lower limit alarms; upper/lower limit protection can be enabled or disabled independently.
2. Supports alarm hysteresis mode. (Example: An alarm triggers when fan current exceeds 50A, and the alarm clears when current drops below 30A.
In this case, users set upper limit = 50A, hysteresis value = 50-30=20A, lower limit = 0A.)
3. 3-channel relay output, 250VAC/10A, 30VDC/10A, equipped with Hongfa relays.
4. Displays measured current with cyclic display for three channels, or flashes to indicate the channel number of abnormality upon alarm.
5. Supports debounce filtering time and freely configurable sampling delay time.
6. Optional RS485 MODBUS. Compatible with PLC, PC software, 4G DTU, HMI for data exchange.
7. Configurable communication parameters: station address, baud rate, data format.
8. 3 channels with independent parameter configuration, no cross interference.
9. Each channel supports configurable detection delay time.
10. Standard 35mm DIN rail mount.
11. Digital tube display, intuitive and clear.

AC Current Sensing Transformer



1-Channel AC Current Sensing Transformer

Product Parameter

1.Sampling Structure: Δ-ADC Oversampling & Noise Shaping
2.Sampling Method: Non-contact Sampling
3.Sampling Depth: Configurable (10x to 100x)
4.Baud Rate: 1200 to 115200 BPS
5.Accuracy: 0.01A
6.Error: ±0.5%
7.AC Frequency: 7~255Hz Detection
8.Operating Temperature: -37~75°C
9.Operating Humidity: ≤90%RH
11.Aperture: 9mm
12.Special Features: Supports standard AC current measurement; supports chopper-regulated AC current measurement

PLC Expansion Board DC Module

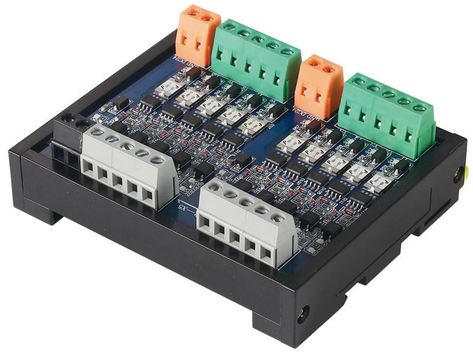

PLC Expansion Board DC Module

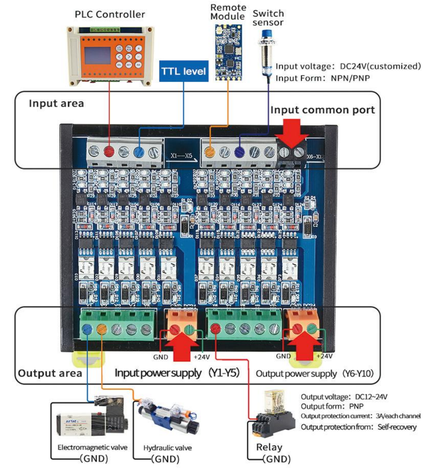

Wiring Diagram of PLC Self-recovery DC Board

Product Parameter

Control part：Imported IR high power MOSFET

Input voltage: 24V (The default is 24V, the control range is 3V-24V)

Operating temperature: -20-70 °C

Input signal: Compatible with NPN (input 0V signal is valid) and PNP

Installation method: Standard rail (Can be mounted on NS35/7.5 or NS32 guide

Load current (each channel)：Resistive load≤2.5A (Instant 10A)
Inductive load≤2A (Instant 10A)

Input minimum drive current: ≥5mA

Input response time: ≥0.3ms

Operating temperature: -20-70 °C

Mechanical life：100 million times

Instant inrush current: 10A

Short circuit protection : 3A

Connection method: 5.08 Terminal（plug-in terminal block）

Self-recovery protection (each channel): ≥3A

Continuous working current: within 2A

Max. Switching frequency: ＜3K

Storage temperature:-40-150 °C

PLC DC Amplifier Board /AC Amplifier Board

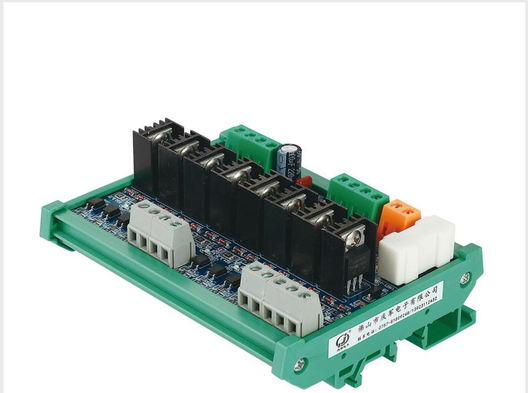

PLC DC Amplifier board

Product Parameter

Control part：Imported IR high power MOSFET

Nput voltage: 24V (The default is 24V, the control range is 3V-24V. If you need other, please specify)

Load current (each channel)：Resistive load≤3A (Instant 8A) Inductive load≤2A (Instant 8A)

Input minimum drive current:≥15mA

Input response time: ≥02ms

Max. Switching frequency: ＜3K

Storage temperature:-40-150 ℃

Operating temperature: -20-70 ℃

Loop insulation: Optical isolation

Instant inrush current: 10A



PLC AC Amplifier Board

Product Parameter

Loop insulation: Optical isolation

Input signal voltage: 24V (The default is 24V, the control range is 3V-24V. If you need other, please specify)

Maximum load current (Each channel): Resistive load≤2A (Instant10A, if you need to be bigger, can custom-made)

Input minimum drive current: ≥15mA

Input response time:≤0.2ms

Operating temperature: -20-70 ℃

Storage temperature:-40-150 ℃

Working frequency:50HZ-60HZ

Service life: > 10 million times (Drive tube 1 million hours)

Short circuit protection (Fuse): 20A

Product Selection Table

PLC DC Amplifier board					
Product picture					
Model	QJ-2JG-DC	QJ-4JG-DC	QJ-6JG-DC	QJ-8JG-DC	QJ-10JG-DC
Size(mm)	87mmX86mmX50mm	87mmX86mmX50mm	88mmX86mmX50mm	112mmX86mmX50mm	141mmX86mmX50mm
Product name	2-channel DC amplifier board	4-channel DC amplifier board	6-channel DC amplifier board	8-channel DC amplifier board	10-channel DC amplifier board
Product pictur					
Model	QJ-12JG-DC	QJ-16JG-DC	QJ-20JG-DC	QJ-24JG-DC	
Size(mm)	170mmX86mmX50mm	217mmX86mmX50mm	280mmX86mmX50mm	330mmX86mmX50mm	
Product name	12-channel DC amplifier board	16-channel DC amplifier board	20-channel DC amplifier board	24-channel DC amplifier board	

PLC AC Amplifier Board					
Product pictur					
Model	QJ-2KG-AC	QJ-4KG-AC	QJ-6KG-AC	QJ-8KG-AC	QJ-10KG-AC
Size(mm)	87mmX34mmX40mm	87mmX60mmX40mm	88mmX87mmX40mm	112mmX87mmX40mm	141mmX87mmX40mm
Product name	2-channel AC amplifier board	4-channel AC amplifier board	6-channel AC amplifier board	8-channel AC amplifier board	10-channel AC amplifier board
Product pictur					
Model	QJ-12KG-AC	QJ-16KG-AC	QJ-20KG-AC	QJ-24KG-AC	
Size(mm)	172mmX87mmX40mm	218mmX87mmX40mm	280mmX87mmX40mm	330mmX87mmX450mm	
Product name	12-channel AC amplifier board	16-channel AC amplifier board	20-channel AC amplifier board	24-channel AC amplifier board	

Product Selection Table

PLC DC Amplifier Board/High Power					
Product picture					
Model	QJ-4JG-DCDO	QJ-8JG-DCDO	QJ-10JG-DCDO		
Size(mm)	114mmX87mmX65mm	170mmX87mmX65mm	323mmX87mmX65mm		
Product name	4-channel DC high power board	8-channel DC high power board	10-channel DC high power board		

PLC AC Amplifier Board/High Power					
Product picture					
Model	QJ-2KG-ACD	QJ-4KG-ACD	QJ-6KG-ACD	QJ-4KG-AC-4+2D	QJ-8KG-ACD
Size(mm)	70mmX87mmX54mm	114mmX87mmX65mm	200mmX87mmX65mm	134mmX87mmX65mm	264mmX87mmX65mm
Product name	2-channel High Power	4-channel High Power	6-channel High Power	6-channel AC mixed board	8-channel High Power

PLC Expansion Board DC Module					
Product picture					
Model	QJ-2TS-DC	QJ-4TS-DC	QJ-6TS-DC	QJ-8TS-DC	QJ-10TS-DC
Size(mm)	80mmX32mmX20mm	80mmX55mmX20mm	80mmX60mmX20mm	84mmX80mmX20mm	95mmX80mmX20mm
Product name	2-channel DC self-recovery protection module	4-channel DC self-recovery protection module	6-channel DC self-recovery protection module	8-channel DC self-recovery protection module	10-channel DC self-recovery protection module
Product picture					
Model	QJ-12TS-DC	QJ-16TS-DC	QJ-18TS-DC	QJ-20TS-DC	QJ-24TS-DC
Size(mm)	110mmX80mmX20mm	147mmX80mmX20mm	175mmX80mmX20mm	190mmX87mmX20mm	215mmX87mmX20mm
Product picture	12-channel DC self-recovery protection module	16-channel DC self-recovery protection module	20-channel DC self-recovery protection module	20-channel DC self-recovery protection module	24-channel DC self-recovery protection module

Omron Relay Module

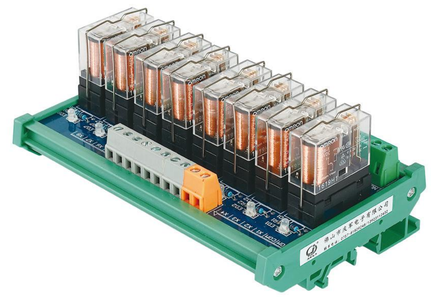

▸ 1NO 1NC Omron Relay Module

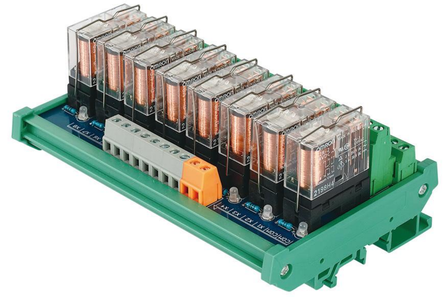

▸ 2NO 2NC Omron Relay Module

Omron Relay Module Wiring Diagram

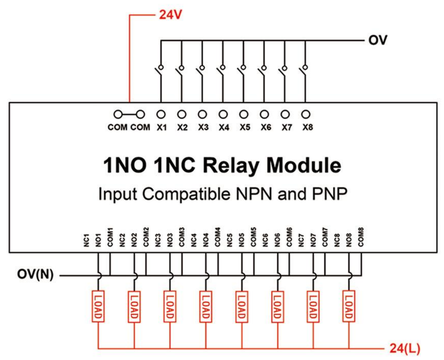

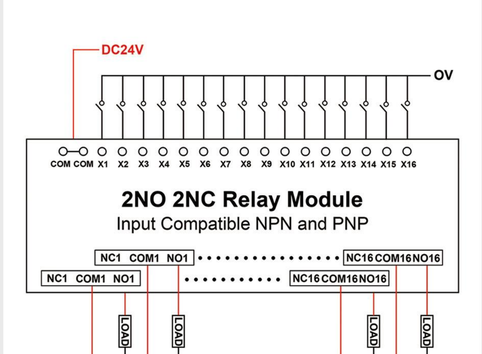

Input terminal: When "COM" to 0V "X1-X24" connected to a high level (24V) the indicator light is red;
When "COM" to 24V "X1-X24" connected to a low level (0V) the indicator light is blue;
Output terminal: NC is the relay normally closed contact; NO is the relay normally open contact;
Common terminal: COM is the relay common terminal.

Input terminal: When "COM" to 0V "X1-X24" connected to a high level (24V) the indicator light is red;
When "COM" to 24V "X1-X24" connected to a low level (0V) the indicator light is blue;

Product Selection Table

Omron Relay Module DC12V/24V (1NO 1NC)

Product picture					
Model	QJ-2RG-O1Z-24V	QJ-4RG-O1Z-24V	QJ-6RG-O1Z-24V	QJ-8RG-O1Z-24V	QJ-10RG-O1Z-24V
Size(mm)	40mmX87mmX65mm	70mmX87mmX65mm	106mmX87mmX65mm	134mmX87mmX65mm	170mmX87mmX65mm
Product name	2-channel relay module single group	4-channel relay module single group	6-channel relay module single group	8-channel relay module single group	10-channel relay module single group
Product picture					
Model	QJ-12RG-O1Z-24V	QJ-16RG-O1Z-24V	QJ-20RG-O1Z-24V	QJ-24RG-O1Z-24V	QJ-26R2-O1Z-24V
Size(mm)	200mmX87mmX65mm	264mmX87mmX65mm	330mmX87mmX65mm	393mmX87mmX65mm	235mmX120mmX65mm
Product name	12-channel relay module single group	16-channel relay module single group	20-channel relay module single group	24-channel relay module single group	26-channel relay module single group
Product picture					
Model	QJ-32R2-O1Z-24V	QJ-36R2-O1Z-24V			
Size(mm)	300mmX120mmX65mm	330mmX120mmX65mm			
Product name	32-channel relay module single group	36-channel relay module single group			

Omron Relay Module DC12V/24V (2NO 2NC)

Product picture					
Model	QJ-2RG-O2Z-24V	QJ-4RG-O2Z-24V	QJ-6RG-O2Z-24V	QJ-8RG-O2Z-24V	QJ-10RG-O2Z-24V
Size(mm)	40mmX87mmX65mm	70mmX87mmX65mm	106mmX87mmX65mm	134mmX87mmX65mm	170mmX87mmX65mm
Product name	2-channel relay module dual groups	4-channel relay module dual groups	6-channel relay module dual groups	8-channel relay module dual groups	10-channel relay module dual groups
Product picture					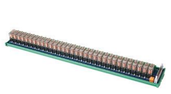
Model	QJ-12RG-O2Z-24V	QJ-16RG-O2Z-24V	QJ-20RG-O2Z-24V	QJ-24RG-O2Z-24V	QJ-32RG-O2Z-24V
Size(mm)	200mmX87mmX65mm	264mmX87mmX65mm	330mmX87mmX65mm	393mmX87mmX65mm	543mmX87mmX65mm
Product name	12-channel relay module dual groups	16-channel relay module dual groups	20-channel relay module dual groups	24-channel relay module dual groups	32-channel relay module dual groups

Product Selection Table

IDEC Relay Module DC12V/24V(1NO 1NC)

Product picture					
Model	QJ-2RG-Q1ZCL-24V	QJ-4RG-Q1ZCL-24V	QJ-6RG-Q1ZCL-24V	QJ-8RG-Q1ZCL-24V	QJ-10RG-Q1ZCL-24V
Size(mm)	40mmX87mmX65mm	70mmX87mmX65mm	106mmX87mmX65mm	134mmX87mmX65mm	170mmX87mmX65mm
Product name	2-channel relay module single group	4-channel relay module single group	6-channel relay module single group	8-channel relay module single group	10-channel relay module single group
Product picture					
Model	QJ-12RG-Q1ZCL-24V	QJ-16RG-Q1ZCL-24V	QJ-20RG-Q1ZCL-24V	QJ-24RG-Q1ZCL-24V	
Size(mm)	200mmX87mmX65mm	264mmX87mmX65mm	330mmX87mmX65mm	393mmX87mmX65mm	
Product name	12-channel relay module single group	16-channel relay module single group	20-channel relay module single group	24-channel relay module single group	

IDEC Wide-foot Relay Module DC12V/24V/AC220V(2NO 2NC)

Product picture					
Model	QJ-2RG-Q2ZCL-24V	QJ-4RG-Q2ZCL-24V	QJ-6RG-Q2ZCL-24V	QJ-8RG-Q2ZCL-24V	QJ-10RG-Q2ZCL-24V
Size(mm)	40mmX87mmX65mm	70mmX87mmX65mm	106mmX87mmX65mm	134mmX87mmX65mm	170mmX87mmX65mm
Product name	2-channel relay module dual groups	4-channel relay module dual groups	6-channel relay module dual groups	8-channel relay module dual groups	10-channel relay module dual groups
Product picture					
Model	QJ-12RG-Q2ZCL-24V	QJ-16RG-Q2ZCL-24V	QJ-20RG-Q2ZCL-24V	QJ-24RG-Q2ZCL-24V	
Size(mm)	200mmX87mmX65m	264mmX87mmX65m	330mmX87mmX65m	393mmX87mmX65m	
Product name	12-channel relay module dual groups	16-channel relay module dual groups	20-channel relay module dual groups	24-channel relay module dual groups	

Product Selection Table

IDEC Relay Module DC 12V/24V(1NO 1NC)

Product picture					
Model	QJ-2RG-Q1Z-24V	QJ-4RG-Q1Z-24V	QJ-6RG-Q1Z-24V	QJ-8RG-Q1Z-24V	QJ-10RG-Q1Z-24V
Size(mm)	40mmX87mmX65mm	70mmX87mmX65mm	106mmX87mmX65mm	134mmX87mmX65mm	170mmX87mmX65mm
Product name	2-channel relay module single group	4-channel relay module single group	6-channel relay module single group	8-channel relay module single group	10-channel relay module single group
Product picture					
Model	QJ-12RG-Q1Z-24V	QJ-16RG-Q1Z-24V	QJ-20RG-Q1Z-24V	QJ-24RG-Q1Z-24V	QJ-26RG-Q1Z-24V
Size(mm)	200mmX87mmX65mm	264mmX87mmX65mm	330mmX87mmX65mm	393mmX87mmX65mm	235mmX120mmX65mm
Product name	12-channel relay module single group	16 -channel relay module single group	20 -channel relay module single group	24-channel relay module single group	26-channel relay module single group
Product picture					
Model	QJ-32RG-Q1Z-24V	QJ-36RG-Q1Z-24V			
Size(mm)	300mmX120mmX65mm	330mmX120mmX65mm			
Product name	32-channel relay module single group	36-channel relay module single group			

IDEC Relay Module DC 12V/24V(2NO 2NC)

Product picture					
Model	QJ-2RG-Q2Z-24V	QJ-4RG-Q2Z-24V	QJ-6RG-Q2Z-24V	QJ-8RG-Q2Z-24V	QJ-10RG-Q2Z-24V
Size(mm)	40mmX87mmX65mm	70mmX87mmX65mm	106mmX87mmX65mm	134mmX87mmX65mm	170mmX87mmX65mm
Product name	2-channel relay module dual groups	4-channel relay module dual groups	6-channel relay module dual groups	8-channel relay module dual groups	10-channel relay module dual groups
Product name					
Model	QJ-12RG-Q2Z-24V	QJ-16RG-Q2Z-24V	QJ-20RG-Q2Z-24V	QJ-24RG-Q2Z-24V	QJ-32RG-Q2Z-24V
Size(mm)	200mmX87mmX65mm	264mmX87mmX65mm	330mmX87mmX65mm	393mmX87mmX65mm	543mmX87mmX65mm
Product name	12-channel relay module dual groups	16-channel relay module dual groups	20-channel relay module dual groups	24-channel relay module dual groups	32-channel relay module dual groups

Product Selection Table

Panasonic Relay Module 1NO 1NC

Product picture					
Model	QJ-2RG-S1Z-24V	QJ-4RG-S1Z-24V	QJ-6RG-S1Z-24V	QJ-8RG-S1Z-24V	QJ-10RG-S1Z-24V
Size(mm)	40mmX87mmX65mm	70mmX87mmX65mm	106mmX87mmX65mm	134mmX87mmX65mm	134mmX87mmX65mm
Product name	2-Channel 1NO 1NC Panasonic Relay Module	4-Channel 1NO 1NC Panasonic Relay Module	6-Channel 1NO 1NC Panasonic Relay Module	8-Channel 1NO 1NC Panasonic Relay Module	10-Channel 1NO 1NC Panasonic Relay Module
Product picture					
Model	QJ-12RG-S1Z-24V	QJ-16RG-S1Z-24V	QJ-20RG-S1Z-24V	QJ-24RG-S1Z-24V	QJ-26R2-S1Z-24V
Size(mm)	200mmX87mmX65mm	264mmX87mmX65mm	330mmX87mmX65mm	393mmX87mmX65mm	235mmX120mmX65mm
Product name	12-Channel 1NO 1NC Panasonic Relay Module	16-Channel 1NO 1NC Panasonic Relay Module	20-Channel 1NO 1NC Panasonic Relay Module	24-Channel 1NO 1NC Panasonic Relay Module	26-Channel 1NO 1NC Panasonic Relay Module
Product picture					
Model	QJ-32R2-S1Z-24V	QJ-36R2-S1Z-24V			
Size(mm)	300mmX120mmX65mm	330mmX120mmX65mm			
Product name	32-Channel 1NO 1NC Panasonic Relay Module	36-Channel 1NO 1NC Panasonic Relay Module			

Panasonic Relay Module 2NO 2NC

Product picture					
Model	QJ-2RG-S2Z-24V	QJ-4RG-S2Z-24V	QJ-6RG-S2Z-24V	QJ-8RG-S2Z-24V	QJ-10RG-S2Z-24V
Size(mm)	40mmX87mmX65mm	70mmX87mmX65mm	106mmX87mmX65mm	134mmX87mmX65mm	170mmX87mmX65mm
Product name	2-Channel 2NO 2NC Panasonic Relay Module	4-Channel 2NO 2NC Panasonic Relay Module	6-Channel 2NO 2NC Panasonic Relay Module	8-Channel 2NO 2NC Panasonic Relay Module	10-Channel 2NO 2NC Panasonic Relay Module
Product picture					
Model	QJ-12RG-S2Z-24V	QJ-16RG-S2Z-24V	QJ-20RG-S2Z-24V	QJ-24RG-S2Z-24V	QJ-32RG-S2Z-24V
Size(mm)	200mmX87mmX65mm	264mmX87mmX65mm	330mmX87mmX65mm	393mmX87mmX65mm	543mmX87mmX65mm
Product name	12-Channel 2NO 2NC Panasonic Relay Module	16-Channel 2NO 2NC Panasonic Relay Module	20-Channel 2NO 2NC Panasonic Relay Module	24-Channel 2NO 2NC Panasonic Relay Module	32-Channel 2NO 2NC Panasonic Relay Module

Product Selection Table

Tyco Relay Module DC24V(1NO 1NC)

Product picture					
Model	QJ-2RG-T1Z-24V	QJ-4RG-T1Z-24V	QJ-6RG-T1Z-24V	QJ-8RG-T1Z-24V	QJ-10RG-T1Z-24V
Size(mm)	40mmX87mmX65mm	70mmX87mmX65mm	106mmX87mmX65mm	134mmX87mmX65mm	170mmX87mmX65mm
Product name	2-channel relay module single group	4-channel relay module single group	6-channel relay module single group	8-channel relay module single group	10-channel relay module single group
Product picture					
Model	QJ-12RG-T1Z-24V	QJ-16RG-T1Z-24V	QJ-20RG-T1Z-24V	QJ-24RG-T1Z-24V	QJ-26R2-T1Z-24V
Size(mm)	200mmX87mmX65mm	264mmX87mmX65mm	330mmX87mmX65mm	393mmX60mmX65mm	235mmX120mmX65mm
Product name	12-channel relay module single group	16-channel relay module single group	20-channel relay module single group	24-channel relay module single group	26-channel relay module single group
Product picture					
Model	QJ-32R2-T1Z-24V	QJ-36R2-T1Z-24V			
Size(mm)	300mmX120mmX65mm	330mmX120mmX65mm			
Product name	32-channel relay module single group	36-channel relay module single group			

Tyco Relay Module DC24V(2NO 2NC)

Product picture					
Model	QJ-2RG-T2Z-24V	QJ-4RG-T2Z-24V	QJ-6RG-T2Z-24V	QJ-8RG-T2Z-24V	QJ-10RG-T2Z-24V
Size(mm)	40mmX87mmX65mm	70mmX87mmX65mm	107mmX87mmX65mm	134mmX87mmX65mm	170mmX87mmX65mm
Product name	2-channel relay module dual groups	4-channel relay module dual groups	6-channel relay module dual groups	8-channel relay module dual groups	10-channel relay module dual groups
Product picture					
Model	QJ-12RG-T2Z-24V	QJ-16RG-T2Z-24V	QJ-20RG-T2Z-24V	QJ-24RG-T2Z-24V	QJ-32RG-T2Z-24V
Size(mm)	200mmX87mmX65mm	264mmX87mmX65mm	330mmX87mmX65mm	393mmX87mmX65mm	543mmX87mmX65mm
Product name	12-channel relay module dual groups	16-channel relay mod20 dual groups	20-channel relay module dual groups	24-channel relay module dual groups	32-channel relay module dual groups

Product Selection Table

Hongfa Relay Module DC12V/24V(1NO 1NC)

Product picture					
Model	QJ-2RG-H1Z-24V	QJ-4RG-H1Z-24V	QJ-6RG-H1Z-24V	QJ-8RG-H1Z-24V	QJ-10RG-H1Z-24V
Size(mm)	40mmX87mmX65mm	70mmX87mmX65mm	106mmX87mmX65mm	134mmX87mmX65mm	170mmX87mmX65mm
Product name	2-channel relay module single group	4-channel relay module single group	6-channel relay module single group	8-channel relay module single group	10-channel relay module single group
Product picture					
Model	QJ-12RG-H1Z-24V	QJ-16RG-H1Z-24V	QJ-20RG-H1Z-24V	QJ-24RG-H1Z-24V	QJ-26R2-H1Z-24V
Size(mm)	200mmX87mmX65mm	264mmX87mmX65mm	330mmX87mmX65mm	393mmX87mmX65mm	235mmX120mmX65mm
Product name	12-channel relay module single group	16-channel relay module single group	20-channel relay module single group	24-channel relay module single group	26-channel relay module single group
Product picture					
Model	QJ-32R2-H1Z-24V	QJ-36R2-H1Z-24V			
Size(mm)	300mmX120mmX65mm	330mmX120mmX65mm			
Product name	32-channel relay module single group	36-channel relay module single group			

Hongfa Relay Module DC12V/24V(2NO 2NC)

Product picture					
Model	QJ-2RG-H2Z-24V	QJ-4RG-H2Z-24V	QJ-6RG-H2Z-24V	QJ-8RG-H2Z-24V	QJ-10RG-H2Z-24V
Size(mm)	40mmX87mmX65mm	70mmX87mmX65mm	106mmX87mmX65mm	134mmX87mmX65mm	170mmX87mmX65mm
Product name	2-channel relay module dual groups	4-channel relay module dual groups	6-channel relay module dual groups	8-channel relay module dual groups	10-channel relay module dual groups
Product picture					
Model	QJ-12RG-H2Z-24V	QJ-16RG-H2Z-24V	QJ-20RG-H2Z-24V	QJ-24RG-H2Z-24V	QJ-32RG-H2Z-24V
Size(mm)	200mmX87mmX65mm	264mmX87mmX65mm	330mmX87mmX65mm	393mmX87mmX65mm	543mmX87mmX65mm
Product name	12-channel relay module dual groups	16-channel relay module dual groups	20-channel relay module dual groups	24-channel relay module dual groups	32-channel relay module dual groups

Product Selection Table

Fujitsu Relay Module DC24V(2NO 2NC)					
Product picture					
Model	QJ-2RG-F2Z-24V	QJ-4RG-F2Z-24V	QJ-6RG-F2Z-24V	QJ-8RG-F2Z-24V	QJ-10RG-F2Z-24V
Size(mm)	40mmX87mmX65mm	70mmX87mmX65mm	107mmX87mmX65mm	134mmX87mmX65mm	170mmX87mmX65mm
Product name	2-channel relay module dual groups	4-channel relay module dual groups	6-channel relay module dual groups	8-channel relay module dual groups	10-channel relay module dual groups
Product picture					
Model	QJ-12RG-F2Z-24V	QJ-16RG-F2Z-24V	QJ-20RG-F2Z-24V	QJ-24RG-F2Z-24V	QJ-32RG-F2Z-24V
Size(mm)	200mmX87mmX65mm	264mmX87mmX65mm	330mmX87mmX65mm	393mmX87mmX65mm	235mmX120mmX65mm
Product name	12-channel relay module dual groups	16-channel relay module dual groups	20-channel relay module dual groups	24-channel relay module dual groups	26-channel relay module dual groups

Transparent Hongfa Relay Module 16A Single Open 24V					
Product picture					
Model	QJ-4HDE-24V	QJ-8HDE-24V	QJ-10HDE-24V	QJ-16HDE-24V	
Size(mm)	70mmX87mmX65mm	137mmX78mmX55mm	167mm×78mm×55mm	264mmX78mmX55mm	
Product name	4-Channel Hongfa Relay Module Single Open	8-Channel Hongfa Relay Module Single Open	10-Channel Hongfa Relay Module Single Open	16-Channel Hongfa Relay Module Single Open	

Omron Relay Module 1NO 1NC					
Product picture					
Model	QJ-2RO1Z-24V	QJ-4RO1Z-24V	QJ-8RO1Z-24V		
Size(mm)	38mmX98mmX33mm	72mmX98mmX33mm	143mmX98mmX33mm		
Product name	2-Channel Omron Relay Module 1NO 1NC	4-Channel Omron Relay Module 1NO 1NC	8-Channel Omron Relay Module 1NO 1NC		

Boxed Miniature Single Open Relay Module



Omron Boxed Miniature Single Open Relay Module



Panasonic Boxed Miniature Single Open Relay Module

Parameter

Rated current：40.0 mA 16.7 mA 11.1 mA 8.3 mA

Rated voltage：5VDC 12VDC 18VDC 24VDC

Rated load：5A/250VAC 3A/30VDC

Max. switching Voltage：250VAC / 30VDC

Max. switching Current：5A

Contact resistance：Max. 10mΩ

Insulation resistance：Min 1.000mΩ（in 500VDC）

Ambient temperature：-40°C~+85°C

Durability：Electrical：Min 100.000 operations（250V,5A），min 200,000 operations (3A，30 VDC)

Vibration resistance：Destruction：10 to 55 to 10 Hz, 0.75-m single amplitude (1.5-m mdouble amplitude)

Product Selection Table

Boxed Miniature Single Open Relay Module					
Product picture					
Model	QJ-4RS1K-24V	QJ-8RS1K-24V	QJ-16RS1K-24V	QJ-4RO1K-24V	QJ-8RO1K-24V
Size(mm)	100mmX40mmX33mm	100mmX74mmX33mm	145mmX100mmX33mm	100mmX40mmX33mm	100mmX74mmX33mm
Product name	4-Channel Panasonic Boxed Miniature Single Open Relay Module	8-Channel Panasonic Boxed Miniature Single Open Relay Module	16-Channel Panasonic Boxed Miniature Single Open Relay Module	4-Channel Omron Boxed Miniature Single Open Relay Module	8-Channel Omron Boxed Miniature Single Open Relay Module
Product picture					
Model	QJ-16R01K-24V	QJ-2RH-H1ZK	QJ-4RH-H1ZK	QJ-8RH-H1ZK	
Size(mm)	145mmX100mmX33mm	100mmX40mmX33mm	100mmX74mmX33mm	145mmX100mmX33mm	
Product name	16-Channel Omron Boxed Miniature Single Open Relay Module	2-channel Hongfa Boxed Miniature Single Open Relay Module	4-channel Hongfa Boxed Miniature Single Open Relay Module	8-channel Hongfa Boxed Miniature Single Open Relay Module	

Single Contact Relay Module

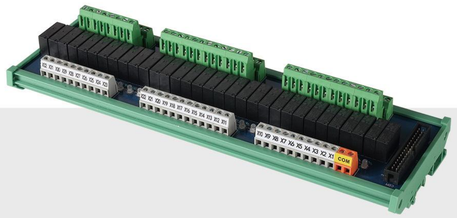

Omron Single Contact Relay Module

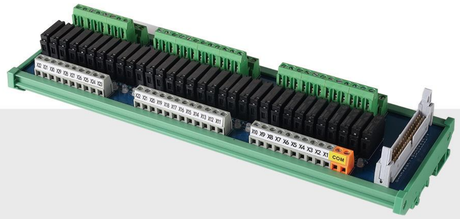

Panasonic Single Contact Relay Module

Parameter

Product name: 32-Point transistor output unit
(with Fujitsu connector, sink output)

Rated voltage: DC12~24V

Operating load voltage range: DC10.2V~DC26.4V

Maximum load current: 0.5A/point, 2.0A/public, 4.0A/unit

Leakage current: 4.0A/point, less than 10 ms

Residual voltage: 1.5V Max.

ON response time: 0.1ms Max.

OFF response time: 0 8ms Max.)

Internal current consumption: DC5V 140mA max.

Number of circuits: 32 (16 points/common, 2 circuits)

Fuse: None

External power supply: DC10.2~26.4V, 30mA min

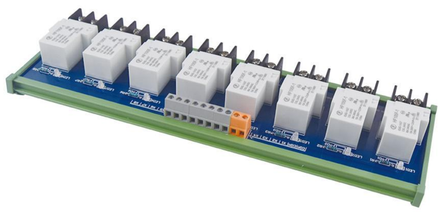

8-Channel Hongfa 30A High Power

Parameter

Operate voltage(VDC)：≤18.00

Rated voltage(VDC)：24V

Current：30A

Maximum switching power：7200VA 600W

Between coil and contact：HF2150:2500VAC 1min
1000mΩ(500VDC)

Coil resistance(Ω)：660×(1±10%)

Release voltage(VDC)：≥2.4

Max. voltage(VDC)：31.2

Contact load（resistive)：30A 240VAC 20A 30VDC

Omron Intermediate Relay



MY4N-GS

Four open and four closed 220/240vac



MY2N-GS

Two open and two closed 220/240VAC



MY4N-GS

Four open and four closed 24vdc



MY2N-GS

Two open and two closed 24vdc

Omron Intermediate Relay Basic Parameter

	2-pole		4-pole	
	Resistive load	Inductive load(cos 0=0.4.L/R=7ms)	Resistive load	Inductive load(cos 0=0.4.L/R=7ms)
Resistive load	2C		4C	
Contact composition	Single contact			
Contact material	Ag			
Rated load	AC220V 5A DC24V 5A	AC220V 2A DC24V 2A	AC220V 3A DC24V 3A	AC220V 0.8A DC24V 1.5A
Rated carry curren	5A		3A	
Maximum contact voltage	AC250V、DC125V		AC250V、DC125V	
Maximum contact current	5A		3A	
Maximum switching capacity	1.100VA 120W		660VA 72W	176VA 36W
Minimum load (reference value)*	DC5V 1mA			

It is a rough reference for the switchable limit in the class of micro-loads such as electronic circuits, and is not a guaranteed value
The changed value may change due to the switching frequency, environment, and expected reliability standards.
Please confirm the actual equipment under actual use conditions.

IDEC Intermediate Relay



RY4S-UL/RN4S-NL

Four open and four closed



RN2S-NL

Two open and two closed



RN2S-CL

Two open and two closed

IDEC 4NO 4NC Intermediate Relay Basic Parameter

Model		RY4S-UL/RN4S-NL	RN2S-NL	RN2S-CL
Rated load (resistive load)		240V AC . 5A 30V AC . 5A	110V AC . 5A 30V AC . 5A 220V AC . 5A	250V AC . 8A 30V DC . 8A
Rated voltage		DC 24V / AC 220 V		
Power consumption (approximately)		1 VA(60HZ) 0.8W	1.2 VA(60HZ) 0.9W	0.9 VA(60HZ) 0.53W
Starting voltage (relative to rated value)		AC:80% max DC:80% max		
Release voltage (relative to rated value)		AC:30% max DC:10% max		
Contact resistance		50mΩmin	30mΩmin	
Pick-up time			20ms min	50mΩmin
Release time		20ms min		
Insulation time		100MΩ max（500V DCMegohmmeter）		
Service life	Mechanical	50,000,00 times min	50,000,00 times min(220V AC 5A)	AC(type):300,000,000 times min DC(type):500,000,000 times min
	Electrical	200,000 times min	500,000 times min	AC(type):200,000,000 times min DC(type):100,000,000 times min
Dielectric strength	Between coil and contact	2,00V AC.one minute		5,00V AC.one minute
	Between contacts of different polarity	1,00V AC.one minute		1,00V AC.one minute
	Between contacts of the same polarity	2,000V AC.one minute		3,000V AC.one minute

Switching Power Supply



Parameter

Wenbo noise：80~50 MVP-P

Stable incoming line：±0.5%

Stable load：±0.5%

Battery capacity： ±1%

Output power： 35~200W

▸ Omron Switching Power Supply



Parameter

Product name: LRS series

Frequency: 50/60HZ

Traffic input range: Switching by switch

Surge input: Can withstand 300VA/5 seconds

Installation: Rail installation

Vibration test: Can withstand 5G

No-load power: <0.75W

Working temperature: 70°C

Application scope: Industrial control system/semiconductor manufacturing system/factory automation/mechanical and electrical equipment, etc.

▸ Mean Well Switching Power Supply

Product Selection Table

Omron Switching Power Supply

Product picture					
Model	S8FS-35W	S8FS-50W	S8FS-100W	S8FS-150W	S8FS-200W
Size(mm)	100mmX97mmX37mm	130mmX97mmX37mm	158mmX97mmX37mm	200mmX97mmX37mm	215mmX97mmX37mm
Product name	35W(output24VDC 1.5A)	50W(output24VDC 2.2A)	100W(output 24VDC 5A)	150W(output 24VDC 6.5A)	200W(output 24VDC 8A)

LRS Series Mean Well Switching Power Supply

Product picture					
Model	LRS-35W-5V	LRS-50W-5V	LRS-200W-5V	LRS-350W-5V	LRS-35W-12V
Size(mm)	99mmX82mmX30mm	99mmX82mmX30mm	215mmX115mmX30mm	215mmX115mmX43mm	99mmX82mmX30mm
Product name	LRS Series 5V 35W	LRS Series 5V 50W	LRS Series 5V 200W	LRS Series 5V 350W	LRS Series 12V 35W
Product picture					
Model	LRS-50W-12V	LRS-75W-12V	LRS-100W-12V	LRS-150W-12V	LRS-200W-12V
Size(mm)	99mmX82mmX30mm	99mmX87mmX30mm	129mmX97mmX30mm	159mmX97mmX30mm	215mmX115mmX30mm
Product name	LRS Series 12V 50W	LRS Series 12V 75W	LRS Series 12V 100W	LRS Series 12V 150W	LRS Series 12V 200W
Product picture					
Model	LRS-350W-12V	LRS-35W-24V	LRS-50W-24V	LRS-75W-24V	LRS-100W-24V
Size(mm)	215mmX115mmX30mm	99mmX82mmX30mm	99mmX82mmX30mm	99mmX97mmX30mm	129mmX97mmX30mm
Product name	LRS Series 12V 350W	LRS Series 5V 350W	LRS Series 24V 50W	LRS Series 24V 75W	LRS Series 24V 100W

LRS Series Mean Well Switching Power Supply

Product picture					
Model	LRS-150W-24V	LRS-200W-24V	LRS-350W-24V	LRS-450W-24V	LRS-600W-24V
Size(mm)	159mmX97mmX30mm	215mmX115mmX30mm	215mmX115mmX30mm	229mmX127mmX46mm	229mmX127mmX46mm
Product name	LRS Series 24V 150W	LRS Series 24V 200W	LRS Series 24V 350W	LRS Series 24V 450W	LRS Series 24V 600W

Product Selection Table

LRS Series Mean Well Switching Power Supply

Product picture					
Model	LRS-320W-24V	LRS-500W-24V	EDR-75W-24V	EDR-120W-24V	LRS-150W-24V
Size(mm)	215mmX115mmX30mm	224mmX127mmX41mm	125mmX110mmX41mm	125mmX110mmX41mm	125mmX110mmX41mm
Product name	RSP Series 24V 320W	RSP Series 24V 500W	LRS Series 24V 75W	EDR Series 24V 120W	EDR Series 24V 150W
Product picture					
Model	NED-75W-24V	NDR-120W-24V	NDR-240W-24V	NDR-480W-24V	
Size(mm)	125mmX110mmX32mm	124mmX113mmX45mm	124mmX117mmX64mm	124mmX129mmX86mm	
Product name	NDR Series 24V 75W	NDR Series 24V 120W	LRS Series 24V 240W	EDR Series 24V 480W	

Serial Port Server



2-Channel Serial Server

Parameter

Power Input: DC 9~32V (With Reverse Connection Protection)

Full-load Power Consumption: <1.5W@DC12V

Connection Type: 2-position 5.08mm pitch terminal blockor o2.5mm DCjack

Installation Method: Wall-mounted installation

Enclosure Protection: IP40 (Protection against solid objectsgratertare1omm. no protecton

Operating Temperature: -40°Cto +85°C

Relative Humidity: 5% to 95% (non-condensing)

Baud rate: 1200 to 230400 bps

Product Selection Table

Serial Server

Product picture					
Model	QJ-SL-CH1	QJ-SL-CH2			
Size(mm)	100mmX105mmX26mm	160mmX90mmX26mm			
Product name	1-Channe lindustrial serial port server	2-Channe lindustrial serial port server			

Testing and Production Equipment


Equipment Inspection


Product Testing


PLC Testing



Fully Automatic SMTPlacement Machine


Fully Automatic SMTPlacement Machine


Packaging Machine


Potting Machine


Wave soldering


Beveling Machine

Application Scenarios


Production Equipments


Environmental Engineering


Greenhouse Planting


Animal Husbandry


Smart Home

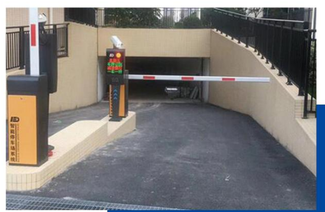
Parking System

Customized Products

Customers give customizedrequirements › Specialized teams provide solutions › Signing of the contract by both parties confirming the program › R&D, design, sampling and customer confirmation › Mass production according to prototype

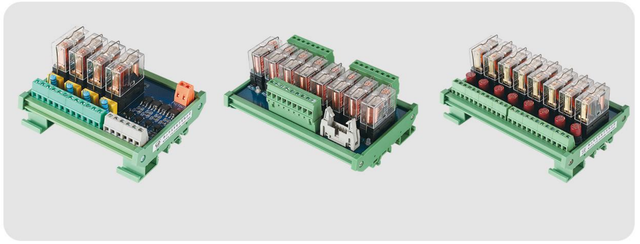
Dedicated Interface Relay Expansion Module Customization

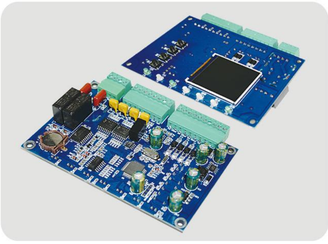
Telecom room thermostat, dehu midification master control customization

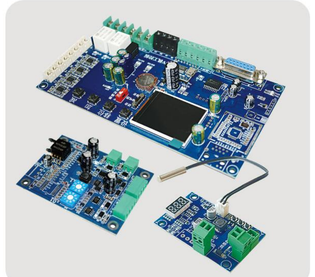
Heating, negative pressure, UV machine main control customization

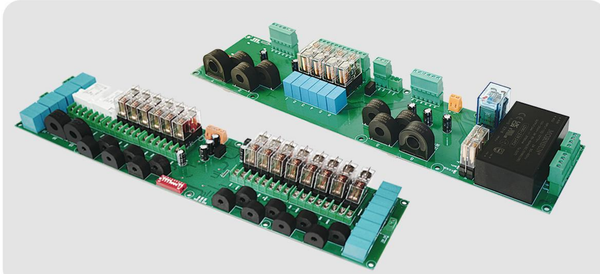
Current, voltage, power detection and combination control

Application Cases

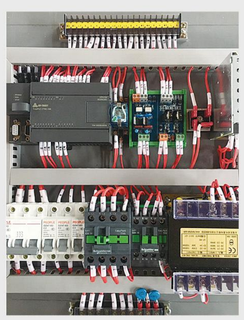
Waterjet Cutting Machine

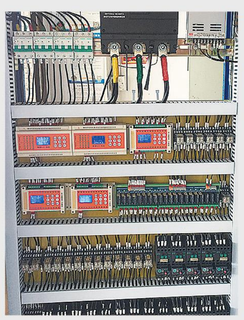
Environmental protection and sewage works

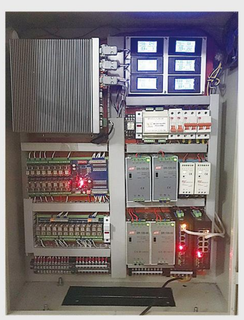
Highway Intersection ETC System


Fisheries farming systems