DeltaV™ M-series Traditional I/O



The DeltaV™ I/O Subsystem is Easy to Install and Maintain.

- Decreases capital equipment costs
- Decreases installation time and expense
- Increases productivity
- Increases process availability

Introduction

Traditional I/O is a modular subsystem that offers flexibility during installation. It's designed to be installed in the field, near your devices. Traditional I/O is equipped with function and field wiring protection keys to ensure that the correct I/O card is always plugged into the corresponding terminal block. Modularity, protection keys, and plug-and-play capabilities make DeltaV™ Traditional I/O a smart choice for your process control system.

Benefits

Decreases Capital Equipment Costs

Full System Modularity: The Traditional I/O subsystem was designed with your investment in mind. All components are fully modular and may be installable under power. You add I/O interface carriers and I/O interfaces in groups of 4, 8, 16, or 32 channels as you need them. The modular design enables you to purchase the exact amount of I/O cards, 8-wide or 4-wide carriers, power/ controllers, and 2-wide carriers you need and add more DeltaV I/O as your system grows.

I/O Card Redundancy

Redundant I/O cards are available for critical applications. The same card can be used in simplex or redundant applications. When installed on a two-wide redundant terminal block, the cards are recognized as a redundant pair by the controller. The controller scans each card and determines which card is acting as the active interface. When a fault is detected, the system automatically switches to the standby I/O card.

DeltaV Control modules reference simplex and redundant I/O channels identically and there is no special configuration required to take advantage of redundancy.

Switchover of a redundant I/O card is completed within two scans of the I/O bus. Make-before-break contacts ensure digital field instruments remain powered and the process is undisturbed. Analog output signals are briefly driven by both cards for < 5 ms during switchover of the card.

Hardware Alerts automatically report hardware integrity errors for both the primary and secondary cards. Any event that causes a switchover is also reported automatically through the system hardware alerts and is logged in the Event Chronicle.

Events that can cause a switchover include:

- Hardware failure within the active card.
- Communications failure between the active card and the controller.
- Detection of a fault in the field wiring.

A switchover may also be initiated from the diagnostics explorer, and the health and status of both cards and their channels are available in the diagnostics explorer.

The system automatically commissions a new standby card. In safe areas, failed cards can be replaced under power. In hazardous areas, appropriate installation procedures must be followed.

Hardware Specifications

Common Environmental Specifications for all I/O Interfaces	
Category	**Specifications**
Operating Temperature*	-40 to 70°C (-40 to 158°F)
Storage Temperature	-40 to 85°C (-40 to 185°F)
Relative Humidity	5 to 95%, non-condensing
Airborne Contaminants	ISA-S71.04-1985 Airborne Contaminants Class G3 Conformal coating
Protection Rating	IP 20
Shock	10 g ½-sine wave for 11 ms
Vibration	1 mm peak-to-peak from 5 to 16 Hz; 0.5 g from 16 to 150 Hz
Dimensions	H 10.7 cm (4.2 in.) W 4.1 cm (1.6 in.) Depth 10.5 cm (4.1 in.)

*Operating any electronics at the higher end of its temperature range for long periods of time will shorten its expected lifetime, see **Effects of Heat and Airflow Inside an Enclosure** White Paper for more information.

Analog Output I/O Cards

Item	Specification
Number of Channels	Eight
Isolation	Each channel is optically isolated from the system and factory tested to 1500V DC
Nominal Signal Range (span)	4 to 20 mA
Full Signal Range	1 to 23 mA
LocalBus Current (12V DC nominal) per Card	100 mA typical, 150 mA maximum
Field Circuit Power per Card	300 mA maximum @ 24V DC (+/-10%)
Accuracy Over Temperature Range	0.25% of span
Resolution	12-bit
Output Compliance	20 mA at 21.6V DC supply into 700 ohms load
Calibration	Information stored on card.
Optional Fuse	2.0 A

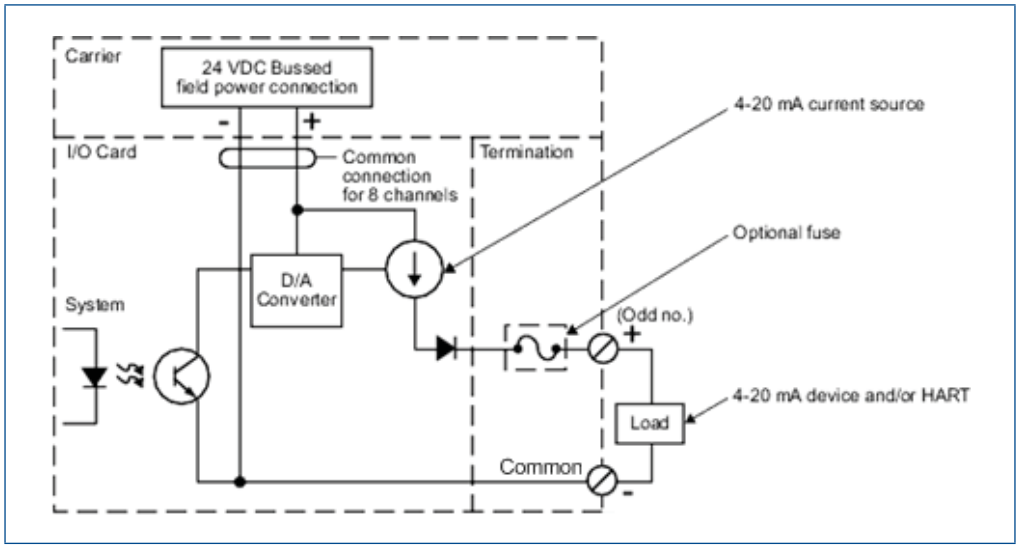

Simplified Circuit and Connection Diagram for Simplex AO Card, 8-channel, 4 to 20 mA, HART.

In addition to standard signal wiring, some cards may also be ordered with Mass Terminal blocks that allow these cards to be connected to the M-series Mass Connection Solutions or third party wiring solutions from Phoenix or if IS Barriers are required from Pepperl and Fuchs, mounted in an adjacent cabinet to meet special signal conditioning or for optimizing field wiring solutions. Please refer to the Alliance Program website for details on approved third-party products.

- 10-pin Mass Termination Block (simplex only)
- 16-pin Mass Termination Block (simplex only)
- 24-pin Mass Termination Block (simplex only)
- 40-pin Mass Termination Block (simplex and redundant)
- 48-pin Mass Termination Block (simplex and redundant)

Traditional I/O and Terminal Block Compatibility

I/O Card	I/O Card Keying	Traditional I/O Terminal Blocks	Mass Termination Blocks
AI, 8-Channel, 4–20 mA, HART	A1	I/O terminal block Fused I/O terminal block 4-wire I/O terminal block	16-pin Mass termination block (Supports 2-wire Devices) 24-pin Mass termination block (Supports 4-wire Devices)
AI Plus, 16-Channel, 4-20 mA, HART	A6	16-Channel 2-Wire AI terminal block for Series 2 Plus 16-Channel 4-Wire AI terminal block for Series 2 Plus Redundant 2- & 4-Wire terminal block	48-pin AI Mass termination block for Series 2 Plus Redundant 48-pin AI Mass termination block for Series 2 Plus
AO, 8-Channel, 4–20 mA, HART	A4	I/O terminal block Fused terminal block	16-pin Mass termination block
AO Plus, 16-Channel, 4-20 mA, HART	A5	16-Channel AO terminal block for Series 2 Plus Redundant 16-Channel AO terminal block for Series 2 Plus	48-pin AO Mass termination block for Series 2 Plus Redundant 48-pin AO Mass termination block for Series 2 Plus
Thermocouple, mV	C1	I/O terminal block Cold Junction Compensated (CJC) terminal block	NA
RTD, 8-Channel	C3	Resistant Temperature Device (RTD) terminal block	NA
DI, 8-Channel, 24V DC, Dry Contact	B1	I/O terminal block Fused terminal block	16-pin Mass termination block
DI, 8-Channel, 24V DC, Isolated	B2	I/O terminal block Fused terminal block	16-pin Mass termination block
DI, 32-Channel, 24V DC, Dry Contact	B3	32-Channel terminal block	40-pin Mass termination block
DI Plus, 32-Channel, 24V DC, Dry Contact	E3	32-Channel DI terminal block for Series 2 Plus Redundant 32-Channel DI terminal block for Series 2 Plus	40-pin DI Mass termination block for Series 2 Plus Redundant 40-pin DI Mass termination block for Series 2 Plus

Certifications

The following certifications are available for M-series Traditional I/O (see actual certificates for exact certifications for each product):

- **CE**

  EMC: EN 61326-1

- **FM**

  FM 3600

  FM 3611

- **CSA**

  CSA C22.2 No. 213

  CSA C22.2 No. 1010-1

- **ATEX**

  EN60079-0

  IEC60079-7

  EN60079-15

- **IEC-Ex**

  IEC60079-0

  IEC60079-7

  IEC60079-15

- **Marine Certifications:** IACS E10

  ABS Certificate of Design Assessment

  DNV Marine Certificate

Hazardous Area/Location

M-series Traditional I/O Cards can be installed and used based on the following standards (see actual certificates for exact product markings for each product):

- **FM (USA)**

  Class I, Division 2, Groups A, B, C, D, T4

- **cFM (Canada)**

  Class I, Division 2, Groups A, B, C, D, T4

- **ATEX**

  II 3G Ex ec IIC T4 Gc

  II 3G Ex ec [ic] IIC T4 Gc

  II 3G Ex nA nC IIC T4 Gc

- **IEC-Ex**

  II 3G Ex ec IIC T4 Gc

  II 3G Ex ec ic IIC T4 Gc

  II 3G Ex nA nC IIC T4 Gc

Regarding the Installation instructions please refer to the following Documents:

Class 1 Division 2 Installation Instructions DeltaV™ M-series	12P1293
Zone 2 Installation Instructions DeltaV M-series	12P2046

Analog Output Cards and Termination Blocks	
Description	**Model Number**
8 Channels 4-20 mA, HART	
Standard I/O Termination Block	VE4005S2B1**
Redundant Standard I/O Termination Block	VE4035S2B1**
Fused I/O Termination Block	VE4005S2B2**
16-Pin Mass Termination Block	VE4005S2B3**
16 Channels 4-20 mA, HART, Plus Card	
16-Channel AO Terminal Block for Series 2 Plus	VE4005S2B4
Redundant 16-Channel AO Terminal Block for Series 2 Plus	VE4035S2B4
48-pin AO Mass Termination Block for Series 2 Plus (to be used with P+F HiC IS barriers and termination boards for DeltaV DCS)	VE4005S2B5
48-pin AO Mass Termination Block for Series 2 Plus including 16-channel Analog Mass Connection Boards*	VE4055S2B5
Redundant 48-pin AO Mass Termination Block for Series 2 Plus (to be used with P+F HiC IS barriers and termination boards for DeltaV DCS)	VE4035S2B5
Redundant 48-pin AO Mass Termination Block for Series 2 Plus including 16-channel Analog Mass Connection Boards*	VE4085S2B5

*For more details on the Mass Connection Boards and connection cables, please refer to the **M-series Mass Connection Solutions** PDS.

**Supported on DeltaV v10.3.1 and later. If card will be used on earlier DeltaV versions, please request KJ3221X1-BA2.