DATA SHEET

vibro-meter®

CA134 piezoelectric accelerometer

CA134
(sensor only version)

KEY FEATURES AND BENEFITS

- From the vibro-meter® product line
- Sensitivity: 10 pC/g
- Frequency response: 0.5 to 6000 Hz
- Temperature range:
  −54 to 500 °C
  −253 °C (20 K) to 500 °C for cryogenic version
- Ex certified for use in hazardous areas (potentially explosive atmospheres)
- Symmetrical sensor with internal case insulation and differential output
- Hermetically welded high-temperature nickel alloy case
- Available as a sensor only or with an integral cable

APPLICATIONS

- Vibration monitoring over a wide temperature range, including cryogenic temperatures
- Hazardous areas (potentially explosive atmospheres) and/or harsh industrial environments

DESCRIPTION

The CA134 is a high-temperature piezoelectric accelerometer from Parker Meggitt's vibro-meter® product line.

The CA134 sensor features a compression-mode measuring element with internal case insulation in a high-temperature nickel alloy case (housing).

The CA134 is available as a sensor only or fitted with an integral mineral-insulated (MI) cable that is protected by a double braid and terminated with a vibro-meter® high-temperature connector. The sensor and cable are hermetically welded to produce a sealed leaktight assembly. The sensor only version allows different cable assemblies to be used depending on the environmental/temperature requirements of the application.

All versions of the CA134 are Ex certified for installation in potentially explosive atmospheres (hazardous areas).

The piezoelectric material used and the design of the CA134 ensures an extremely stable and reliable device that is suitable for the long-term monitoring and measurement of vibration over wide temperature ranges in severe environments, such as gas turbines or cryogenic applications.

For specific applications, contact your local Parker Meggitt representative.

Information contained in this document may be subject to export control regulations of the European Union, USA or other countries. Each recipient of this document is responsible for ensuring that the transfer or use of any information contained in this document complies with all relevant export control regulations. ECN N/A.

SPECIFICATIONS

General

Input power requirements	: None
Signal transmission	: 2-pin system, insulated from case, charge output
Signal processing	: Charge converter (IPC70x signal conditioner)

Operating

(At 23°C ±5°C, 73°F ±9°F)

Sensitivity (at 120 Hz with 5 g, see Calibration on page 4)	: 10 pC/g ±5%
Dynamic measurement range	: 0.001 to 500 g peak
Overload capacity (spikes)	: Up to 1000 g peak
Linearity	: ±1% over dynamic measurement range
Transverse sensitivity	: <5%
Resonant frequency	: >14 kHz nominal
Frequency response	
• 0.5 to 3500 Hz	: ±5% (lower cutoff frequency is determined by the signal conditioner)
• 3500 to 6000 Hz	: <10%
Internal insulation resistance	: 10^8 Ω minimum at 23°C (73°F). 10^5 Ω minimum at 500°C (932°F).
Capacitance	
• Sensor head	: 20 pF nominal between pin (+ or −) and case (ground). 450 pF nominal between pins (+ and −).
• MI cable (integral cable version only)	: 350 pF/m nominal between pin (+ or −) and case (ground). 220 pF/m nominal between pins (+ and −).

Environmental

Temperature range	
• Continuous operation	: −54 to 500°C (−65 to 932°F). Note: Cryogenic version has a minimum operating temperature of −253°C (20 K).
• Short-term survival	: −70 to 520°C (−94 to 968°F). Note: Cryogenic version has a minimum survival temperature of −253°C (20 K).
Maximum temperature error (with respect to 23°C, 73°F)	
• −253°C (20 K)	: −5%
• 500°C	: +10%
Corrosion, humidity	: Special high-temperature nickel alloy, stainless steel, hermetically welded
Shock acceleration	: <2000 g peak (half sine, 1 ms duration) along sensitive axis
Base strain sensitivity	: $\leqslant 5 \times 10^{-3}$ g/με

SPECIFICATIONS *(continued)*

Potentially explosive atmospheres

Ex approved for use in hazardous areas

Type of protection Ex i: intrinsic safety		
Europe	EC type examination certificate	Ⓔx II 1 G (Zones 0, 1, 2) Ex ia IIC T6…510°C Ga LCIE 02 ATEX 6110 X
International	IECEx certificate of conformity	Ex ia IIC T6…510°C Ga IECEx LCI 06.0008X *Note: Not engraved/marked on the product.*
North America	cCSAus certificate of compliance	Class I, Division 1, Groups A, B, C, D Ex ia (T6…T1) cCSAus 1636188
Korea	KGS certificate of conformity	Ex ia IIC T6 to T510°C KGS 14-GA4BO-0130X *Note: Not engraved/marked on the product, except for PNR 144-134-000-612.*
Japan	TIIS certificate of conformity	ib IIC T1 TIIS TC 20432 *Note: PNR 144-134-000-611 only. Not engraved/marked on the product.*
		ib IIC T1 TIIS TC 20544 *Note: PNR 144-134-000-612 only. Not engraved/marked on the product.*
Brazil	INMETRO certificate of conformity	Ex ia IIC T6…510°C Ga BVC20.3862-X *Note: Not engraved/marked on the product, except for PNR 144-134-000-612/613.*
China	CNEx Certificate	Ex ia IIC T6~T510°C Ga CNEx 22.2014X *Note: Not engraved/marked on the product.*
Russian Federation	EAЭC RU certificate of conformity	0Ex ia IIC T6…510°C Ga X EAЭC RU C-CH.АД07.B.03042/21 *Note: Not engraved/marked on the product, except for PNR 144-134-000-203.*

SPECIFICATIONS *(continued)*

Type of protection Ex nA: non-sparking		
Europe	Voluntary type examination certificate	Ⓔx II 3G (Zone 2) Ex nA IIC T6…510°C Gc LCIE 09 ATEX 1043 X
International	IECEx certificate of conformity	Ex nA IIC T6…510°C Gc IECEx LCI 10.0017X *Note: Not engraved/marked on the product.*
Brazil	INMETRO certificate of conformity	Ex nA IIC T6…510°C Gc BVC20.3863-X *Note: Not engraved/marked on the product, except for PNR 144-134-000-612/613.*
Russian Federation	EAЭC RU certificate of conformity	2Ex nA IIC T6…510°C Gc EAЭC RU C-CH.АД07.B.03042/21 *Note: Not engraved/marked on the product, except for PNR 144-134-000-203.*

⚠ **For specific parameters of the mode of protection concerned and special conditions for safe use, refer to the Ex certificates that are available from Parker Meggitt.**

⚠ **For the most recent information on the Ex certifications that are applicable to this product, refer to the *Ex product register (PL-1511) document* that is available from Parker Meggitt.**

Approvals

Conformity	:	European Union (EU) declaration of conformity (CE marking). EAC marking, Eurasian Customs Union (EACU) certificate/declaration of conformity.
Electromagnetic compatibility (EMC)	:	EMC compliant (2014/30/EU): EN 61000-6-2:2005. EN 61000-6-4:2007 + A1:2011.
Electrical safety	:	EN 61010-1:2010
Environmental management	:	RoHS compliant (2011/65/EU)
Hazardous areas	:	Ex approved (see Potentially explosive atmospheres on page 3)

Calibration

Dynamic calibration at factory at 5 g peak and 120 Hz (23°C, 73°F). No subsequent calibration necessary.

SPECIFICATIONS *(continued)*

Physical

Case (housing) material	: Special high-temperature nickel alloy and stainless steel
Dimensions	: See Mechanical drawings starting on page 6
Weight	
• Sensor head	: 120 g (0.26 lb) approx.
• MI cable (integral cable version only)	: 140 g/m (0.094 lb/ft) approx.
Mounting	: Three M4 × 16 Allen screws and three M4 spring-lock washers with a nominal tightening torque of 4 N•m (3 lb-ft). Note: Electrical insulation of the mounting surface is not required. See Mounting adaptors in Accessories on page 8. Refer also to the *Vibration measurement chains using CAxxx piezoelectric accelerometers installation manual*.
Connector	
• Sensor only version	: High-temperature, rugged circular, threaded coupling, 2-pin connector with keyway (vibro-meter® 7/16″-27UNS-2A / CG505). Mates with connectors used by the recommended cable assemblies (vibro-meter® 7/16″-27UNS-2B or CG505).
• Integral cable version	: vibro-meter® high-temperature connector (Hex. 7/16″). Mates with connectors used by the recommended extension cable assemblies (vibro-meter® 7/16″-27UNS-2B or CG505).
Recommended cable assemblies (sensor only version)	: EC069, EC112, EC119, EC222 or EC390. See Cable assemblies in Accessories on page 8.
Recommended extension cable assemblies	: EC119, EC222 or EC390. See Cable assemblies in Accessories on page 8.

MECHANICAL DRAWINGS

Sensor only version

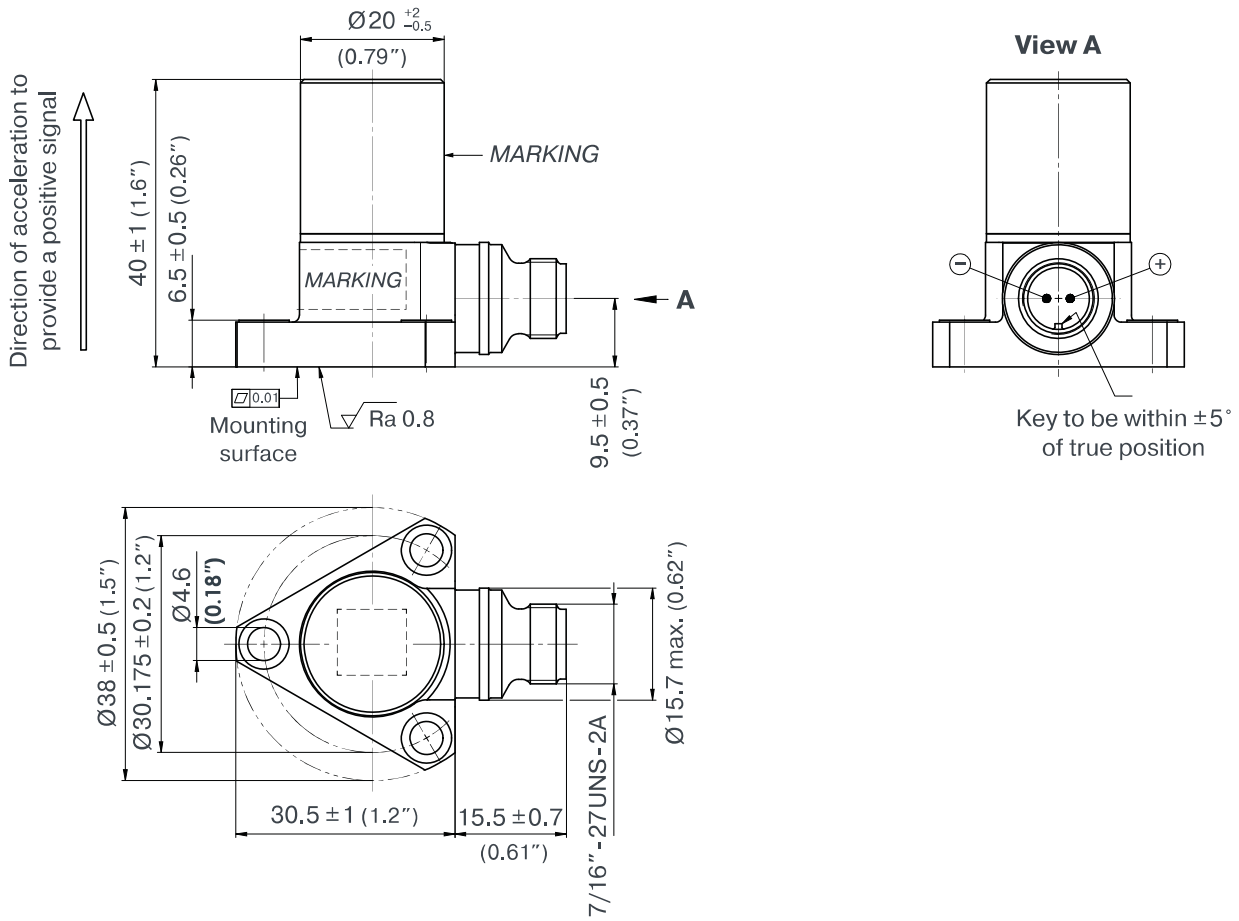

Note: All dimensions are in mm (in) unless otherwise stated.

MECHANICAL DRAWINGS *(continued)*

Integral cable version

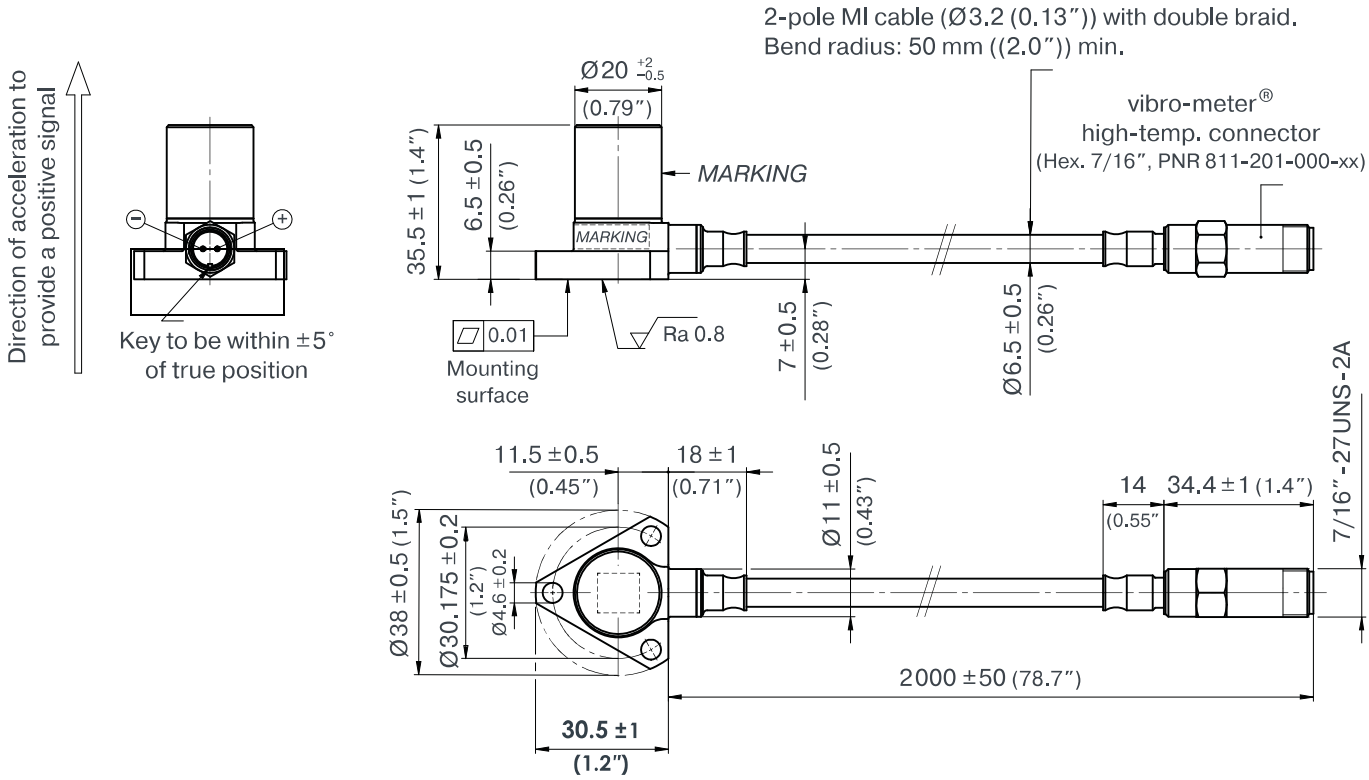

Wiring diagram

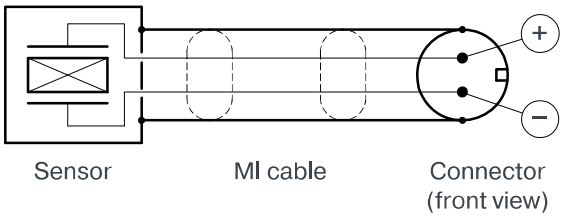

Note: All dimensions are in mm (in) unless otherwise stated.

ORDERING INFORMATION

To order please specify

Type	Designation	Part number (PNR)
CA134	Different versions of the CA134 piezoelectric accelerometer:	
	– Sensor only version	144-134-000-203
	– Integral cable version	144-134-000-613
	Note: The integral cable is a 2 m cable length, mineral-insulated (MI) cable with double braid, terminated with a vibro-meter® high-temperature connector.	

ACCESSORIES

Item	Type	Part number (PNR)
Cable assemblies	EC069 High-temperature cable assembly with vibro-meter® high-temperature connector to vibro-meter® high-temperature connector, and mineral-insulated (MI) cable. Up to 650°C (1202°F). Refer to product drawing 921-069-000D101.	921-069-000-x01
	EC112 Cable assembly with vibro-meter® high-temperature connector to vibro-meter® LEMO type 0 connector, and mineral-insulated (MI) cable. Refer to product drawing 921-112-000D501.	921-112-000-5x1
	EC119 Cable assembly with vibro-meter® CG505 connector to flying leads, and low-noise, shielded, twisted pair cable (K205A) with sealed flexible protection (leaktight). Refer to product drawing 922-119-000D003.	922-119-000-003
	EC222 Cable assembly with vibro-meter® CG505 connector to flying leads, and low-noise, shielded, twisted pair cable (K221). Refer to product drawing 922-222-000D002.	922-222-000-002
	EC390 Cable assembly with vibro-meter® CG505 connector to flying leads, and low-noise, shielded, twisted pair cable (K231) with sealed flexible protection (leaktight). Refer to product drawing 922-390-000D003.	922-390-000-003
Note: The cable length must be specified when ordering a cable assembly.		
Mounting adaptors	TA104 Mounting adapter for CA/CE13x and CA/CE28x, with stainless-steel hexagonal base with M8 stud. Refer to product drawing 144-136-301D101.	144-136-301-101

Parker Hannifin Corporation – usually referred to as just Parker – is a global leader in motion and control technologies, providing precision-engineered solutions for a wide variety of mobile, industrial and aerospace markets. For more than a century the company has been enabling engineering breakthroughs that lead to a better tomorrow.

Parker Meggitt joined the Parker Aerospace Group in September 2022 following the successful acquisition of Meggitt PLC, a world leader in aerospace, defense and energy. This includes the Meggitt facility in Fribourg, Switzerland, operating as the legal entity Meggitt SA (formerly Vibro-Meter SA). Accordingly, the vibro-meter® product line is now owned by Parker.

All information in this document, such as descriptions, specifications, drawings, recommendations and other statements, is believed to be correct and reliable. Although given in good faith, the accuracy and/or completeness of such data is not guaranteed or legally binding on Parker Meggitt (Meggitt SA) and we reserve the right to alter any part of this document/publication without prior notice. Before acquiring and/or using this product, you should evaluate it and determine if it is suitable for your intended application. You should also check our website at www.meggittsensing.com/energy to ensure that the latest versions of documentation are being used. For example, data sheets, certificates, product drawings, user manuals, service bulletins and/or other instructions affecting the product.

Unless expressly agreed in writing with Parker Meggitt, you assume all risks and liability associated with use of the product. Any recommendations and advice given without charge, whilst given in good faith, are not legally binding. We take no responsibility for any statements related to the product which are not contained in a current Parker Meggitt publication, nor for any statements contained in extracts, summaries, translations or any other documents not authored and produced by us.

The certifications and warranties applicable to the products supplied by Parker Meggitt are valid only for new products purchased directly from us or an authorized distributor.

In this publication, a dot (.) is used as the decimal separator and thousands are separated by thin spaces. Example: 12345.67890.

Copyright© 2025 Parker Meggitt. All rights reserved.

Sales offices and distributors

Parker has sales offices and distributors all around the world. For information on your local contact, please visit our website.

Local representative

Parker Meggitt (Meggitt SA) office

Parker Meggitt,
Motion, Power & Sensing Division (MPSD).
Meggitt SA, Route de Moncor 4, Case postale,
1701 Fribourg, Switzerland.
www.meggittsensing.com/energy
www.meggitt.com
www.parker.com