22.10.1 CC-GDOL11 Digital Output IOTA

Figure 22.21 CC-GDOL11 Digital Output IOTA assembly layout

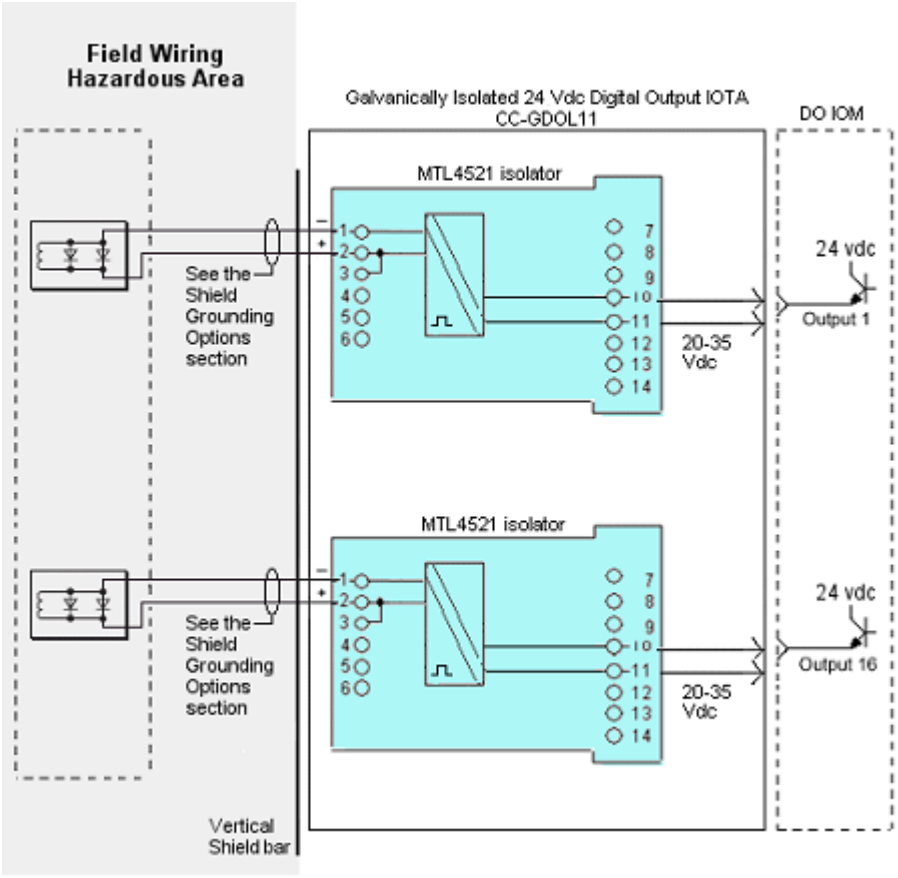

Digital Output supported isolator characteristics (MTL4521)

The following table defines basic features for the MTL4521 DI isolator. A 24V logic signal applied across terminals 8 and 9 allows the solenoid/alarm to be operated by the control input. If the logic signal is disconnected, the solenoid/alarm is off.

Table 22.5 DO IOTA and its supporting isolator

Item	MTL4521 CC-GDOL11
Maximum current consumption	90mA at 24V
Maximum power dissipation within isolator	1.4W at 24V
Safety description	Vo=25V Io=147mA Po=919mW Um = 253V rms or dc
LED status	On = Output state 12.8v at 48 mA

Figure 22.22 Digital Output - MTL4521 isolator LED indicators

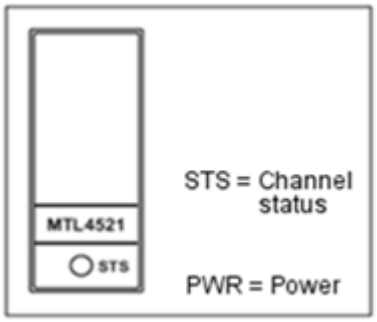

22.10.2 CC-GDOL11 Digital Output IOTA

Figure 22.23 CC-GDOL11 Digital Output IOTA assembly layout

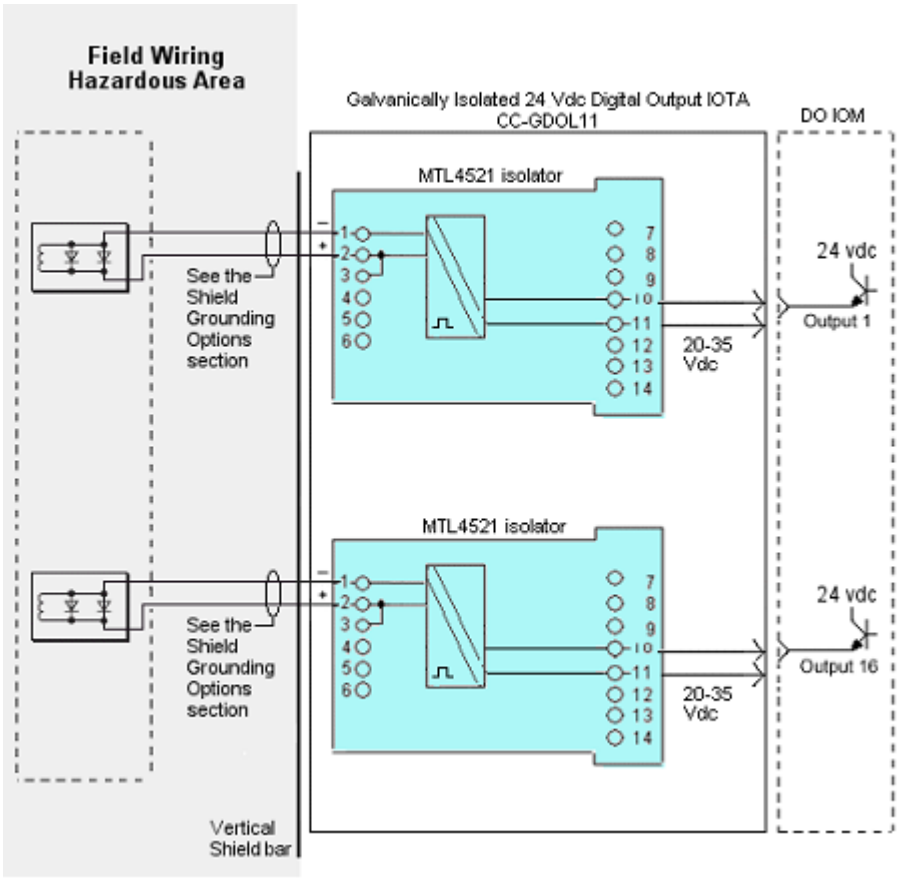

Digital Output supported isolator characteristics (MTL4521)

The following table defines basic features for the MTL4521 DI isolator. A 24V logic signal applied across terminals 8 and 9 allows the solenoid/alarm to be operated by the control input. If the logic signal is disconnected, the solenoid/alarm is off.

Table 22.6 DO IOTA and its supporting isolator

Item	MTL4521 CC-GDOL11
Maximum current consumption	90mA at 24V
Maximum power dissipation within isolator	1.4W at 24V
Safety description	Vo=25V Io=147mA Po=919mW Um = 253V rms or dc
LED status	On = Output state 12.8v at 48 mA

Figure 22.24 Digital Output - MTL4521 isolator LED indicators

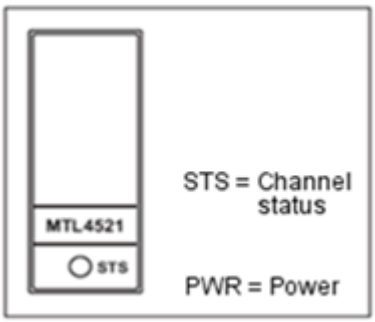

22.11 GI/IS Digital I/O Expander Model CC-SDXX01

The GI/IS Digital Input/Output Expander board is displayed below. There are two versions of the CC-SDXX01 IOTA board available. The change between the two versions is solely based on changing the labels corresponding to the channels:

- Rev A board shows labels M1 through M16
- Rev B board shows labels M17 through M32

This IOTA allows galvanically isolated inputs from the following isolators:

- MTL4511 - one channel with line fault detection
- MTL4521 - loop-powered, IIC
- MTL4599 - dummy, terminates unused connectors