© Siemens AG 2016

Communication modules, RFID standard cables, SCALANCE network components

5



5/2 **Communication modules for RFID systems and optical identification**

5/4 ASM 456, RF160C

5/9 RF180C, RF182C, RFID 181EIP

5/16 RF170C

5/19 RF120C

5/22 ASM 475

5/25 **RFID standard cables**

5/27 **SCALANCE network components**

5/28 Industrial Ethernet switches SCALANCE X

5/30 Industrial Wireless LAN SCALANCE W

© Siemens AG 2016

Overview

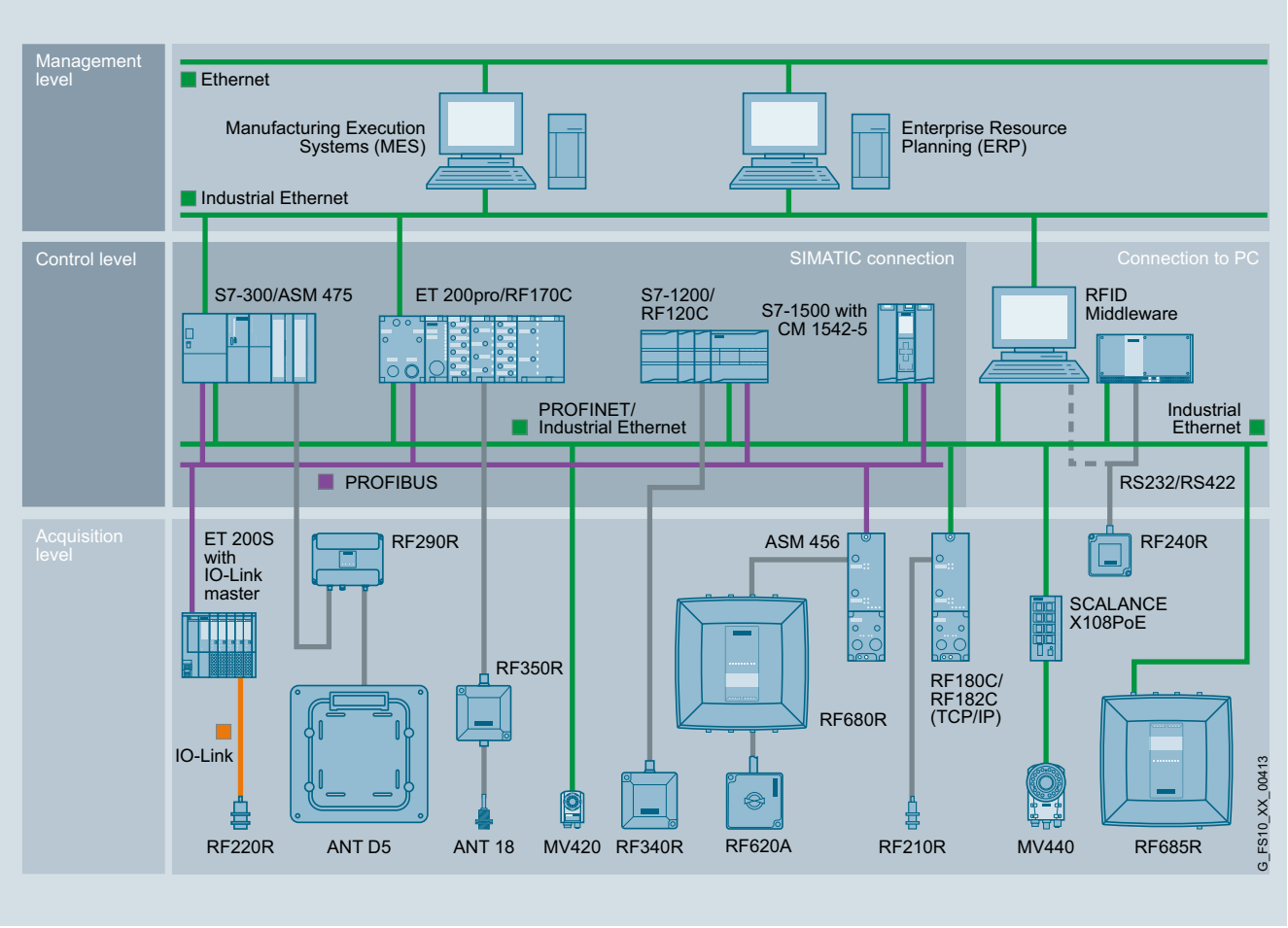

SIMATIC Ident integration graphics

There are various powerful communication modules (ASM) for integrating SIMATIC RFID, SIMATIC MV and MOBY identification systems in SIMATIC, SINUMERIK, SIMOTION, PROFIBUS, PROFINET and Ethernet/IP.

© Siemens AG 2016

Selection aid for communication modules and software

System	Communication modules without file handler	Identification system	Available software
SIMATIC S7-1200	RF120C	RF200, RF300, RF600, MV400, MOBY D	Ident-Library (Read, Write, Reset_Reader etc.)
SIMATIC S7-300 (direct), S7-300/400, PC with SIMATIC WinAC via ET 200M, SINUMERIK 840D/810D	ASM 475	RF200, RF300, RF600, MV400, MOBY D	FB 45, FB 55
Serial link, to PC, PLC or any other system[1)]	Direct via SLG Dx	MOBY D	MOBY D MDWAPI, MOBY API, C library incl. drivers for Windows XP/7
	Direct via RF2xxR, RF3xxR (RS422 / RS232) reader	RF200, RF300	
PROFIBUS DP (SIMATIC S7, PC, any other system[1)])	RF160C	RF200, RF300, RF600, MOBY D	FC 44 for S7-300/400, PC with SIMATIC WinAC
SIMATIC S7, PC with SIMATIC WinAC, via ET 200pro	RF170C	RF200, RF300, RF600, MV400, MOBY D	FB 45, FB 55 (S7-300/400 only), Ident profile, Ident Library (for all S7; Read, Write, Reset_Reader etc.)
PROFIBUS DP-V1 (SIMATIC S7, SIMOTION SCOUT, PC, any other system[1)])	ASM 456	RF200, RF300, RF600, MV400, MOBY D	FB 45, FB 55 (S7-300/400 only), FB101/116/132, Ident profile, Ident Library (for all S7; Read, Write, Reset_Reader etc.)
PROFINET IO	RF180C	RF200, RF300, RF600, MV400, MOBY D	FB 45, FB 55 (S7-300/400 only), FB 101/116/132, Ident profile, Ident Library (for all S7; Read, Write, Reset_Reader etc.)
Ethernet TCP/IP	RF182C	RF200, RF300, RF600, MOBY D	XML application examples
Ethernet/IP	RFID 181EIP	RF200, RF300, RF600, MV400, MOBY D	Programming via implicit/explicit messages

System	Communication modules without file handler	Identification system	Available software
SIMATIC S7, PC, any other system, SIMOTION SCOUT	ASM 456	RF300	FC 56, FB 101/116/132
Ethernet/IP	RFID 181EIP	RF300	Programming via implicit/ explicit messages

Function

Corresponding software blocks (FB, FC, libraries, examples) ensure simple and quick integration into the application.

1 or 2 readers can be connected to a communication module (CM, ASM) with a maximum cable length of 1 000 m (depending on the CM, ASM, reader, etc.). Corresponding procedures guarantee a very high reliability of data transmission.

For the serial connection of SIMATIC RFID to any system (PC, PLC, etc.) the readers can be directly connected via an RS232 port.

Note regarding FC 45/55

The FC 45/55 can still be used in existing applications. For new applications, however, the FB 45/55 blocks or the Ident profile are recommended because only these blocks contain all functions.

Notes regarding software and licensing

No software or documentation is supplied when purchasing a communication module (CM) or reader, The DVD "RFID Systems Software & Documentation" contains all the FBs/FCs available for SIMATIC, C libraries for Windows XP/7 operating systems, demo programs, etc. and must be ordered separately. In addition, the DVD contains the complete RFID documentation in all available languages in PDF format.

The purchase of a CM or reader includes a payment for use of the software, including documentation, on the DVD "RFID Systems Software & Documentation". The purchaser acquires the right to make copies (copy license), insofar as they are required as part of the plant project.

The General License Conditions, included on the respective DVD, shall apply.

Integration

SIMATIC Ident Configuration Guide

Here is a compact configuration tool for setting up RFID systems:n:

http://support.automation.siemens.com/WW/view/en/67384964

[1)] The programming interface is described for connecting to any system.

© Siemens AG 2016

ASM 456, SIMATIC RF160C

Overview

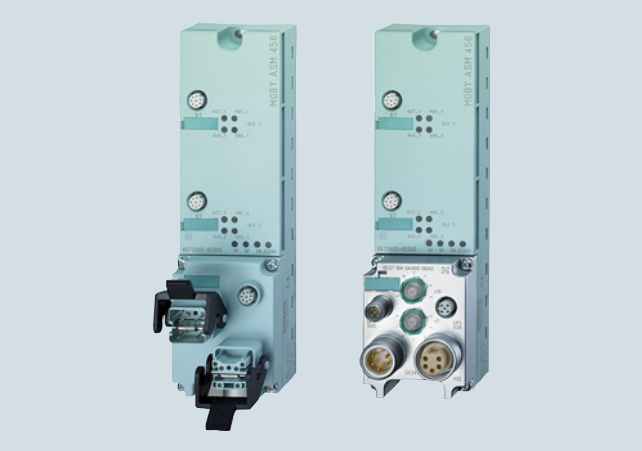

The low-cost communications modules ASM 456 and SIMATIC RF160C are stand-alone PROFIBUS DP slaves for the operation of MOBY D, SIMATIC RF200 / RF300 / RF600 RFID systems as well as the MV400 optical reader devices via PROFIBUS DP on:

- SIMATIC S7 (including FB/FC software)
- SINUMERIK
- PC, IPC, non-Siemens PLC
- SIMOTION (with integrated software library)

Thanks to their high degree of protection and ruggedness, they are particularly suitable for machine-level use. The modular structure with different PROFIBUS connection systems allows them to be used in all applications. The uniform plug-in connection system ensures rapid commissioning.

Benefits

get Designed for Industry

- Two parallel MOBY channels ensure real-time mode at dynamic read points.
- Modular design with different bus interfacing possibilities ensures universal implementation.
- Reader connection using an 8-pin M12 connector for quick mounting of all components.
- High-performance hardware ensures fast data exchange with the reader. Consequently, data is available for the application even faster.
- Simple firmware downloading via the TIA Portal in the case of function expansions and error rectification ensures high availability of the identification system.
- The parameterizable identification-system-specific PROFIBUS diagnostics facilitate start-up and troubleshooting.
- A wide selection of pre-assembled PROFIBUS connecting cables can be ordered for the communication modules. This saves time and money during installation and assures better quality.

Application

The ASM 456 and SIMATIC RF160C communication modules have been specifically designed for a wide range of applications in industrial automation and logistics. Thanks to the high IP67 degree of protection, the ASM 456 and RF160C can be installed in the process without a control cabinet.

Main application areas for ASM 456 and RF160C:

- Mechanical engineering, automation systems, conveyor systems
- Ancillary assembly lines in the automobile industry/suppliers
- Small assembly lines
- Production, packaging, textile, plastics and printing machines SIMOTION

Design

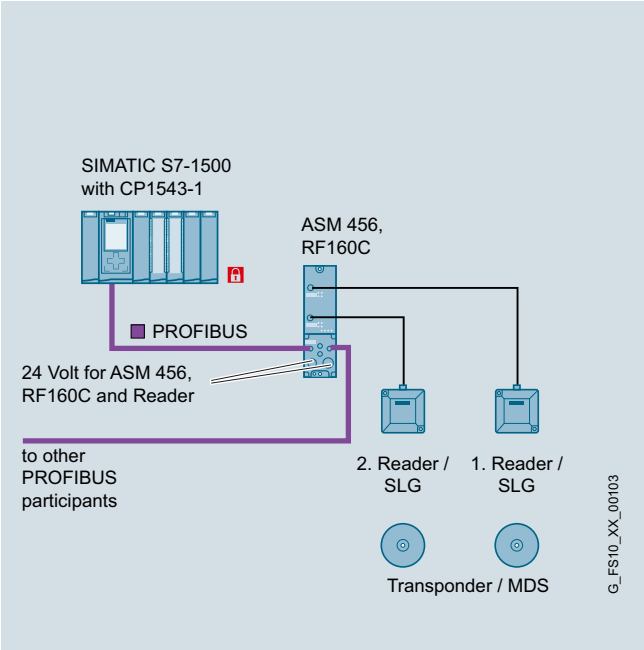

Configuration of ASM 456 and SIMATIC RF160C

5

© Siemens AG 2016

Function

The ASM 456 and the RF160C comprise a basic module and a connection block that must be ordered separately. When connecting PROFIBUS, the customer can choose between ECOFAST connections and M12, 7/8" connections.

A pre-assembled reader cable, available in lengths from 2 m to 50 m, is used to connect one or two readers/SLGs to the communication module. The cable can also be assembled by the customer as required.

The PROFIBUS DP procedure according to EN 50170 Vol. 2 PROFIBUS for communication between the communication module and SIMATIC S7 (or any PROFIBUS master) and the MOBY-specific procedures for communication between ASM and reader are implemented on the communication modules.

The data in the transponder can be accessed as follows:

- Direct addressing via absolute addresses
- Conveniently via the MOBY file handler (RF300 only) using file names (for ASM 456 only)

On the PROFIBUS DP, the communication module occupies a node address on the bus that is set on the connection block. The communication module is integrated into the hardware configuration by means of a device master (GSD) file. Then the communication module can be configured by means of the software tool HW_Config of the SIMATIC Manager or another PROFIBUS tool.

Error messages and operating states (transponder in the field, transmission active, etc.) are indicated additionally by means of LEDs and simplify commissioning and service.

ASM 456 and RF160C have two reader interfaces which also provide the readers with power. In the communication module, the power supply of the readers has an electronic fuse. If the reader requires more than 400 mA current (e.g. RF290R), only one reader can be operated on the communication module to avoid exceeding the maximum permissible current.

ASM 456

The ASM directly accesses the data in the transponder or the data matrix code via absolute addresses (FB/FC 45, FB/FC 55) or more conveniently using the MOBY file handler (FC 56) and file names. The communication module is operated in non-cyclic mode over PROFIBUS DP V1. Consequently, a very large amount of data can be transferred to/from the communication module without overloading the PROFIBUS cycle. This has advantages when transferring large volumes of data. In addition, the communication module can process concatenated transponder commands very quickly in this mode.

Function blocks FB 101/116/132 or the Ident Library in the SIMATIC S7 are available for the "RFID standard profile" mode. The Ident Library is integrated in the TIA Portal an doffers functions that are very easy to parameterize. The communication module is also integrated in SIMOTION by means of the "RFID standard profile" mode.

SIMATIC RF160C

The data in the transponder is accessed via absolute addresses. The FC 44 function block is available for SIMATIC S7 for this purpose. The RF160C is operated in cyclic mode over PROFIBUS DP-V0. This ensures a deterministic response in data communication in every case. Where there are large volumes of data, together with large-scale bus configurations, the data throughput should be tested with a tool which is provided on the DVD "RFID Systems, Software and Documentation". The programming interface to RF160C is extremely easy to use and can be programmed efficiently in any controller. The RF160C is therefore particularly suitable for use with non-Siemens controllers and older PROFIBUS masters.

Technical specifications

Article number	**6GT2002-0ED00**	**6GT2002-0EF00**
Product type designation	ASM 456 communication module	RF160C communication module
Suitability for operation	PROFIBUS network according to DP-V1 together with RF200/300/600, MV400, MOBY D/E/I/U	PROFIBUS network according to DP-V0 together with RF200/300/600, MOBY D/U
Transmission rate		
Transfer rate with PROFIBUS	9.6 kbit/s ... 12 Mbit/s	9.6 kbit/s ... 12 Mbit/s
Transfer rate at the point-to-point connection serial maximum	115.2 kbit/s	115.2 kbit/s
Interfaces		
Design of the interface for point-to-point connection	RS422	RS422
Number of readers connectable	2	2
Type of electrical connection		
• of the PROFIBUS interface	(according to the connection block)	(according to the connection block)
• for supply voltage	(according to the connection block)	(according to the connection block)
Design of the interface to the reader for communication	M12, 8-pin	M12, 8-pin
Mechanical data		
Material	Thermoplastic (Valox 467, fiberglass reinforced)	Thermoplastic (Valox 467, fiberglass reinforced)
Color	IP Basic 714	IP Basic 714
Tightening torque of the screw for securing the equipment maximum	3 Nm	3 Nm

© Siemens AG 2016

ASM 456, SIMATIC RF160C

Article number	**6GT2002-0ED00**	**6GT2002-0EF00**
Product type designation	ASM 456 communication module	RF160C communication module
Supply voltage, current consumption, power loss		
Supply voltage		
• at DC Rated value	24 V	24 V
• at DC	20 ... 30 V	20 ... 30 V
Consumed current at DC at 24 V		
• without connected devices typical	0.08 A	0.08 A
• with connected devices maximum	0.85 A	0.85 A
Permitted ambient conditions		
Ambient temperature		
• during operation	0 ... 55 °C	0 ... 55 °C
• during storage	-40 ... +70 °C	-40 ... +70 °C
• during transport	-40 ... +70 °C	-40 ... +70 °C
Protection class IP	IP67	IP67
Shock resistance	According to IEC 61131-2	According to IEC 61131-2
Shock acceleration	300 m/s²	300 m/s²
Vibrational acceleration	100 m/s²	100 m/s²
Design, dimensions and weight		
Width	60 mm	60 mm
Height	30 mm	30 mm
Depth	210 mm	210 mm
Net weight	0.21 kg	0.21 kg
Mounting type	2 x M5 screws	2 x M5 screws
Cable length for RS422 interface maximum	1 000 m	1 000 m
Product properties, functions, components general		
Display version	4 LEDs per reader connection, 4 LEDs for device status	4 LEDs per reader connection, 4 LEDs for device status
Product function transponder file handler can be addressed	Yes	No
Protocol is supported		
• PROFIBUS DP-V0 protocol	No	Yes
• PROFIBUS DP-V1 protocol	Yes	No
Type of parameterization	GSD	GSD
Type of programming	FB 45, FB 55, FC 56, Ident profile (PIB), (FC 45/55 with limited functionality)	FC 44
Type of computer-mediated communication	acyclic communication	Cyclic communication
Standards, specifications, approvals		
Certificate of suitability	CE, FCC, cULus	CE, FCC, cULus
MTBF	122 y	122 y
Accessories		
Accessories	Connection block for ECOFAST system or M12, 7/8"	Connection block for ECOFAST system or M12, 7/8"

© Siemens AG 2016

Selection and ordering data

	Article No.
ASM 456 communication module For connecting 2 readers to PROFIBUS DP-V1.	**6GT2002-0ED00**
RF160C communication module For connecting 2 readers to PROFIBUS DP-V0.	**6GT2002-0EF00**
Accessories ECOFAST connection	
ECOFAST connection block	**6ES7194-3AA00-0AA0**
	
PROFIBUS ECOFAST HYBRID plug 180	
• With male insert (5-pack)	**6GK1905-0CA00**
• With female insert (5-pack)	**6GK1905-0CB00**
PROFIBUS ECOFAST termination plug With terminating resistors.	**6GK1905-0DA10**
PROFIBUS ECOFAST hybrid cable - Cu Trailing-type cable (PUR casing) with two shielded copper cables for PROFIBUS DP and four copper cores of 1.5 mm^2 each.	
• **Sold by the meter** max. length 1 000 m; minimum order quantity 20 m.	**6XV1830-7AH10**
	
• **Prefabricated** with ECOFAST male and female connectors, fixed length:	
0.5 m	**6XV1830-7BH05**
1 m	**6XV1830-7BH10**
1.5 m	**6XV1830-7BH15**
3 m	**6XV1830-7BH30**
5 m	**6XV1830-7BH50**
10 m	**6XV1830-7BN10**
15 m	**6XV1830-7BN15**
20 m	**6XV1830-7BN20**
25 m	**6XV1830-7BN25**
30 m	**6XV1830-7BN30**
35 m	**6XV1830-7BN35**
40 m	**6XV1830-7BN40**
45 m	**6XV1830-7BN45**
50 m	**6XV1830-7BN50**

	Article No.
Accessories M12, 7/8" connection	
M12 connection block, 7/8"	**6ES7194-3AA00-0BA0**
	
M12 terminating resistor for PROFIBUS Pack with 5 units, minimum ordering quantity 1 pack.	**6GK1905-0EC00**
	
PROFIBUS M12 connecting cable Pre-assembled, with 5-pin M12 connector and socket, max. length 100 m.	
	
0.3 m	**6XV1830-3DE30**
0.5 m	**6XV1830-3DE50**
1 m	**6XV1830-3DH10**
1.5 m	**6XV1830-3DH15**
2 m	**6XV1830-3DH20**
3 m	**6XV1830-3DH30**
5 m	**6XV1830-3DH50**
10 m	**6XV1830-3DN10**
15 m	**6XV1830-3DN15**
7/8" plug-in cable Prefabricated, with 5-pin 7/8" connector and socket, max. length 50 m.	
	
0.3 m	**6XV1822-5BE30**
0.5 m	**6XV1822-5BE50**
1 m	**6XV1822-5BH10**
1.5 m	**6XV1822-5BH15**
2 m	**6XV1822-5BH20**
3 m	**6XV1822-5BH30**
5 m	**6XV1822-5BH50**
10 m	**6XV1822-5BN10**
15 m	**6XV1822-5BN15**
Other special lengths with 90° or 120° cable connection, see	

http://support.automation.siemens.com/WW/view/en/26999294

5

© Siemens AG 2016

	Article No.
PROFIBUS FC Standard Cable Standard type with special design for quick mounting, 2-core, shielded, sold by the meter; maximum ordering quantity unit 1 000 m, minimum ordering quantity 20 m.	**6XV1830-0EH10**
	
PROFIBUS M12 cable connector Pack with 5 units, minimum ordering quantity 1 pack.	
• With male insert	**6GK1905-0EA00**
• With female insert	**6GK1905-0EB00**
7/8" cable connector for voltage Pack with 5 units, minimum ordering quantity 1 pack.	
	
• With male insert	**6GK1905-0FA00**
• With female insert	**6GK1905-0FB00**
Sealing caps 7/8" For unused 24 V cable extension, pack of 10, minimum ordering quantity 1 pack.	**6ES7194-3JA00-0AA0**
	
Power line 5-core, 5 x 1.5 mm^2, trailing type; sold by the meter; maximum ordering quantity 1 000 m, minimum ordering quantity 20 m.	**6XV1830-8AH10**
	
General accessories	
Stainless steel screws for connection blocks Optional screws made of V4A steel for securing the connection blocks on the basic module. For use in wet areas. Pack with 40 units is sufficient for 10 connection blocks.	**6GT2090-0VB00**
	

	Article No.
RFID accessories	
MOBY D reader cable PUR material, CMG approval, suitable for cable carriers, 2 m.	**6GT2691-4FH20**
	
Reader cable for SIMATIC RF200 / RF300 / RF600 / MV440 Or extension cable MOBY D and SIMATIC RF200 / RF300 / RF600 / MV400, PUR material, CMG approval, suitable for cable carriers	
	
2 m, straight connector	**6GT2891-4FH20**
5 m, straight connector	**6GT2891-4FH50**
10 m, straight connector	**6GT2891-4FN10**
20 m, straight connector	**6GT2891-4FN20**
50 m, straight connector	**6GT2891-4FN50**
2 m, plug angled at reade	**6GT2891-4JH20**
5 m, plug angled at reade	**6GT2891-4JH50**
10 m, plug angled at reade	**6GT2891-4JN10**
Sealing caps M12 for unused reader connections Minimum ordering quantity 10 units.	**3RX9802-0AA00**
DVD "RFID Systems Software & Documentation"	**6GT2080-2AA20**

Dimensional drawings

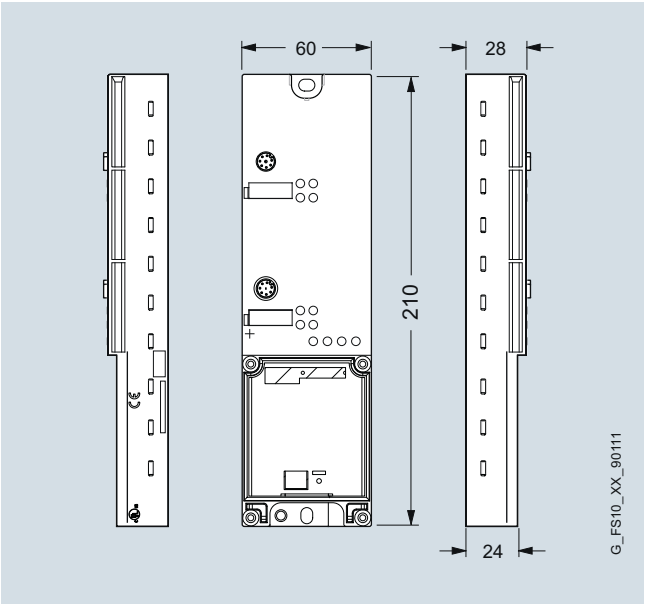

ASM 456 and SIMATIC RF160C communication modules

© Siemens AG 2016

Overview



6GT2002-0JD00

6GT2002-0JD10

6GT2002-0JD20

SIMATIC RF180C/RF182C and RFID 181EIP are communication modules for direct connection of SIMATIC identification systems to PROFINET IO/Ethernet and Ethernet/IP. The readers (SLG) of the RFID systems MOBY D, SIMATIC RF200 / RF300 / RF600 as well as the MV400 optical reader devices (RF180C and RFID 181EIP only) can be operated on the communication modules.

Due to the high degree of protection and ruggedness, SIMATIC RF180C / RF182C and RFID 181EIP are particularly suitable for machine level use. The uniform plug-in connection system ensures rapid commissioning.

Benefits

get Designed for Industry

- Two parallel reader channels ensure real-time mode at dynamic read points.
- Reader connection using an 8-pin M12 connector for fast installation of all components.
- Different connection systems to suit any application:
  - M12, 7/8", the well-proven round connectors.
  - Push-pull connectors for quick assembly with RJ45 data connectors and 24 V connectors.
- Easy changeover from PROFIBUS applications to PROFINET with SIMATIC RF180C thanks to software compatibility.
- The integrated switch allows several PROFINET/Ethernet modules to be installed in a star or bus topology. Each application can then be set up quickly and inexpensively.
- Powerful hardware ensures rapid data communication with the reader (SLG). Consequently, data is available for the application even faster.
- Simple firmware downloading in the case of function expansions and error rectification ensures high availability of the identification system.
- Adjustable and parameterizable identification-system-specific diagnostics facilitate easy commissioning and troubleshooting.
- A broad selection of pre-assembled connecting cables can be ordered for connecting PROFINET/Ethernet and readers to SIMATIC RF180C/RF182C. This saves time and money during installation and assures better quality.

Application

The Ethernet-based communication modules have been specially designed for a wide range of applications in industrial automation and logistics. Due to their high IP67 degree of protection, SIMATIC RF180C/RF182C and RFID 181EIP can be installed in the process outside the control cabinet.

Main applications for SIMATIC RF180C/RF182C and RFID 181EIP:

- Mechanical engineering, automation systems, conveyor systems
- Ancillary assembly lines in the automotive industry / suppliers
- Small assembly lines

© Siemens AG 2016

Design

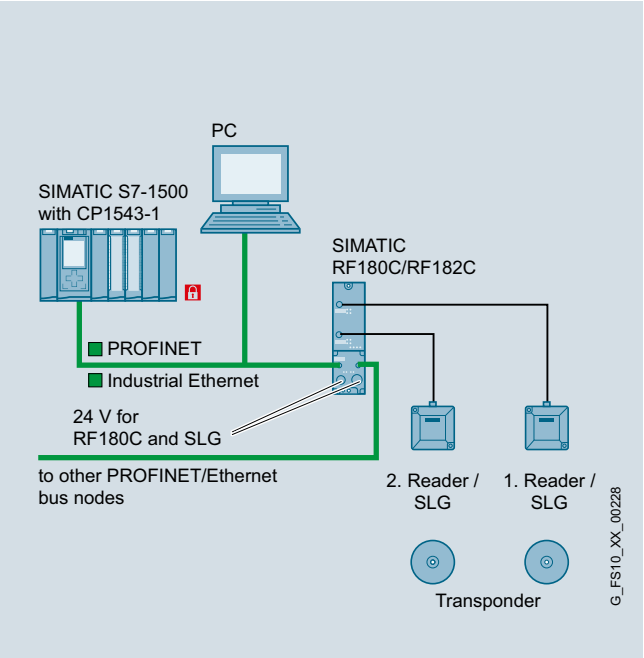

Function

The SIMATIC RF180C/RF182C and RFID 181EIP communication modules consist of a basic module and a connection block that must be ordered separately.

The connection block is available in three versions:

- M12, 7/8" (5-pole):
  PROFINET/Ethernet is connected by means of an M12 connector, the power supply is connected by means of a 5-pole 7/8" connector. There are 2 connections each for PROFINET/Ethernet as well as for the power supply. This ensures that the SIMATIC RF180C/RF182C can be connected to additional bus nodes without the need for external distributors. The removable connection block allows a base module to be replaced without interrupting the supply voltage to other bus stations.
- Push-pull connector (according to IEC 61918):
  PROFINET/Ethernet and the power supply are connected by means of a push-pull connector. There are 2 connections each for PROFINET/Ethernet as well as for the power supply. This ensures that SIMATIC RF180C/RF182C can be connected to additional bus nodes without the need for external distributors. The supply voltage connectors can conduct currents of up to 12 A (1L+ and 2L+). The removable connection block allows a base module to be replaced without interrupting the supply voltage to other bus stations.
- M12, 7/8" (4-pole; not recommended for RF180C):
  Ethernet is connected by means of an M12 connector, the power supply is connected by means of a 4-pole 7/8" connector. There are 2 connections for Ethernet and one connection is available for the power supply. This connection block can be used in applications where the 5-pole 7/8" connector is already being used for other functions and therefore cannot be used for the power supply.

A pre-assembled reader cable, available in lengths from 2 m to 50 m, is used to connect one or two readers to the communication module. The cable can also be assembled by the customer as required.

The data in the transponder can in principle be accessed by direct addressing using absolute addresses.

Error messages and operating states (transponder in the field, transmission, etc.) are indicated additionally by means of LEDs and simplify commissioning and service.

The SIMATIC RF180C/RF182C and RFID 181EIP communication modules have two reader interfaces from which the readers are also supplied with voltage. In the communication module, the power supply of the readers has an electronic fuse. The maximum permissible current per communication module for the readers is 1 A. It is of no importance here whether the current is drawn by 1 or 2 readers.

SIMATIC RF180C

The SIMATIC RF180C is designed for use in PROFINET networks. SIMATIC RF180C is integrated in SIMATIC STEP 7 via the GSDML file. The SIMATIC RF180C can then be configured using the device manager of the TIA Portal or another PROFINET tool.

The application accesses the transponder via the FB 45 or via blocks from the Ident Library. The transponder is addressed using absolute addresses. For large volumes of data and complex tag operations, the FB 45 can process chained commands. The Ident Library is already integrated in the TIA Portal an doffers functions that are very easy to parameterize.

Data is exchanged between SIMATIC RF180C and the application by means of acyclic data records. This ensures that large quantities of data can be transferred from/to SIMATIC RF180C without loading the bus cycle.

Using the "RFID standard profile" setting, the RF180C can be operated directly in a SIMOTION.

SIMATIC RF182C

The SIMATIC RF182C is designed for use in Ethernet networks based on TCP/IP. The IP address of the SIMATIC RF182C is set using the "Primary Setup Tool". The RF182C is then ready for operation. This tool can be downloaded from

http://support.automation.siemens.com/WW/view/en/19440762

Communication with the SIMATIC RF182C is implemented using XML commands. XML commands have a very simple structure. This makes programming of the RF182C under any operating system very easy. The simple command command set of the RF182C can also be programmed easily in any Ethernet-capable controller.

RFID 181EIP

The communication module RFID 181EIP is designed for use in Ethernet/IP networks. A DHCP server automatically assigns an IP address to the RFID 181EIP. Alternatively, the user can assign issue static IP addresses on the DHCP server. The standard tool for assigning IP addresses is called the BOOTP/DHCP server and is included in the RSLinx software package.

The RFID 181EIP communicates with the reader by means of implicit and explicit messages. Commands and results are transferred with explicit messages. The user sets up the commands directly in the application program. Application examples are available to make getting started easier.

© Siemens AG 2016

Technical specifications

Article number	6GT2002-0JD00	6GT2002-0JD10	6GT2002-0JD20
Product type designation	RF180C communication module	RF182C communication module	RFID 181EIP communication module
Suitability for operation	PROFINET network together with RF200/300/600, MV400, MOBY D/E/I/U	Industrial Ethernet network together with RF200/300/600, MOBY D/U	Ethernet/IP network together with RF200/300/600, MV400, MOBY D/E/I/U
Transmission rate			
Transfer rate for Industrial Ethernet	10 ... 100 Mbit/s	10 ... 100 Mbit/s	10 ... 100 Mbit/s
Transfer rate at the point-to-point connection serial maximum	115.2 kbit/s	115.2 kbit/s	115.2 kbit/s
Interfaces			
Design of the interface for point-to-point connection	RS422	RS422	RS422
Number of readers connectable	2	2	2
Type of electrical connection			
• of Industrial Ethernet interface	(according to the connection block)	(according to the connection block)	(according to the connection block)
• for supply voltage	(according to the connection block)	(according to the connection block)	(according to the connection block)
Design of the interface to the reader for communication	M12, 8-pin	M12, 8-pin	M12, 8-pin
Mechanical data			
Material	Thermoplastic (Valox 467, fiberglass reinforced)	Thermoplastic (Valox 467, fiberglass reinforced)	Thermoplastic (Valox 467, fiberglass reinforced)
Color	IP Basic 714	IP Basic 714	IP Basic 714
Tightening torque of the screw for securing the equipment maximum	3 Nm	3 Nm	3 Nm
Supply voltage, current consumption, power loss			
Supply voltage			
• at DC Rated value	24 V	24 V	24 V
• at DC	20 ... 30 V	20 ... 30 V	20 ... 30 V
Consumed current at DC at 24 V			
• without connected devices typical	0.1 A	0.1 A	0.1 A
• with connected devices maximum	1.1 A	1.1 A	1.1 A
Permitted ambient conditions			
Ambient temperature			
• during operation	0 ... 60 °C	0 ... 60 °C	0 ... 60 °C
• during storage	-40 ... +70 °C	-40 ... +70 °C	-40 ... +70 °C
• during transport	-40 ... +70 °C	-40 ... +70 °C	-40 ... +70 °C
Protection class IP	IP67	IP67	IP67
Shock resistance	According to IEC 61131-2	According to IEC 61131-2	According to IEC 61131-2
Shock acceleration	300 m/s^2	300 m/s^2	300 m/s^2
Vibrational acceleration	100 m/s^2	100 m/s^2	100 m/s^2
Design, dimensions and weight			
Width	60 mm	60 mm	60 mm
Height	30 mm	30 mm	30 mm
Depth	210 mm	210 mm	210 mm
Net weight	0.21 kg	0.21 kg	0.21 kg
Mounting type	2 x M5 screws	2 x M5 screws	2 x M5 screws
Cable length for RS422 interface maximum	1 000 m	1 000 m	1 000 m

© Siemens AG 2016

SIMATIC RF180C / RF182C / RFID 181EIP

Article number	6GT2002-0JD00	6GT2002-0JD10	6GT2002-0JD20
Product type designation	RF180C communication module	RF182C communication module	RFID 181EIP communication module
Product properties, functions, components general			
Display version	4 LEDs per reader connection, 4 LEDs for device status	4 LEDs per reader connection, 4 LEDs for device status	4 LEDs per reader connection, 4 LEDs for device status
Protocol is supported Media Redundancy Protocol (MRP)	No	No	No
Product function transponder file handler can be addressed	Yes	No	Yes
Protocol is supported			
• LLDP	Yes	No	No
• PROFINET IO protocol	Yes	No	No
• TCP/IP	No	Yes	No
• EtherNet/IP protocol	No	No	Yes
Type of parameterization	GSDML	XML	EDS file
Type of programming	FB 45, FB 55, Ident profile (PIB)	XML commands	Data records via implicit/explicit messages
Type of computer-mediated communication	acyclic communication	XML	Implicit/explicit messaging
Standards, specifications, approvals			
Certificate of suitability	CE, FCC, cULus, PNO: Conformance Class B	CE, FCC, cULus	CE, FCC, cULus
MTBF	121 y	121 y	121 y
Accessories			
Accessories	Connection block M12 d-coded, 7/8" 5-pin or push-pull	Connection block M12 d-coded, 7/8" 5-pin or push-pull or M12 d-coded, 7/8" 4-pin	Connection block M12 d-coded, 7/8" 5-pin or push-pull or M12 d-coded, 7/8" 4-pin

© Siemens AG 2016

Selection and ordering data

	Article No.
SIMATIC RF180C communication module For PROFINET, for connecting 2 readers, without a connection block.	**6GT2002-0JD00**
SIMATIC RF182C communication module For Ethernet, for connecting 2 readers, without a connection block.	**6GT2002-0JD10**
RFID 181EIP communication module For Ethernet/IP, for connecting 2 readers, without a connection block.	**6GT2002-0JD20**
Connection block For SIMATIC RF180C/RF182C, M12 d-coded, 7/8" (5-pole). 	**6GT2002-1JD00**
Connection block For SIMATIC RF180C/RF182C, push-pull RJ45. 	**6GT2002-2JD00**
Connection block For SIMATIC RF182C, RFID 181EIP, M12 d-coded, 7/8" (4-pole). 	**6GT2002-4JD00**

	Article No.
Accessories for network connection M12, 7/8" (5-pole)	
IE connecting cable M12-180/M12-180 Pre-assembled IE FC TP trailing cable GP 2x2 (PROFINET Type C), with two 4-pin M12 plugs (D-coded), maximum length 85 m, IP65/IP67 degree of protection. 	
0.3 m	**6XV1870-8AE30**
0.5 m	**6XV1870-8AE50**
1 m	**6XV1870-8AH10**
1.5 m	**6XV1870-8AH15**
2 m	**6XV1870-8AH20**
3 m	**6XV1870-8AH30**
5 m	**6XV1870-8AH50**
10 m	**6XV1870-8AN10**
15 m	**6XV1870-8AN15**
7/8" connecting cable to power supply Pre-assembled with two 5-pin 7/8" male and female connectors. 	
0.3 m	**6XV1822-5BE30**
0.5 m	**6XV1822-5BE50**
1 m	**6XV1822-5BH10**
1.5 m	**6XV1822-5BH15**
2 m	**6XV1822-5BH20**
3 m	**6XV1822-5BH30**
5 m	**6XV1822-5BH50**
10 m	**6XV1822-5BN10**
15 m	**6XV1822-5BN15**
Other special lengths with 90° or 120° cable connection, see	

http://support.automation.siemens.com/WW/view/en/26999294

5

© Siemens AG 2016

	Article No.
PROFINET M12 plug-in connectors Rugged metal housing; axial cable outlet; D-coded. 	**6GK1901-0DB20-6AA0**
7/8" cable connector, for voltage Pack with 5 units, minimum ordering quantity 1 pack. 	
• With male insert	**6GK1905-0FA00**
• With female insert	**6GK1905-0FB00**
IE M12 control cabinet bushing For conversion from M12 (D-coded) to RJ45, pack with 5 units, minimum ordering quantity 1 pack. 	**6GK1901-0DM20-2AA5**
IE Connecting Cable M12-180/ IE FC RJ45 Plug 145 Prefabricated IE FC TP trailing cable GP 2 x 2 (PROFINET type C) with M12 plug (D-coded) and IE FC RJ45 plug, IP65/IP67 degree of protection. 	
2 m	**6XV1871-5TH20**
3 m	**6XV1871-5TH30**
5 m	**6XV1871-5TH50**
10 m	**6XV1871-5TN10**
15 m	**6XV1871-5TN15**
IE FC RJ45 PLUG 180 RJ45 plug With rugged metal housing and FC connection system, straight cable outlet. 	**6GK1901-1BB10-2AA0**
Sealing caps 7/8" Pack with 10 units, minimum ordering quantity 1 pack. 	**6ES7194-3JA00-0AA0**

	Article No.
Accessories for push-pull RJ45 network connection	
Push-pull cable connector for 1L+/2L+ Unassembled.	**6GK1907-0AB10-6AA0**
Push-pull cable connector for RJ45 Unassembled.	**6GK1901-1BB10-6AA0**
Cover caps for push-pull female connectors (1L+/ 2L+), pack of 5.	**6ES7194-4JA50-0AA0**
Cover caps for push-pull female connectors RJ45, pack of 5.	**6ES7194-4JD50-0AA0**
Accessories for network connection M12, 7/8" (4-pole)	
Network wiring with M12	Accessories, as for M12, 7/8" (5-pole)
Power supply with 7/8" (4-pole)	No cables and connectors from Siemens
Accessories for PROFINET bus components	
SCALANCE XB205-3 Industrial Ethernet Switch With five 10/100 Mbps RJ45 ports and three fiber-optic cable ports (MM FO SC). Description see page 5/28. 	**6GK5205-3BD00-2AB2**
SCALANCE X204IRT PRO Industrial Ethernet switch with four 10/100 Mbps RJ45 push-pull ports. Description see page 5/27. 	**6GK5204-0JA00-2BA6**
IE FC TP standard cable GP 2x2 4-core, shielded TP installation cable for connection to IE, FC outlet RJ45/IE FC RJ45 plug, PROFINET-compatible, with UL approval, sold by the meter, max. delivery unit 1 000 m, minimum ordering quantity 20 m 	**6XV1840-2AH10**

© Siemens AG 2016

	Article No.
Power line 5-core, 5 x 1.5 mm^2, trailing type, sold by the meter, minimum ordering quantity 20 m, maximum ordering quantity 1 000 m. 	**6XV1830-8AH10**
General accessories	
Stainless steel screws for connection blocks Optional screws made of V4A steel for securing the connection blocks on the basic module. For use in wet areas. Pack with 40 units is sufficient for 10 connection blocks. 	**6GT2090-0VB00**
RFID accessories	
MOBY D reader cable PUR material, CMG approval, suitable for cable carriers, 2 m. 	**6GT2691-4FH20**
Reader cable for SIMATIC RF200 / RF300 / RF600 / MV440 Or extension cable MOBY D and SIMATIC RF200 / RF300 / RF600 / MV400, PUR material, CMG approved, suitable for cable carriers 	
2 m, straight connector	**6GT2891-4FH20**
5 m, straight connector	**6GT2891-4FH50**
10 m, straight connector	**6GT2891-4FN10**
20 m, straight connectore	**6GT2891-4FN20**
50 m, straight connector	**6GT2891-4FN50**
2 m, plug angled at reader	**6GT2891-4JH20**
5 m, plug angled at reader	**6GT2891-4JH50**
10 m, plug angled at reader	**6GT2891-4JN10**
Sealing caps M12 for unused reader connections Minimum ordering quantity 10 units.	**3RX9802-0AA00**
DVD „RFID Systems Software & Documentation“	**6GT2080-2AA20**

Dimensional drawings

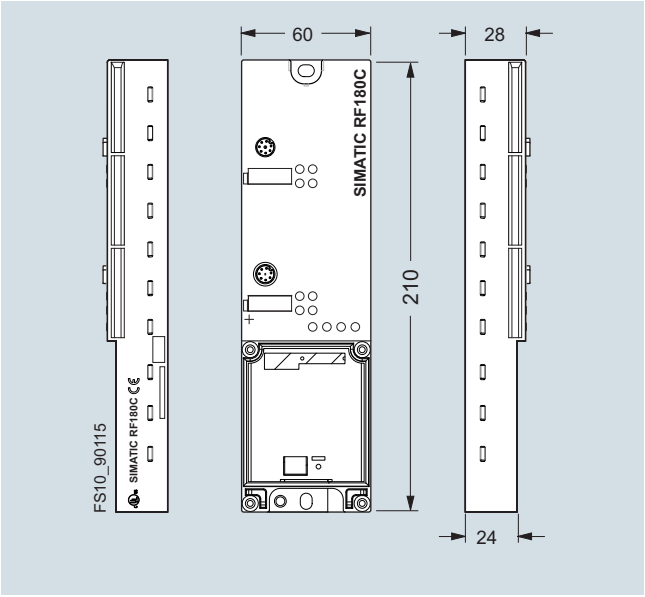

SIMATIC RF180C, RF182C, RFID 181EIP communication module

5

© Siemens AG 2016

Overview

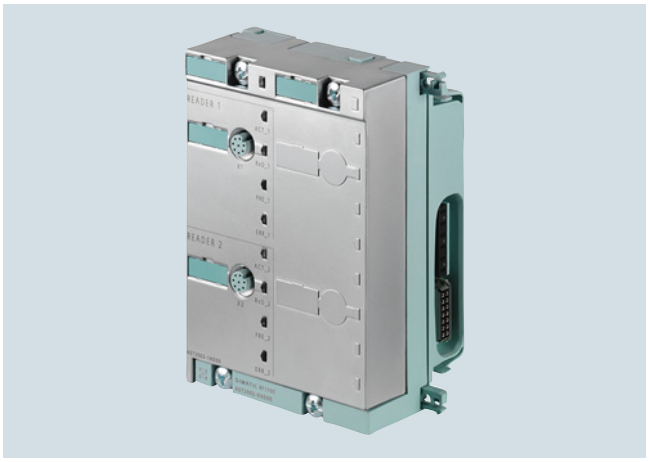

ET 200pro

The SIMATIC RF170C is a communication module for connecting the SIMATIC identification systems to the ET 200pro distributed I/O system. The readers (SLGs) of all RFID systems as well as the MV400 code-reading systems can be operated on the SIMATIC RF170C.

Thanks to the high degree of protection and ruggedness, ET 200pro is particularly suitable for machine-level use. The modular structure with PROFIBUS and PROFINET connection systems allows them to be used in all applications. The uniform plug-in connection system ensures rapid commissioning.

Benefits

get Designed for Industry

- Two parallel reader channels ensure real-time mode at dynamic read points.
- Through selection of the corresponding head module, a connection of the RFID systems via PROFIBUS or PROFINET is possible.
- The modular design with interface modules for PROFIBUS and PROFINET supports universal implementation.
- Reader connection using an 8-pin M12 connector for quick mounting of all components.
- Powerful hardware guarantees rapid data exchange with the reader (SLG) so that data is made available to the application even faster.
- Very easy downloading of firmware via the SIMATIC Manager for function expansions and error rectification ensure high availability of the identification system.
- Adjustable and parameterizable identification-system-specific diagnostics facilitate easy commissioning and troubleshooting.
- A wide selection of pre-assembled connecting cables can be ordered for ET 200pro and SIMATIC RF170C. This saves time and money during installation and assures better quality.

Application

The ET 200pro distributed I/O system with the SIMATIC RF170C communication module has been specially designed for a wide range of applications in industrial automation and logistics. Thanks to the high degree of protection of IP67, the SIMATIC RF170C can be installed without a control cabinet.

Used primarily for the SIMATIC RF170C:

- Mechanical engineering, automation systems, conveyor systems
- Ancillary assembly lines in the automobile industry/suppliers
- Small assembly lines

Design

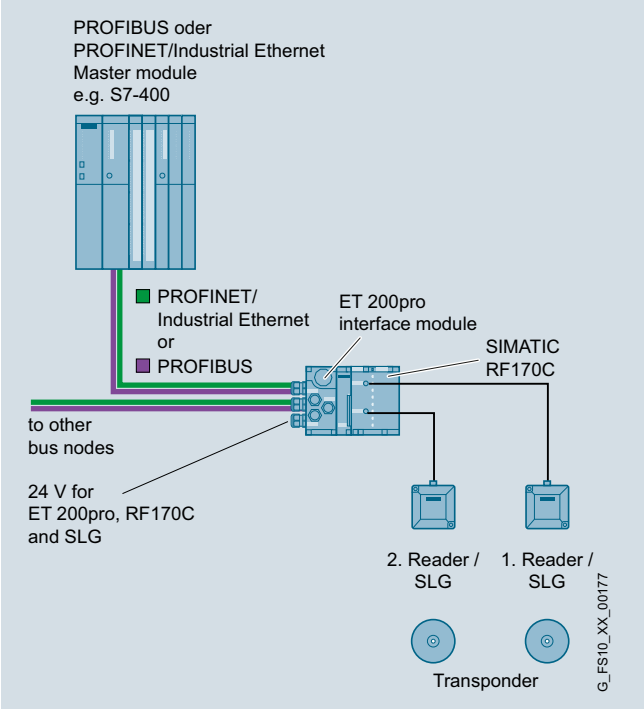

SIMATIC RF170C communications module

5

© Siemens AG 2016

Function

The SIMATIC RF170C comprises an electronics module and a connection block that must be ordered separately. The interface module is available in PROFIBUS or PROFINET version.

- For the PROFIBUS connection, you can choose between ECOFAST, M12, 7/8" or screwed cable gland for the connection system.
- For the PROFINET interface module, the M12, 7/8" or push pull (RJ45 or SCRJ FO) connection system is available.

Integration of SIMATIC RF170C into SIMATIC STEP 7 is already implemented in the TIA Portal but can also be accomplished by means of a Hardware Support Package (HSP). The GSD file of the ET 200pro system is available for integration into non-Siemens systems.

A pre-assembled reader cable, available in lengths from 2 m to 50 m, is used to connect one or two readers to the communication module. The cable can also be assembled by the customer as required.

The data in the transponder is accessed by direct addressing using absolute addresses.

Error messages and operating states (transponder in the field, transmission, etc.) are indicated additionally by means of LEDs and simplify commissioning and service.

The SIMATIC RF170C has two reader interfaces from which the readers are also supplied with power. In the SIMATIC RF170C, the power supply for the readers has an electronic fuse. The maximum permissible current per SIMATIC RF170C for the readers is 0.8 A. It is of no importance here whether the current is drawn by one or two readers.

The data in the transponder or on the data matrix code can be accessed direct using absolute addresses (FB/FC 45, FB/FC 55). When the ET 200pro is operated with a PROFINET interface, use of the FB (FB 45, FB 55) is mandatory. The RF170C also supports the functions of the Ident Library. The Ident Library is already integrated in the TIA Portal an doffers functions that are very easy to parameterize.

Communication between the SIMATIC RF170C and the controller is acyclic. Consequently, a very large amount of data can be transferred to/from the SIMATIC RF170C without overloading the bus cycle. This has advantages when transferring large volumes of data. The SIMATIC RF170C can also process concatenated transponder commands very quickly in this mode.

Notice: When connecting high-speed RFID systems (e.g. RF300), the data throughput can decrease due to the distributed configuration of the ET 200pro. Therefore use the data throughput calculation tool when configuring. You can find the tool on the DVD with article number 6GT2080-2AA20.

Technical specifications

Article number	**6GT2002-0HD00**
Product type designation	RF170C communication module
Suitability for operation	Distributed IO ET 200pro together with RF200/300/600, MV300/400, MOBY D/E/I/U and RS232 devices
Transmission rate	
Transfer rate at the point-to-point connection serial maximum	115.2 kbit/s
Interfaces	
Design of the interface for point-to-point connection	RS422/RS232 via connection block
Number of readers connectable	2
Type of electrical connection	
• of the backplane bus	ET 200pro backplane bus
• of the PROFIBUS interface	(according to the head module)
• of Industrial Ethernet interface	(according to the head module)
• for supply voltage	ET 200pro backplane bus
Design of the interface to the reader for communication	Internal plug to the connection block
Mechanical data	
Material	Thermoplastic (Valox 467, fiberglass reinforced)
Color	IP Basic 714
Tightening torque of the screw for securing the equipment maximum	1.5 Nm
Supply voltage, current consumption, power loss	
Supply voltage	
• at DC Rated value	24 V
• at DC	20 ... 30 V
Consumed current at DC at 24 V	
• without connected devices typical	0.13 A
• with connected devices maximum	1 A
Permitted ambient conditions	
Ambient temperature	
• during operation	-25 ... +55 °C
• during storage	-40 ... +70 °C
• during transport	-40 ... +70 °C
Protection class IP	IP67
Shock resistance	According to IEC 61131-2
Shock acceleration	300 m/s^2
Vibrational acceleration	100 m/s^2
Design, dimensions and weight	
Width	90 mm
Height	130 mm
Depth	35 mm
Net weight	0.27 kg
Mounting type	ET 200pro rack
Cable length for RS422 interface maximum	1 000 m

© Siemens AG 2016

SIMATIC RF170C

Article number	**6GT2002-0HD00**
Product type designation	RF170C communication module
Product properties, functions, components general	
Display version	(see connection block)
Product function transponder file handler can be addressed	No
Protocol is supported	
• S7 communication	Yes
Type of parameterization	HSP
Type of programming	FB 45, FB 55, ident profile, (FC 45/55 with limited functionality)
Type of computer-mediated communication	acyclic communication
Standards, specifications, approvals	
Certificate of suitability	CE, FCC, cULus
MTBF	77 y
Accessories	
Accessories	Connection block for RF170C

Selection and ordering data

	Article No.
SIMATIC RF170C communication module For connecting to the distributed I/O system ET 200pro	**6GT2002-0HD00**
Accessories	
Connection block for SIMATIC RF170C For connecting 2 readers via an M12 connector	**6GT2002-1HD00**
	
Reader cable for SIMATIC RF200 / RF300 / RF600 / MV440 Or extension cable MOBY D and SIMATIC RF200 / RF300 / RF600 / MV400, PUR material, CMG approved, suitable for cable carriers	
	
2 m, straight connector	**6GT2891-4FH20**
5 m, straight connector	**6GT2891-4FH50**
10 m, straight connector	**6GT2891-4FN10**
20 m, straight connector	**6GT2891-4FN20**
50 m, straight connector	**6GT2891-4FN50**
2 m, plug angled at reader	**6GT2891-4JH20**
5 m, plug angled at reader	**6GT2891-4JH50**
10 m, plug angled at reader	**6GT2891-4JN10**

	Article No.
MOBY D reader cable PUR material, CMG approval, suitable for cable carriers, 2 m	**6GT2691-4FH20**
	
Sealing caps M12 for unused reader connections Minimum order quantity 10 units, price per 100 units	**3RX9802-0AA00**
DVD „RFID Systems Software & Documentation“	**6GT2080-2AA20**

Dimensional drawings

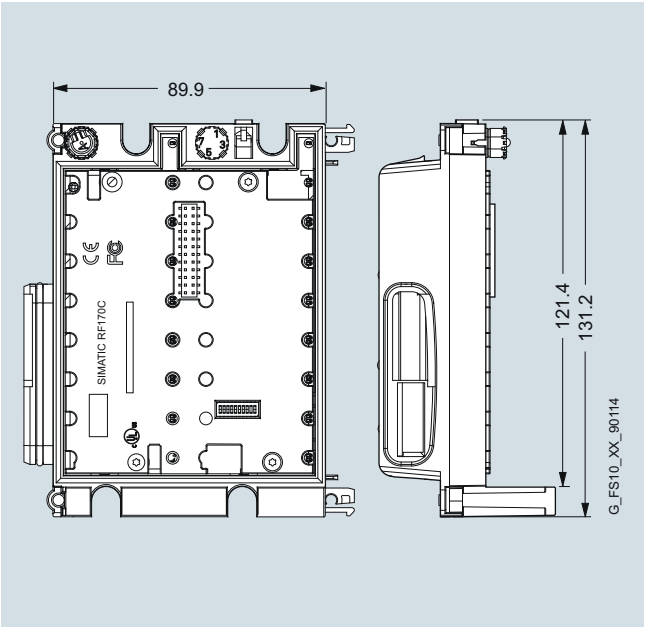

SIMATIC RF170C communications module

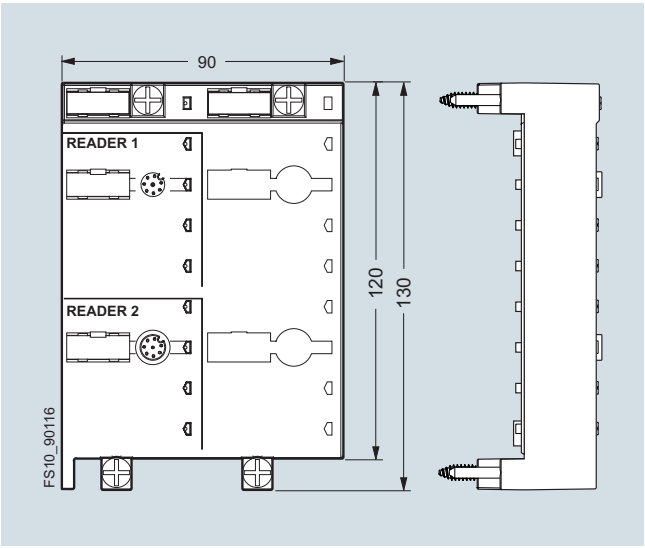

Connector block for SIMATIC RF170C

© Siemens AG 2016

Overview



The SIMATIC RF120C is a communication module for connecting the SIMATIC identification systems directly to the SIMATIC S7-1200. The readers of all RFID systems as well as the MV400 optical readers can be operated on the SIMATIC RF120C.

Integration into the TIA Portal and the uniform plug-in connection systems permit fast and simple commissioning.

Benefits

get Designed for Industry

- Space savings thanks to the extremely compact design of the identification system connected directly to the controller
- Due to the intuitive parameterization of the RF120C and the reader via the SIMATIC device configuration, the manual is mostly no longer required.
- The Ident Library is integrated in the TIA Portal and offers Ident instructions (e.g. Read, Write) that are very easy to use and thus facilitate programming and commissioning without the need for documentation.
- Reader connection using a sub-D connector on the RF120C for fast installation of all components
- Powerful hardware ensures maximum data exchange speed with the reader so that data is made available to the application even faster.
- Very easy downloading of functional expansion and error rectification firmware for RF120C and readers via the TIA Portal ensures high availability of the identification system

Application

The SIMATIC S7-1200 controller with the RF120C communication module has been developed for all simple control applications including identification tasks.

Due to its technical setup with IP 20 degree of protection, the S7-1200 is designed for use in the control cabinet.

Main applications for SIMATIC RF120C:

- Mechanical engineering, automation systems, conveyor systems
- Ancillary assembly lines in the automobile industry/suppliers
- Small assembly lines

Design

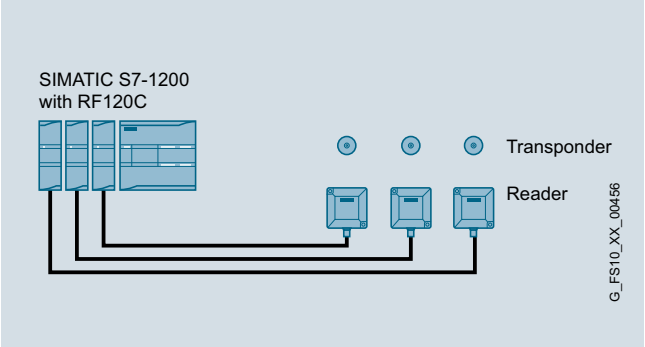

SIMATIC RF120C communication module

Function

The SIMATIC RF120C communications module is positioned to the left of the S7-1200 CPU. It enables a maximum of three RF120Cs to be operated on one S7-1200 CPU.

The reader is powered from the RF120C. The RF120C is provided with voltage via a screw-type terminal connector which is included in the scope of delivery.

For programming in the controller, a library is available with simple instructions such as Read/Write for accessing the transponder data. These instructions can also be used for other identification communication modules that are connected to the S7-1200 via Profibus/Profinet, e.g. for ASM 456 and RF180C. Furthermore, the library blocks can also be used for the SIMATIC S7-1500 so that the identification communication modules can be operated there via Profibus/Profinet.

Error messages and operating states (transponder in the field, transmission, etc.) are indicated additionally by means of LEDs behind the top cover of the RF120C. This makes commissioning and servicing considerably easier.

The RF120C features a sub D socket for connecting the reader. This also supplies the reader with voltage. The power supply of the reader is equipped with an electronic fuse. The maximum permissible current for a reader is 1 A.

The reader is connected to the RF120C with a pre-assembled reader cable which is available in different lengths. This 6GT2091-4Lxxx type cable can easily be extended with a type 6GT2891-4Fxxx cable in order to cover greater distances between the reader and the controller.

Communication between the SIMATIC RF120C and the controller is acyclic. Consequently, a very large amount of data can be transferred to/from the RF120C without overloading the bus cycle. This has advantages when transferring large volumes of data.

© Siemens AG 2016

Technical specifications

Article number	**6GT2002-0LA00**
Product type designation	RF120C communication module
Suitability for operation	SIMATIC S7-1200 together with RF200/300/600, MV400, MOBY D/U
Transmission rate	
Transfer rate at the point-to-point connection serial maximum	115.2 kbit/s
Interfaces	
Design of the interface for point-to-point connection	RS422
Number of readers connectable	1
Type of electrical connection	
• of the backplane bus	S7-1200 backplane bus
• for supply voltage	Screw terminals
Design of the interface to the reader for communication	D-sub, 9-pin, socket
Mechanical data	
Material	Xantar MX 1094
Color	Ti-grey 24L01
Tightening torque of the screw for securing the equipment maximum	0.45 Nm
Supply voltage, current consumption, power loss	
Supply voltage	
• at DC Rated value	24 V
• at DC	20 ... 30 V
Consumed current at DC at 24 V	
• without connected devices typical	0.03 A
• with connected devices maximum	1 A
Permitted ambient conditions	
Ambient temperature	
• during operation	0 ... 55 °C
• during storage	-40 ... +70 °C
• during transport	-40 ... +70 °C
Protection class IP	IP20
Shock resistance	According to IEC 61131-2
Shock acceleration	300 m/s²
Vibrational acceleration	100 m/s²
Design, dimensions and weight	
Width	30 mm
Height	100 mm
Depth	75 mm
Net weight	0.15 kg
Mounting type	S7-1200 rack
Cable length for RS422 interface maximum	1 000 m
Product properties, functions, components general	
Display version	4 LEDs for reader connection, 1 LED for device status
Product function transponder file handler can be addressed	No
Protocol is supported	
• S7 communication	Yes
Type of parameterization	HSP
Type of programming	Library with functions
Type of computer-mediated communication	acyclic communication
Standards, specifications, approvals	
Certificate of suitability	CE, FCC, cULus, KCC, C-Tick, FM, Ex: II 3G Ex nAA IIC T4 Gc
MTBF	196 y

Selection and ordering data

	Article No.
SIMATIC RF120C communication module Integrated in the S7-1200 controller for connection of a reader	**6GT2002-0LA00**
Accessories for all readers	
Reader cable for SIMATIC RF200 / RF300 / RF600 / MV400 PUR material, CMG approval, suitable for cable carriers, straight reader connector	
	
2 m	**6GT2091-4LH20**
5 m	**6GT2091-4LH50**
10 m	**6GT2091-4LN10**
Accessories for extended us	
Extension cable for all readers PUR material, CMG approval, suitable for cable carriers	
	
2 m, straight connector	**6GT2891-4FH20**
5 m, straight connector	**6GT2891-4FH50**
10 m, straight connector	**6GT2891-4FN10**
20 m, straight connector	**6GT2891-4FN20**
50 m, straight connector	**6GT2891-4FN50**
2 m, plug angled at reader	**6GT2891-4JH20**
5 m, plug angled at reader	**6GT2891-4JH50**
10 m, plug angled at reader	**6GT2891-4JN10**
Reader adapter cable for MOBY D Material PUR, CMG approval, suitable for cable carriers, 2 m. A cable of the type 6GT2091-4L... is also required.	**6GT2691-4FH20**
	
DVD „RFID Systems Software & Documentation“	**6GT2080-2AA20**

© Siemens AG 2016

Dimensional drawings

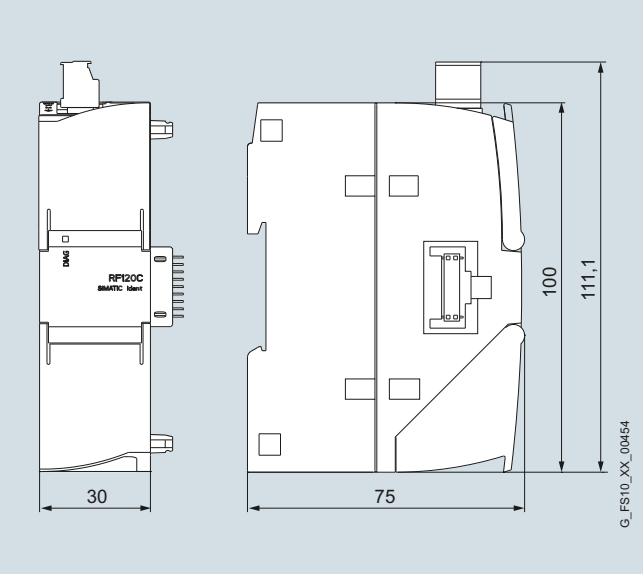

SIMATIC RF120C communication module

© Siemens AG 2016

ASM 475

Overview



The ASM 475 is a powerful communication module for connecting the MOBY D, SIMATIC RF200, RF300, RF600 and SIMATIC MV400 identification systems to the S7-300 and ET 200M.

Application

The ASM 475 communication module integrates the identification systems into the following automation systems:

- SIMATIC S7-300
- S7-400, PC (CP5412 (A2)) over ET 200M
- SINUMERIK 840D/810D

A maximum of two readers can be connected in parallel and operated in parallel mode.

Design

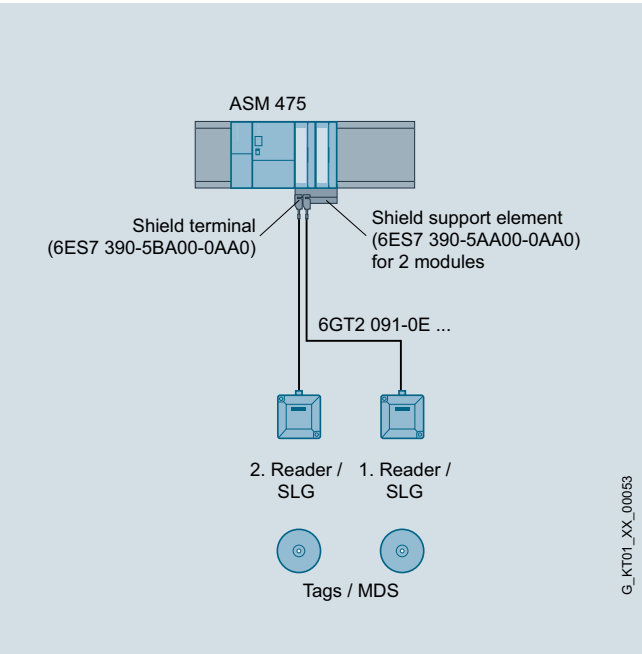

Function

As many as 8 ASM 475 communication modules can be plugged into one SIMATIC S7-300 rack and operated. For a multi-rack installation (maximum of 4), the ASM 475 communication modules can be plugged in and operated in each rack. This means that as many as 32 ASM 475s can be operated in the maximum configuration of a SIMATIC S7-300. The electrical isolation between the reader and SIMATIC S7-300 bus ensures a noise-resistant setup.

Error messages and operating states (transponder in field, command active, etc.) are indicated using LEDs.

Communication between the ASM 475 and S7-CPU takes place by means of acyclic P-bus message frames so that the useful data is transmitted very quickly and effectively. The ASM 475 is fully integrated into the diagnostics of the SIMATIC via a hardware support package (HSP). Depending on the PROFIBUS master, as many as 126 ET 200M modules can be operated on one PROFIBUS line.

The data in the transponder or Data Matrix Code is accessed direct by means of physical addresses using the ASM 475. The data is transferred between FB/FC 45, FB/FC 55 and ASM 475 at high speed and without placing a great load on the CPU.

© Siemens AG 2016

Technical specifications

Article number	6GT2002-0GA10
Product type designation	ASM 475 communication module
Suitability for operation	SIMATIC S7-300, ET 200M together with RF200/300/600, MOBY D/E/I/U
Transmission rate	
Transfer rate at the point-to-point connection serial maximum	115.2 kbit/s
Interfaces	
Design of the interface for point-to-point connection	RS422
Number of readers connectable	2
Type of electrical connection	
• of the backplane bus	S7-300 backplane bus
• of the PROFIBUS interface	(according to the head module)
• of Industrial Ethernet interface	(according to the head module)
• for supply voltage	Screw-type or spring-loaded terminals
Design of the interface to the reader for communication	Screw-type or spring-loaded terminals
Mechanical data	
Material	Noryl
Color	anthrazit
Supply voltage, current consumption, power loss	
Supply voltage	
• at DC Rated value	24 V
• at DC	20 ... 30 V
Consumed current at DC at 24 V	
• without connected devices typical	0.1 A
• with connected devices maximum	1 A
Permitted ambient conditions	
Ambient temperature	
• during operation	0 ... 60 °C
• during storage	-40 ... +70 °C
• during transport	-40 ... +70 °C
Protection class IP	IP20
Shock resistance	According to IEC 61131-2
Shock acceleration	150 m/s²
Vibrational acceleration	10 m/s²
Design, dimensions and weight	
Width	40 mm
Height	125 mm
Depth	120 mm
Net weight	0.2 kg
Mounting type	S7-300 rack
Cable length for RS422 interface maximum	1 000 m

Article number	6GT2002-0GA10
Product type designation	ASM 475 communication module
Product properties, functions, components general	
Display version	4 LEDs per reader connection, 2 LEDs for device status
Product function transponder file handler can be addressed	Yes
Protocol is supported	
• S7 communication	Yes
Type of parameterization	Object manager, GSD
Type of programming	FB 45, FB 55, FC 56 (FC 45/55 with limited functionality)
Type of computer-mediated communication	acyclic communication
Standards, specifications, approvals	
Certificate of suitability	CE, FCC, UL/CSA
Accessories	
Accessories	Front connector with screw-type or spring-loaded terminals

© Siemens AG 2016

Selection and ordering data

	Article No.
ASM 475 communication module For SIMATIC S7-300 and ET 200M, parameterizable	**6GT2002-0GA10**
Accessories	
Front connector (1 x per ASM 475)	
	
• with screw terminals	**6ES7392-1AJ00-0AA0**
• with spring-loaded terminals	**6ES7392-1BJ00-0AA0**
Shield connecting element (80 mm wide for 2 x ASM 475)	**6ES7390-5AA00-0AA0**
Shield connection clamp (1 x per reader cable)	**6ES7390-5BA00-0AA0**
MOBY D connecting cable pre-assembled, between ASM 475 and reader D1xS, 9-pole Sub-D plug, PUR material, CMG approved, suitable for cable carriers	
	
5 m	**6GT2491-4EH50**
20 m	**6GT2491-4EN20**
50 m	**6GT2491-4EN50**
Extension cable SIMATIC RF200 / RF300 / RF600 / MV400, PUR material, CMG approval, suitable for cable carriers, straight connector	
	
2 m	**6GT2891-4FH20**
5 m	**6GT2891-4FH50**
10 m	**6GT2891-4FN10**
20 m	**6GT2891-4FN20**
50 m	**6GT2891-4FN50**

	Article No.
SIMATIC RF200 / RF300 / RF600 / MV400 connecting cable pre-assembled, between the ASM 475 and RF200 / RF300 / RF600 / MV400, IP65, straight connector, PUR material, suitable for cable carriers, CMG approval, in the following lengths[1]:	
	
2 m	**6GT2891-4EH20**
5 m	**6GT2891-4EH50**
DVD „RFID-Systems Software & Documentation“	**6GT2080-2AA20**

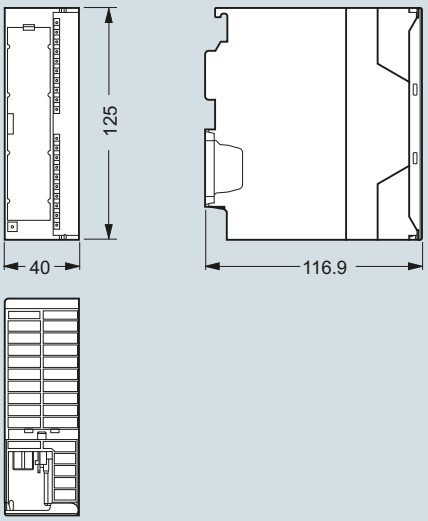

ASM 475 communication module

[1] The connecting cables can be extended using RF300 connecting cables of type 6GT2891-4Fxxx. These connecting cables are available in the lengths 2 m, 5 m, 10 m, 20 m and 50 m.

© Siemens AG 2016

Overview



RFID standard cable that is used with SIMATIC RFID systems preassembled in various lengths.

Benefits

get Designed for Industry

Due to the cETLus certification with CMG test and marking, the cable can also be installed in fire protection critical building parts (e.g. vertical installation in a cable duct).

The SIMATIC RFID standard cable can also be used in dynamic applications such as tow chains with a minimum bending radius of 75 mm.

Application

In addition to the normal areas of application in industry, the cable can also be laid:

- In areas subject to high heat
- For highly flexible applications (e.g. in cable carriers)
- In oil-contaminated industrial environments
- In outdoor applications exposed to solar radiation (UV radiation)

Technical specifications

Product type designation	SIMATIC RFID standard cable
Product description	Highly flexible communication line (6-wire)
Also suitable for use	in continuous motion applications, such as with drag chains
Cable designation	L-YC11Y 6x1x0.25 6x24AWG CMG
Electrical data	
Loop resistance per length/maximum	160 Ω/km
Mechanical data	
Number of electrical wires	6
Type of screen	Tin-plated braided shield made of copper wires with 0.13 mm diameter (36 AWG)
Wire diameter of the AWG24 wire	0.70 mm
Outer diameter	
• of the inner conductor	0.70 mm
• of the wire insulation	1.2 mm
• of the cable sheath	5.4 mm
Symmetrical tolerance of the outer diameter/of the cable sheath	0.2 mm
Material	
• of the wire insulation	PVC
• of the cable sheath	PUR
Color	
• of the data wire insulation	white / yellow / gray / pink / brown / green
• of the cable sheath	Black
Bending radius	
• for one-off bending / minimum permissible	21,6 mm
• for repeated bending / minimum permissible	43 mm
• with continuous bending	75 mm
Number of bending cycles	3 million
Number of bending cycles / note	Suitable as trailing cable for 3 million bending cycles with a bending radius of 75 mm
ensile load / maximum	200 N
Permitted ambient conditions	
Ambient temperature	
• during operation	-30 °C … 80 °C
• during storage	-30 °C … 80 °C
• during transport	-30 °C … 80 °C
• during installation	-30 °C … 80 °C
Ambient temperature / comment	Electrical properties measured at 20 °C
Behavior in fire	Flame-retardant acc. to IEC 60332-1-2
Resistance	
• to mineral oil	resistant
• to grease	resistant
• Radiological resistance / to UV radiation	resistant
Product properties, functions, components / general	
• Halogen-free	No
• Silicon-free	Yes
Standards, specifications, approvals	
• UL listing / at 300 V rating	Yes: CMG
• UL listing / at 600 V rating	No

© Siemens AG 2016

Selection and ordering data

	Article No.
MOBY D, connecting cable ASM 475 - SLG D1xS	
5 m	**6GT2491-4EH50**
20 m	**6GT2491-4EN20**
50 m	**6GT2491-4EN50**
MOBY D, connecting cable PC (RS232) - SLG D1x	
	
5 m	**6GT2691-4BH50**
20 m	**6GT2691-4BN20**
MOBY D, connecting cable ASM 456, RF160C, RF170C, RF180C, RF182C - SLG D1xS	
	
2 m	**6GT2691-4FH20**
RF200/300/600, connecting cable ASM 475 - reader	
	
2 m	**6GT2891-4EH20**
5 m	**6GT2891-4EH50**
RF200/300/600, RF120C connecting cable	
	
2 m	**6GT2091-4LH20**
5 m	**6GT2091-4LH50**
10 m	**6GT2091-4LN10**
RF200/300/600, M12 connecting cable ASM 456, RF160C, RF170C, RF180C, RF182C reader	
Reader connector, angled	
	
2 m	**6GT2891-4JH20**
5 m	**6GT2891-4JH50**
10 m	**6GT2891-4JN10**

	Article No.
RF200/300/600, connecting cable ASM 456, RF160C, RF170C, RF180C, RF182C reader, optical code reader device	
Can also be used as RF200/300/600, MOBY D extension cable to ASM 456, RF160C, RF170C, RF180C, RF182C, straight connector	
	
2 m	**6GT2891-4FH20**
5 m	**6GT2891-4FH50**
10 m	**6GT2891-4FN10**
20 m	**6GT2891-4FN20**
50 m	**6GT2891-4FN50**
RF300, connecting cable PC (RS232) - RF380R	
5 m; 24 V connection with M12 plug	**6GT2891-4KH50**
	
5 m; 24 V connection with open ends	**6GT2891-4KH50-0AX0**
	
Accessories	
Connecting cable, communication module - reader, without connector	
50 m	**6GT2090-4AN50**
120 m	**6GT2090-4AT12**
800 m	**6GT2090-4AT80**
M12 connector, 8-pin	
with screw-type terminal, for max. 0.5 mm^2 wires.	
Ordering quantity 5 units or multiples thereof.	
• Female for Reader	**6GT2090-0BD00**
• Male for communication modules ASM 456, RF160C, RF170C, RF180C, RF182C, RFID 181EIP	**6GT2090-0BE00**
M12 connector, 4-pin	**6GK1907-0DB10-6AA3**
	
Male with screw-type terminal for wide-range power supply (see page 2/125).	
Pack of 3.	

© Siemens AG 2016

Overview

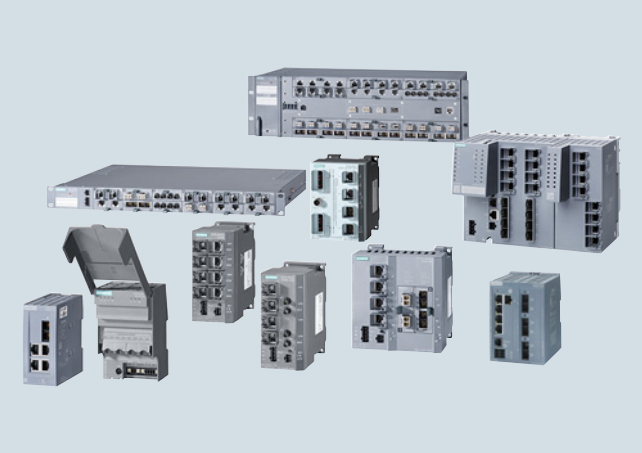

SCALANCE X Industrial Ethernet switches



Industrial Wireless LAN SCALANCE W

The SCALANCE product family is designed primarily for use in diverse industrial applications.

It provides everything for ultra efficient industrial networks and bus systems: Powerful, future-proof network components for reliable operation in any type of industrial environment:

- A cabling system for fast, pre-assembled connection on site.
- Fast redundancy for high availability.
- Process fault diagnostics for permanent monitoring of the network components.

The SCALANCE network components are characterized by:

- Comprehensive portfolio tailored to data communication requirements in different industries.
- Coordinated network components from a single source.
- Conformity according to global standards, e.g. IEEE 802.3, IEEE 802.11n.
- Integration in the TIA Portal.
- Future-proof and innovative technology.
- 5-year warranty on all SCALANCE products with delivery date as of January 1, 2015

SCALANCE offers a comprehensive portfolio of integrated industrial communication solutions. With this portfolio, you will find the perfect connection for every industrial application – from the automotive to the chemical industry, as well as in OEM manufacturing and process industries.

SCALANCE product family

SCALANCE X – Industrial Ethernet switches

A graded portfolio of Industrial Ethernet switches in different designs and performance classes enables optimum solutions for all types of switching tasks – not only in harsh industrial environments.

SCALANCE W – Industrial Wireless LAN

Wireless communication with Industrial Wireless LAN (IWLAN) opens up more flexibility in network planning and even provides protection against failures with respect to personnel and machine safety.

SCALANCE M – Industrial modems and routers

Network widely distributed plants or machines with a wide range of modems and routers - via telephone, mobile wireless or Internet, depending on requirements.

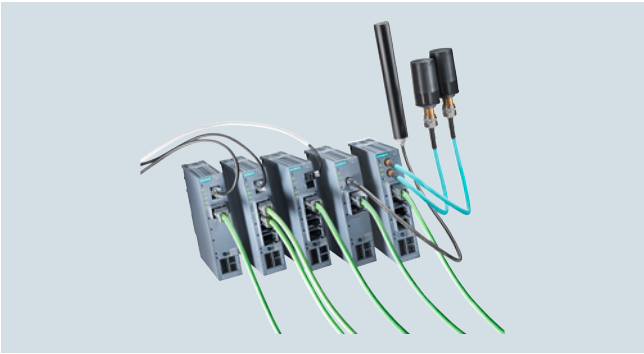

SCALANCE S – Industrial Security

The Industrial Security product portfolio offers security solutions specifically for industrial automation technology to avoid risks with respect to data security.



Selection Tools

To help you find the right Industrial Ethernet switches, configure modular versions, and select SIMATIC Ident devices, the TIA Selection Tool is available at:

http://www.siemens.com/tia-selection-tool

© Siemens AG 2016

Overview

With the SCALANCE X product family, Siemens offers a wide range of switches for industrial use. They can be used for all Ethernet-based SIMATIC Ident devices (e.g. MV400 optical reader, RF600 reader, RF180C communication module) to establish the network architecture.

Some of the switches recommended by Siemens are listed under the accessories for the SIMATIC Ident devices (e.g. the SCALANCE X108PoE Industrial Ethernet with the MV440 optical reader).

In this section, you can find an extract from the SCALANCE portfolio as a supplement.

You can find more information and the entire portfolio of SCALANCE switches, cables and network accessories, with the associated order numbers, in the Catalog IK PI.

Product versions

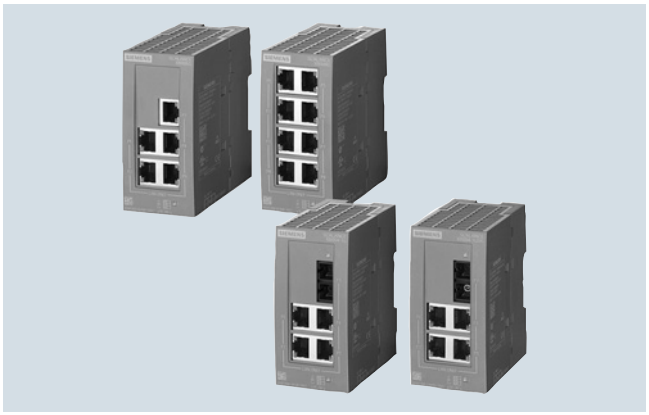

SCALANCE XB005 and SCALANCE XB008
SCALANCE XB005G and SCALANCE XB008G (Gigabit)

- Unmanaged switches for setting up Industrial Ethernet networks in line and star structures
- Enclosure for space-saving installation in control cabinets or boxes on a standard mounting rail
- SCALANCE XB005 and SCALANCE XB008 5 or 8 x 10/100 Mbps RJ45 ports, electrical
- SCALANCE XB005G and SCALANCE XB008G (Gigabit) 5 or 8 x 10/100/1 000 Mbps RJ45 ports, electrical
- SCALANCE X10 unmanaged switches for setting up Industrial Ethernet networks in line and star structures
- Enclosure for space-saving installation in control cabinets or boxes on standard mounting rails
- SCALANCE XB005 and SCALANCE XB008 5 or 8 x 10/100 Mbps RJ45 ports, electrical
- SCALANCE XB005G and SCALANCE XB008G (Gigabit) 5 or 8 x 10/100/1 000 Mbps RJ45 ports, electrical

SCALANCE X108PoE

- Unmanaged switches for setting up electrical Industrial Ethernet star and line topologies
- with eight electrical ports, two of which have Power-over-Ethernet functionality
- Diagnostics on the device using LEDs (power, link status, data traffic) and signaling contact (message screen can be set using a button on the device)
- The RJ45 ports are suitable for industrial use and have additional retaining collars: Optimized for connecting the IE FC RJ45 Plug 180.



SCALANCE XB-200

- Managed switches for setting up 10/100 Mbps Industrial Ethernets in a line, star or ring topology (RM integrated)
- Electrical and optical nodes or network connections can be implemented by means of 8 or 16 RJ45 ports (10/100 Mbps) or 3 fiber-optic ports (100 Mbps)
- SCALANCE XB208; 8 x 10/100 Mbps RJ45 port, electrical
- SCALANCE XB205-3; 5 x 10/100 Mbps RJ45 port, electrical; 3 x 10/100 Mbps ports, fiber-optic cable
- SCALANCE XB216; 16 x 10/100 Mbps RJ45 port, electrical
- Rugged plastic enclosure
- Diagnostics on the device by means of LEDs (power, link status, data communication)
- The devices feature SNMP access, integral web server remote diagnostics and signaling over the network
- Diagnostics and parameter assignment via website or console port
- Supports both PROFINET and Ethernet/IP industrial protocols in the same device (software-switchable)
- All device versions available with default setting for both PROFINET and Ethernet/IP

© Siemens AG 2016

Benefits

get Designed for Industry

SCALANCE XB005 and SCALANCE XB008
SCALANCE XB005G and SCALANCE XB008G (Gigabit)
SCALANCE X108PoE

- Implementation of simple and low-cost machine networking
- Space-saving installation thanks to small, compact design
- Can be used in industrial environments
- Quick commissioning without configuration
- Easy on-site diagnostics via LEDs
- Use of uncrossed connecting cables possible thanks to the integrated auto crossover function
- Reduction of network installation costs by transmitting data and energy (Power-over-Ethernet) via the conventional 4-core Industrial Ethernet cable (only SCALANCE X108PoE), for example, for MV400 optical reader
- Additional power supply units can be omitted thanks to generating the Power-over-Ethernet voltage (48 V DC) direct at the switch (SCALANCE X108PoE only), for MV400 optical reader, for example.

SCALANCE XB-200

- Ideal solution for configuring Ethernet line, ring and star topologies
- High network availability due to design of redundant ring structures on the basis of high-speed redundancy (HRP), PROFINET-compliant ring redundancy (MRP), redundancy manager integrated
- Quick and easy diagnostics with LEDs on the device, using integrated Web server and via SNMP
- Integration of SCALANCE XB-200 switches in the existing network management infrastructure, e.g. SINEMA Server, with SNMP access point
- Load limiting when using multicast-based protocols (Voice over IP, Video) thanks to IGMP Snooping/Querier and additional multicast and broadcast limiting per port
- Uncrossed connecting cables can be used due to the integrated auto crossover function
- Support of the two industrial protocols, PROFINET and Ethernet/IP, in the same device
- Low-maintenance operation due to fanless construction
- Support of VLANs permits integration into Enterprise Security Policies

Application

The unmanaged Industrial Ethernet switches of the SCALANCE XB-000 line allow cost-effective solutions for setting up small, electrical/optical star or line topologies with switching functionality in machines or plant units. The enclosure is designed for space-saving installation in a control cabinet on a standard rail.

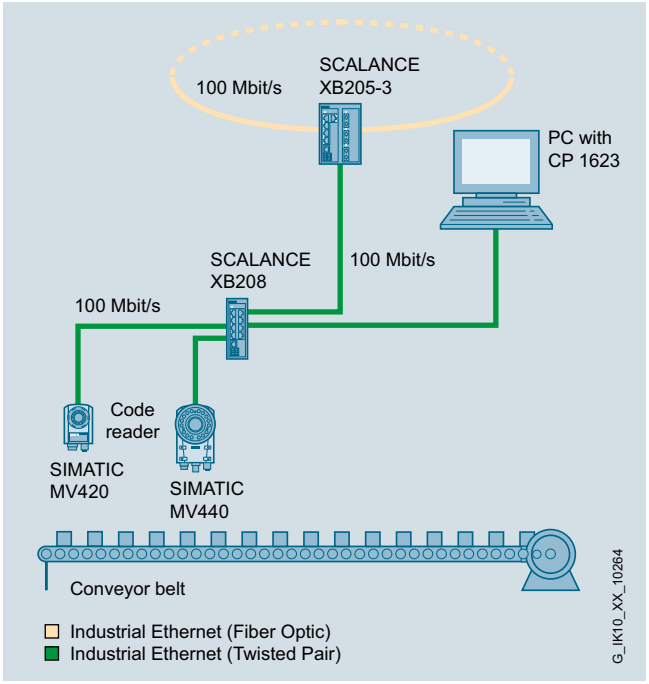

Integration of the SIMATIC MV420 and MV440 into the automation network

The SCALANCE XB-200 Industrial Ethernet switches are simple, low-cost Industrial Ethernet switches that contain the necessary software functionalities for automation with various protocols. The devices with degree of protection IP20 are designed for operation in the control cabinet.

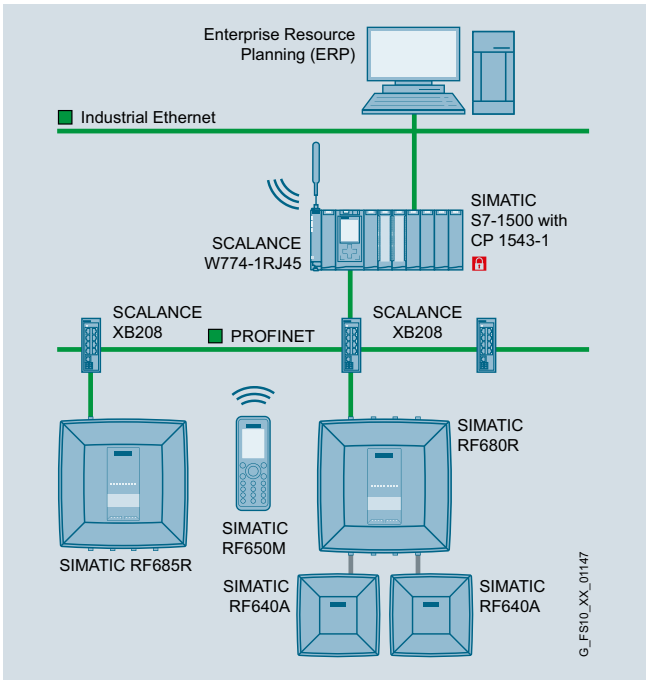

Connection of SIMATIC RF685R and RF680R to PROFINET

5

© Siemens AG 2016

Overview



With the SCALANCE product family, Siemens offers a wide range of Industrial Wireless LAN network components for industrial use. They can be used for all Ethernet-based SIMATIC Ident devices (e.g. MV400 optical readers, RF600 reader, RF180C communication module) to establish a wireless network architecture.

Some of the IWLAN components recommended by Siemens are listed under the accessories for the SIMATIC Ident devices (e.g. SCALANCE W788-1 M12 for the SIMATIC RF650M handheld terminal (see page 3/41 in Catalog ID 10, 2016).

The SCALANCE W products provide a combination of reliability, ruggedness and security in a single product:

- For use by industrial and automation customers
- For outdoor use under demanding climatic conditions
- For low-cost integration into the control cabinet or in devices

Mobile end devices (e.g. SIMATIC RF650M) allow for an uninterrupted flow of information from the enterprise level right through to the production level. This means that information can be provided quickly, reliably and easily at the right place and at the right time by wireless.

In this section, you can find an extract from the SCALANCE W-700 portfolio as a supplement.

You can find more information and the entire portfolio of SCALANCE W, cables, antennas and antenna accessories, with the associated order numbers, in Catalog IK PI.

Product versions

SCALANCE W788-1 M12

A radio card is permanently installed, functional scope can be expanded by using a KEY-PLUG W780 iFeatures.

SCALANCE W788-2 M12

Two radio cards are permanently installed, functional scope can be expanded by using a KEY-PLUG W780 iFeatures.

Benefits

get Designed for Industry

- Predictable data traffic (deterministic response) and defined response times on the wireless link
- Reliable wireless link, e.g. by using MIMO technology and monitoring the wireless link
- Cost savings due to one single wireless network both for process-critical data and for non-critical communication
- Future-proof because all products are compatible with the internationally recognized WLAN standard IEEE 802.11n, suitable for license-free 2.4 GHz and 5 GHz frequency bands (ISM bands)
- Reduced operating costs since there is no wear and tear on rotating and moving plant sections
- Investment protection because flexible feature expansions (iFeatures) are possible using the KEY-PLUG

Application

The access points of the SCALANCE W700 product line are designed for both industrial use and for demanding climatic requirements outdoors.

Versions for the inexpensive integration into cabinets or machines are also available. They provide a reliable wireless link, redundancy mechanisms, and fast handover of nodes from one access point to the next (roaming). This allows processes to be monitored and loss of production due to machine downtimes to be avoided.

Industrial Wireless LAN (IWLAN) can also be used in time-critical applications in factory automation (PROFINET) or for safety-related signals (PROFIsafe).

SCALANCE W products are silicone-free and can therefore also be used in paint shops.

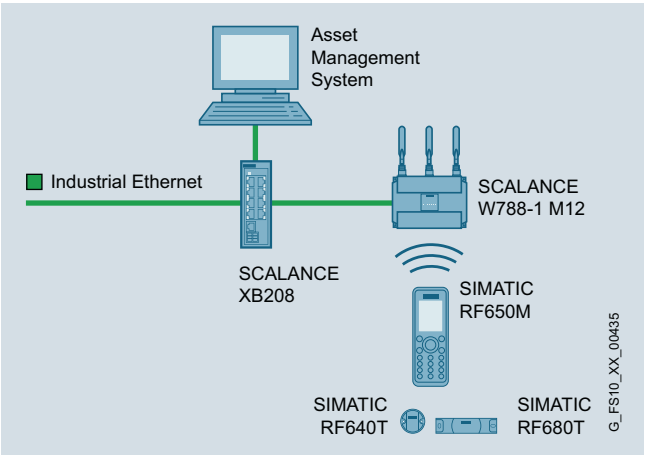

Mobile RFID data acquisition system, connected via SCALANCE W788-1 M12

5