Furnotel

Chiller & Freezer



FEU13570CS201

Dimensions:	1360*700*850+100mm
Package Dimensions:	1420*740*1010mm
Voltage:	220V/50Hz
Capacity:	260L
Power:	286w
Cooling Method:	Air Cooled
Refrigerant:	R134a
Compressor:	Embraco
Thermostat:	COPELAND
Fan:	WEIGUANG
Temperature Range:	+2℃~+8℃
Shelves:	2pcs
Net Weight:	100kg
Gross Weight:	110kg
Material:	Stainless Steel 304
High Density Foam Insulation Thickness:	50mm

2 Doors Fancooling Undercounter Chiller with Backsplash

*Compressor brand Embraco/Secop, low noise, fast cooling, durable.

*Copeland temperature controller, accuratetemperature control and 8 types of errors warning.

*Condenser with 9.52mm diameter 0.32mm thick copperpipe, anti-corrosion, good heat dissipation, usually it' s 8-10 years service life.

*Plastic-coated shelf, available to replace with 1/1 GN pan. It can bear 30kg for each layer.

*Detachable high density door gasket.

*Feet &Caster:Optional.

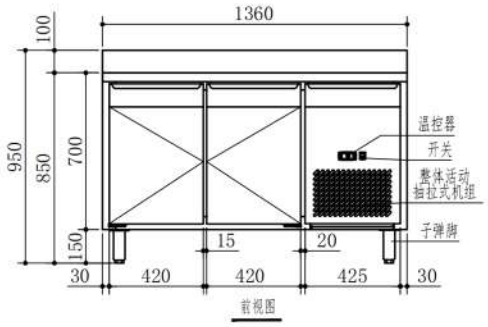

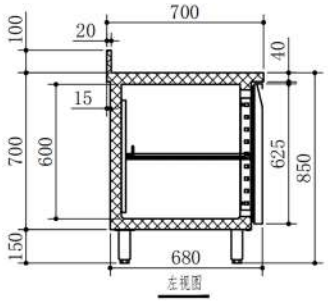

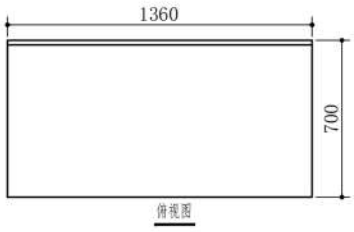







GUANGZHOU FURNOTEL KITCHEN EQUIPMENT CO.,LTD
Rm 1802, Tian'an Technology Park Headquarter Center 1, Panyu Avenue, Guangzhou, China
Tel: +86 20 34709971
Email: info@furnotel.cn
Web: www.furnotel.cn