Furnotel

# Chiller & Freezer



## FEU9070CG100

| | |
|---|---|
| Dimensions: | 900*700*850mm |
| Package Dimensions: | 960*740*910mm |
| Voltage: | 220V/50Hz |
| Capacity: | 130L |
| Power: | 405w |
| Cooling Method: | Air Cooled |
| Refrigerant: | R134a |
| Compressor: | Embraco |
| Thermostat: | COPELAND |
| Fan: | WEIGUANG |
| Temperature Range: | +2℃~+8℃ |
| Shelves: | 1pcs |
| Net Weight: | 80kg |
| Gross Weight: | 90kg |
| Material: | Stainless Steel 304 |
| High Density Foam | |
| Insulation Thickness: | 50mm |

## 1 Glass Door Fancooling Undercounter Chiller

*Compressor brand Embraco/Secop, low noise, fast cooling, durable.
*Copeland temperature controller, accuratetemperature control and 8 types of errors warning.
*Condenser with 9.52mm diameter 0.32mm thick copperpipe, anti-corrosion, good heat dissipation, usually it' s 8-10 years service life.
*Plastic-coated shelf, available to replace with 1/1 GN pan. It can bear 30kg for each layer.
*Detachable high density door gasket.
*Feet &Caster:Optional.

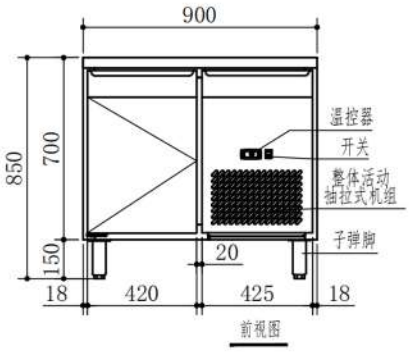


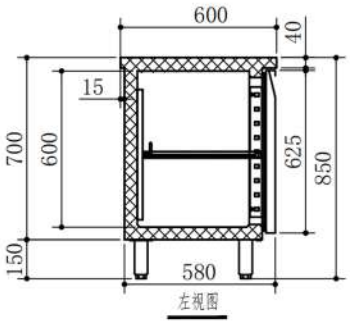


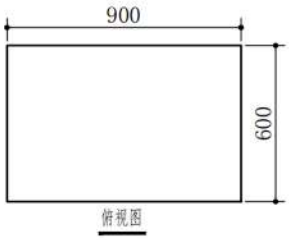








GUANGZHOU FURNOTEL KITCHEN EQUIPMENT CO.,LTD
Rm 1802, Tian'an Technology Park Headquarter Center 1, Panyu Avenue, Guangzhou, China
Tel: +86 20 34709971
Email: info@furnotel.cn
Web: www.furnotel.cn