DC series

Solar DC waterproof Isolator Switch

- SNISO-32
- SNISO-100

SUNNOM

SUNNOM

SNISO-50

16-50A 1000V DC ISOLATOR SWITCH WITH MC4

Application

- Rated Voltage: DC1000V
- Protection degree: IP66
- Connection Type: MC4, M20, M25
- Working Temperature: -5 °C-+60 °C
- Standard: IEC 60947-3

Functions

- Compact and suitable where space is limited;
- DIN rail mounting for easy installation;
- Load-breaking up to 8 times rated current making it ideal for motor isolation;
- Doublebreak with silver superior performance, reliability and long lasting;
- Padlockable handld- tamerproof;
- Highly visible red/yellow handle;
- Easy to install and operate;

Technical Parameters

Name		Unit	SNISO-32		
Rated current		A	16	25	32-50
Isolation voltage		V	1000	1000	1000
Rated operating currentDC21B					
Series connection	750V	A	16	25	32
Parallel connection	750V	A	29	45	50
	1125V	A	13	16	20
Series connection	1500V	A	9	11	13
Series connection	750V	A	16	25	32
	1125V	A	16	25	32
	750V	A	16	25	32
4p Series connection	1125V	A	16	25	32
	1500V	A	16	25	32
Protection level			IP66		
Mechanical life			10	10	10
Rated short circuit current(1s)1 2,4/2+2H		A	800/1300	900/1500	1000/1700
Breaking capacity		Icm	800/1300	900/1500	1000/1700
Using ambient temperature			-40℃ ~+70℃		
Height above sea leval			≤2000m,≥2000The above capacity reduction is used		

Connection

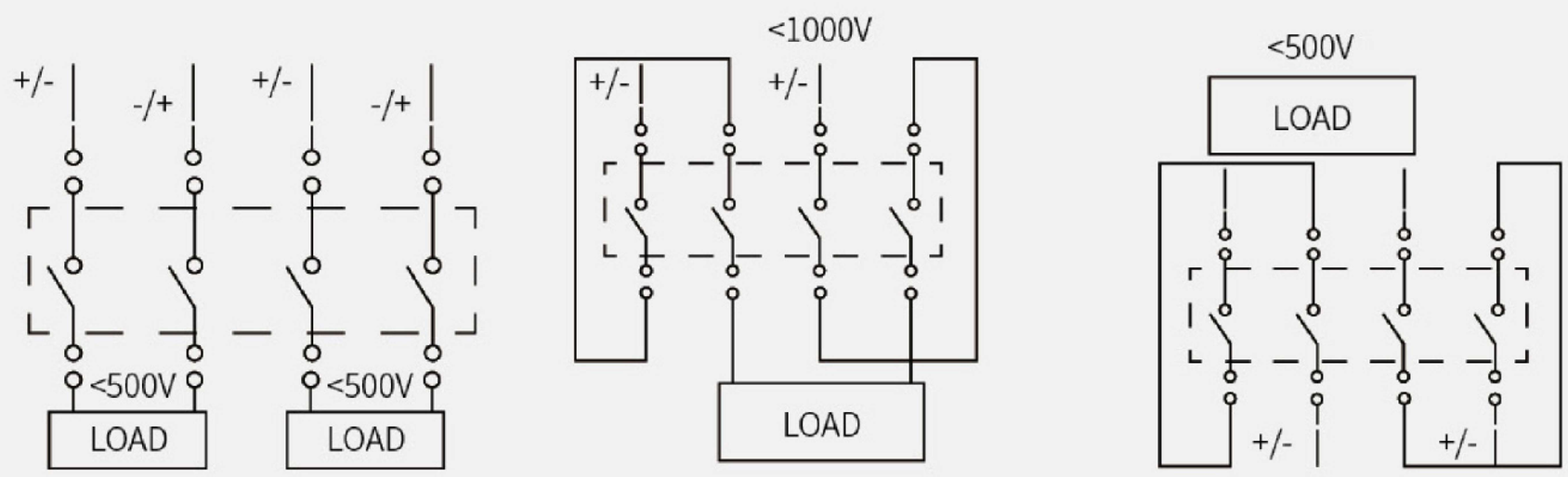
+/-
-/+
+/-
-/+
<500V
<500V
LOAD
LOAD
<1000V
+/-
+/-
LOAD
<500V
LOAD
+/-
+/-

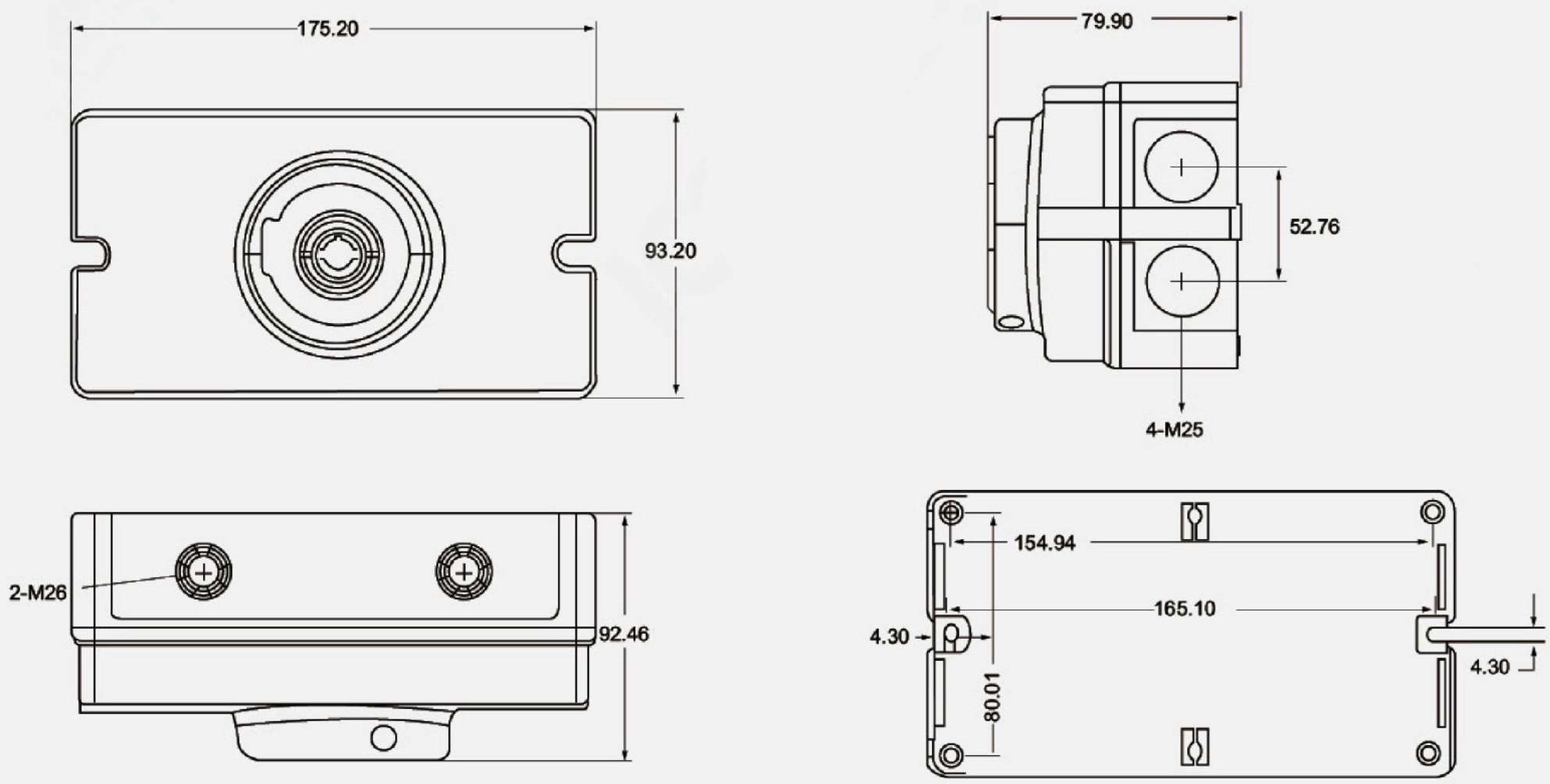
175.20
93.20
79.90
52.76
4-M25
2-M26
92.46
154.94
165.10
4.30
4.30
80.01

SUNNOM

SNISO-100

SOLAR DC ISOLATOR SWITCH 16-100A,UP TO DC 1500V

Application

- Compact and suitable were space is limited
- DIN rail mounting for easy installation
- Load-breaking up to 8 times rated current making it ideal for motor isolation
- Double-break with silver rivets-superior performance, reliability and long lasting
- Highly visible red/yellow handle
- Large padlockable red/yellow or grey/black handles
- Comprehensive range, 16 to 100A models, Up to DC 1500V
- High IP66 rating
- High breaking capacity with 12.5 mm contact air gap
- Easy to install and operate
- Easy snap-on fitting of auxiliary switches

Technical Parameters

Name		Unit	SNISO-100				
Rated current		A	16	25	32	63	100
Isolation voltage		V	1500	1500	1500	1500	1500
Rated operating currentDC21B							
Series connection	750V	A	16	25	32	63	100
Parallel connection	750V	A	29	45	50	80	160
	1125V	A	13	16	20	38	80
Series connection	1500V	A	9	11	13	26	50
Series connection	750V	A	16	25	32	63	100
	1125V	A	16	25	32	63	100
	750V	A	16	25	32	63	100
4p Series connection	1125V	A	16	25	32	63	100
	1500V	A	16	25	32	63	100
Protection level			IP66				
Mechanical life			10	10	10	10	10
Rated short circuit current(1s)1 2,4/2+2H		A	800/1300	900/1500	1000/1700	1100/1200	1200/2500
Breaking capacity		Icm	800/1300	900/1500	1000/1700	1100/1200	1200/2500
Using ambient temperature			-40°C~+70°C				
Height above sea leval			≤2000m,≥2000The above capacity reduction is used				

Connection

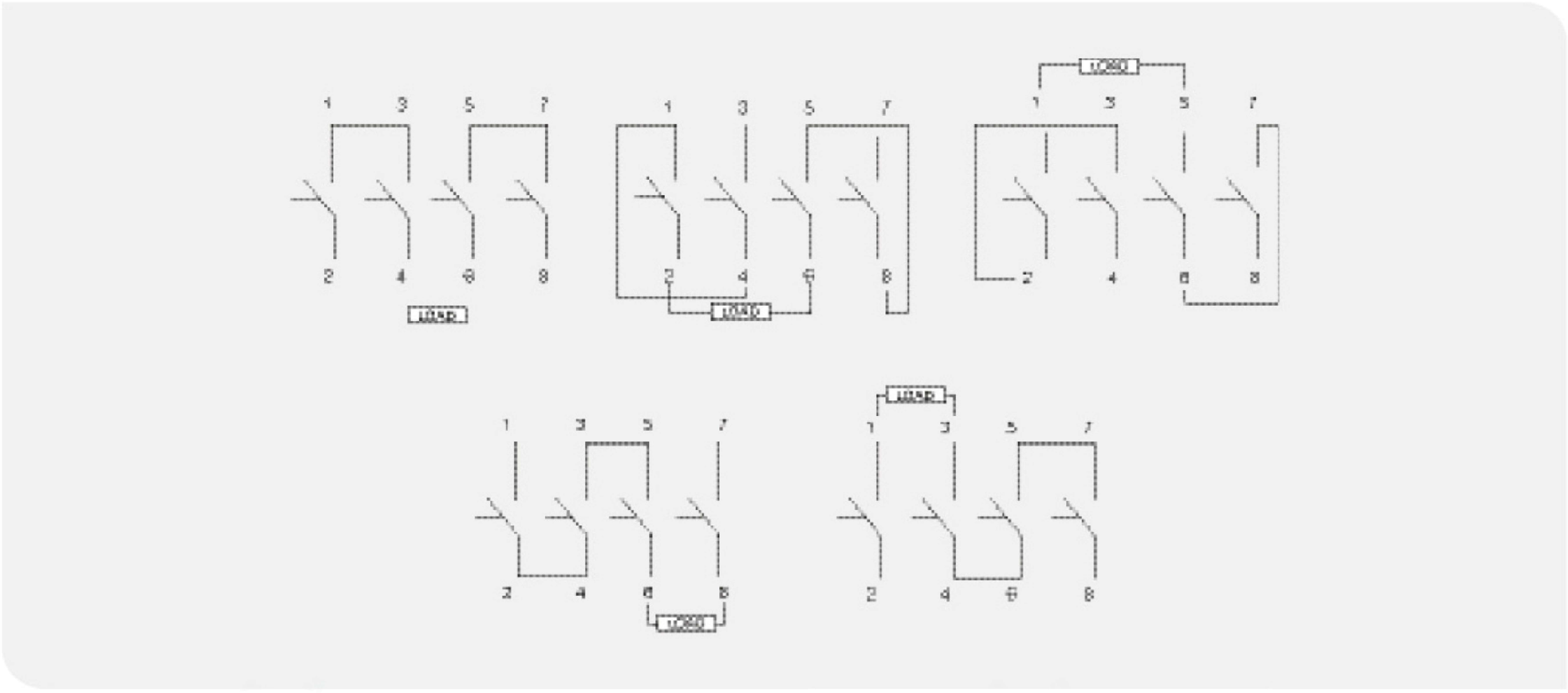

Characteristic Curve

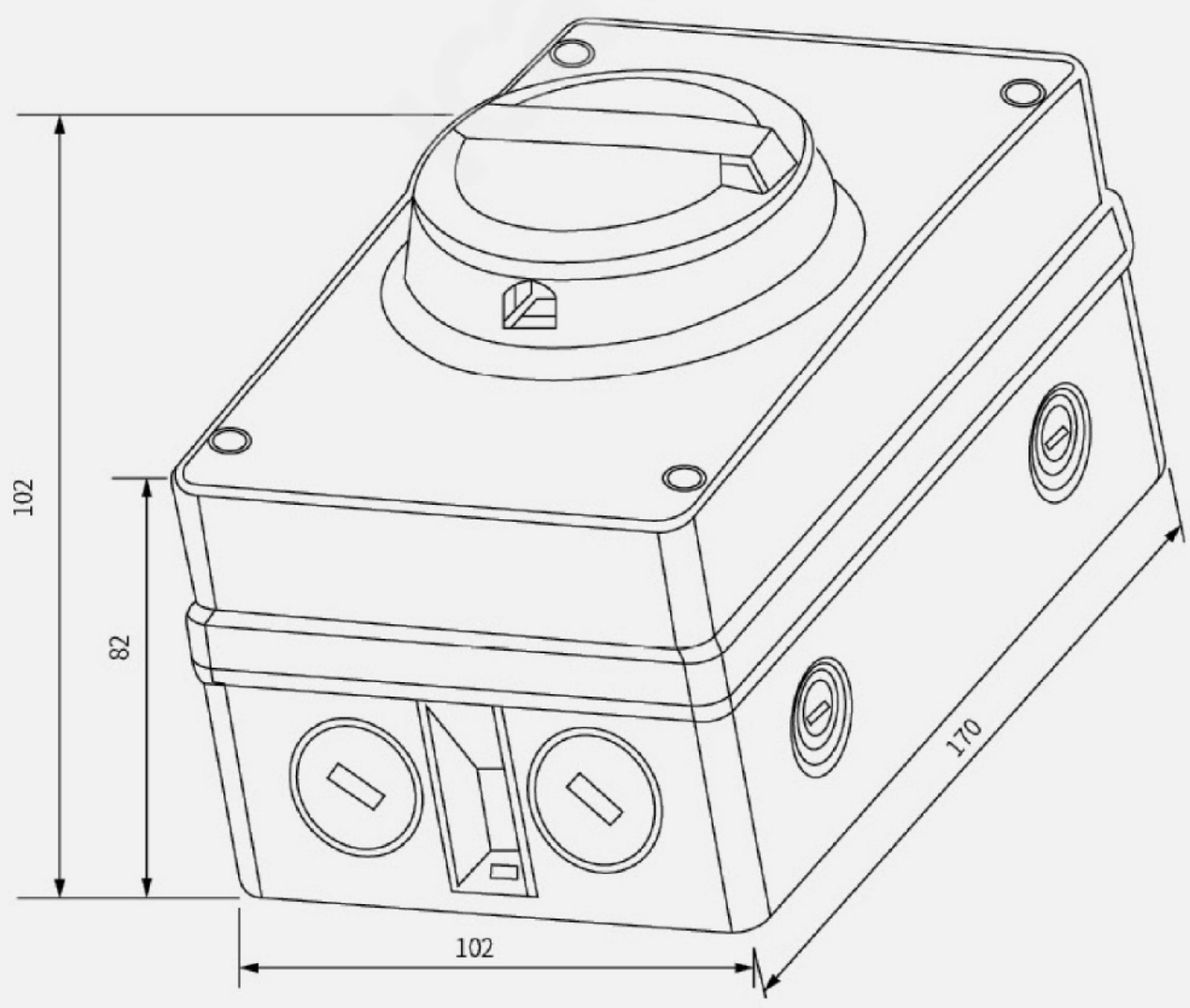

SUNNOM

SNISO-100

DIN RAIL MOUNTING SOLAR DC ISOLATOR SWITCH

Application

- Max 100A and 1500V
- Available in 2 to 12 Pole, suit for 1 ~ 6 MPPT
- CE&TUV Certificated
- Working Temperature: Full efficiency between -25°C ~ 70°C
- 5 years Guarantee
- Handy Locking Mechanism while off keeps it safe from Children or Un-Authorized access
- Operator Independent trigger Ratchet Switching and Knife
- Edge Self Cleaning Contact Mechanism

Technical Parameters

Name		Unit	SNISO-100				
Rated current		A	16	25	32	63	100
Isolation voltage		V	1500	1500	1500	1500	1500
Rated operating currentDC21B							
Series connection	750V	A	16	25	32	63	100
Parallel connection	750V	A	29	45	50	80	160
	1125V	A	13	16	20	38	80
Series connection	1500V	A	9	11	13	26	50
Series connection	750V	A	16	25	32	63	100
	1125V	A	16	25	32	63	100
	750V	A	16	25	32	63	100
4p Series connection	1125V	A	16	25	32	63	100
	1500V	A	16	25	32	63	100
Protection level			IP66				
Mechanical life			10	10	10	10	10
Rated short circuit current(1s)1 2,4/2+2H		A	800/1300	900/1500	1000/1700	1100/1200	1200/2500
Breaking capacity		Icm	800/1300	900/1500	1000/1700	1100/1200	1200/2500
Using ambient temperature			-40ºC~+70ºC				
Height above sea leval			≤2000m,≥2000The above capacity reduction is used				