Dc series

Solar DC Fuse

- SNPV-30 1000V
- SNPV-32 1000V
- SNPV-32 1500V
- SNPV-160 1000V
- SNPV-250 1000V
- SNPV-400 1000V
- SNPV-630 1000V

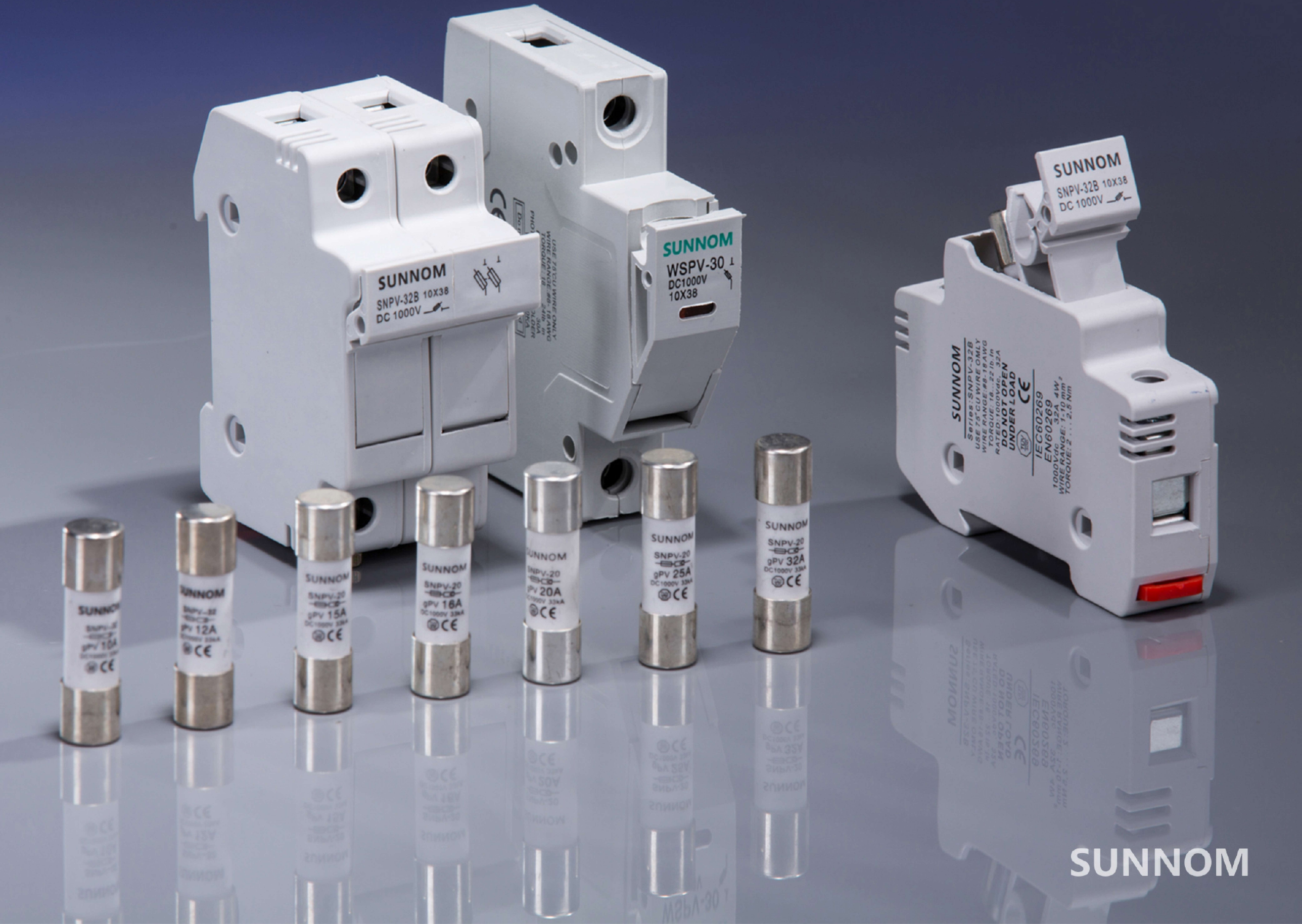

SUNNOM

SNPV-30
SOLAR DC FUSE

SUNNOM

Application

A range of 10×38mm fuse links specifically designed for protecting photovoltaic strings. These fuse links are capable of interrupting low overcurrents associated with faulted photovoltaic string arrays (reverse current, multi-array fault).

Structural Characteristics

- According to IEC60269-6
- Rated current: 1-32A
- Rated voltage: DC 1000V
- Operating class gPV for Solar protection

Specifications

Pole	1P
Rated Voltage Ue (V DC)	1000
Rated Current In (A)	1,2,3,4,5,6,8,10,12,15,16,20,25,30,32

Connection and Installation

Connection(mm²)	2.5-10
Working Temperature(℃)	-30~+70
Resistance And Damp Hot	Class 2
Altitude(m)	≤ 2000
Relative Humidity	≤ 95%
Protection Class/Degree	IP20
Pollution	3
Installation Environment	No obvious shock and vibration
Installation Class/Type	Class III/DIN rail

Size(mm)

Size/Dimension(mm)		
(WxHxL)	W	22
	H	66
	L	96
Fuse Size		10×38mm
Fuse holder Weight (kg)		0.11
Fuse link weight(kg)		0.08

PV fuse Description

- Photovoltaic system fuse accord with UL248-1 standard.
- Photovoltaic battery dc fuse designed to used for photovoltaic (PV) system.
- Main effect is to protect the solar panels. Solar panels points in effective condition is broken.
- Fault light cells break points at the same time, does not affect other normal work of light from the stack.
- Technical Data Rated coltage: DC1000V Breaking capacity: 25KA Function level: PV.

SNPV-30
SOLAR DC FUSE

Dimensions

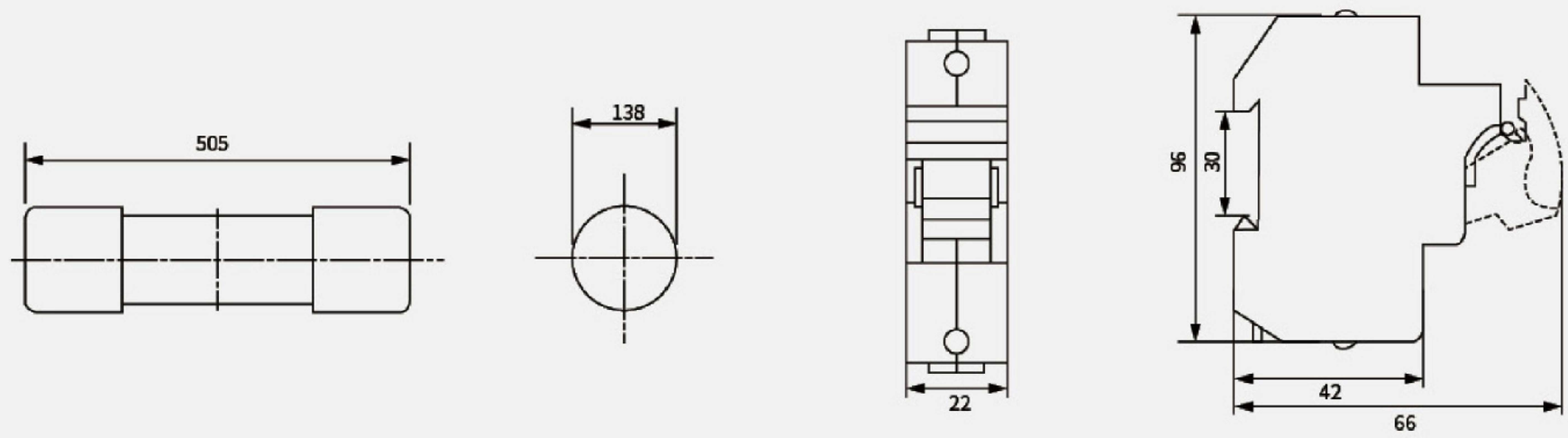

Installation

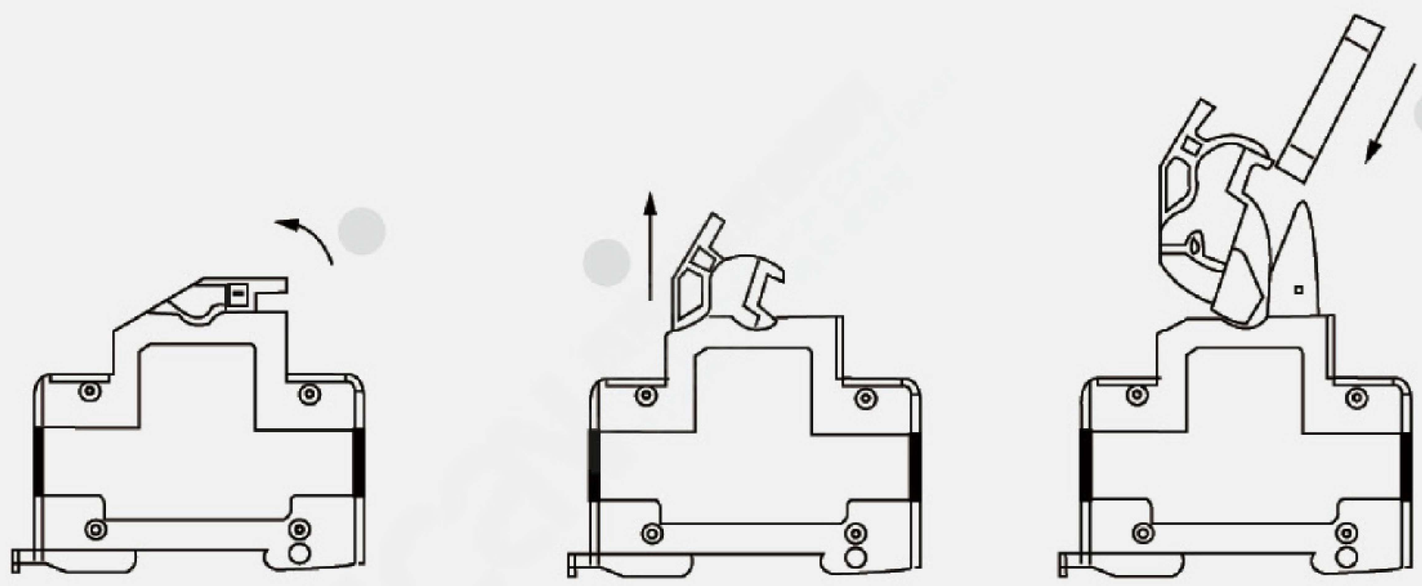

Characteristic Curve

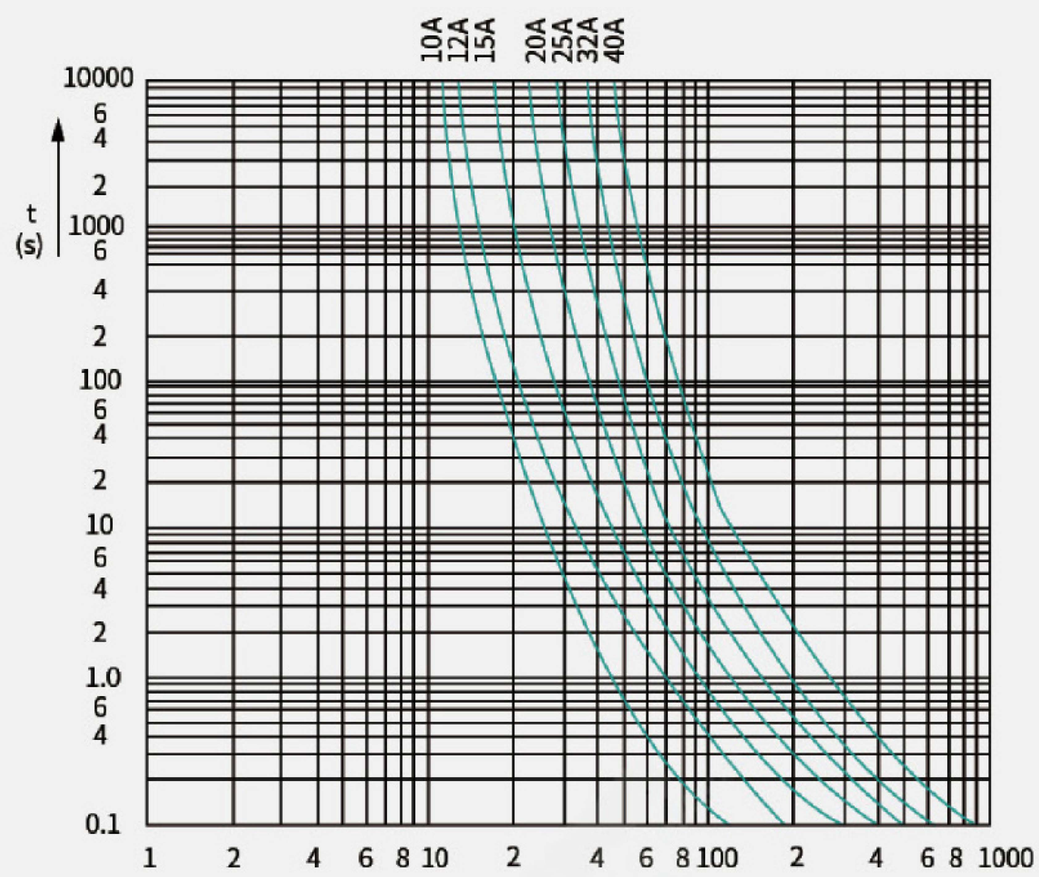

SNPV-32
SOLAR DC FUSE

SUNNOM

Application

A range of 10x38mm fuse links specifically designed for protecting photovoltaic strings. These fuse links are capable of interrupting low overcurrents associated with faulted photovoltaic string arrays (reverse current, multi-array fault).

Structural Characteristics

- According to IEC60269-1
- Rated current: 1-32A
- Rated voltage: DC 1000V
- Rated breaking capacity:DC 20KA
- Operating class gPV for Solar protection

Specifications

Pole	1P
Rated Voltage Ue (V DC)	1000
Rated Current In (A)	1,2,3,4,5,6,8,10,12,15,16,20,25,30,32
Biggest Block Ability(KA)	20
The Most High Power Consumption(W)	2.5

Connection and Installation

Connection(mm^2)	2.5-10
Working Temperature(℃)	-30~+70
Resistance And Damp Hot	Class 2
Altitude(m)	≤ 2000
Relative Humidity	≤ 95%
Protection Class/Degree	IP20
Pollution	3
Installation Environment	No obvious shock and vibration
Installation Class/Type	Class III/DIN rail

Size(mm)

Size/Dimension(mm)		
(WxHxL)	W	18
	H	60
	L	78
Fuse Size		10×38
Fuse holder Weight (kg)		0.011
Fuse link weight(kg)		0.07

PV fuse Description

- Photovoltaic system fuse accord with UL248-1 standard.
- Photovoltaic battery dc fuse designed to used for photovoltaic (PV) system.
- Main effect is to protect the solar panels. Solar panels points in effective condition is broken.
- Fault light cells break points at the same time, does not affect other normal work of light from the stack.
- Technical Data Rated coltage: DC1000V Breaking capacity: 25KA Function level: PV.

Dimensions

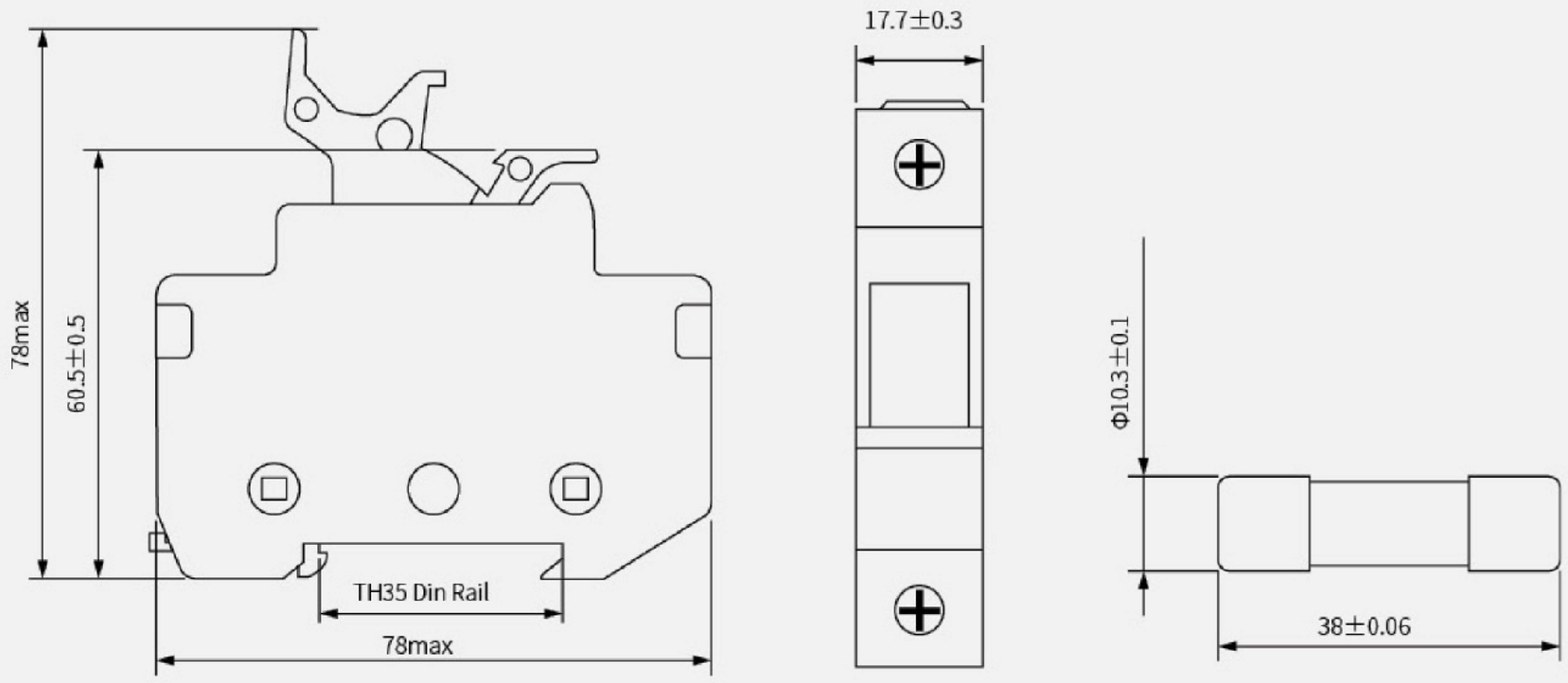

Characteristic Curve

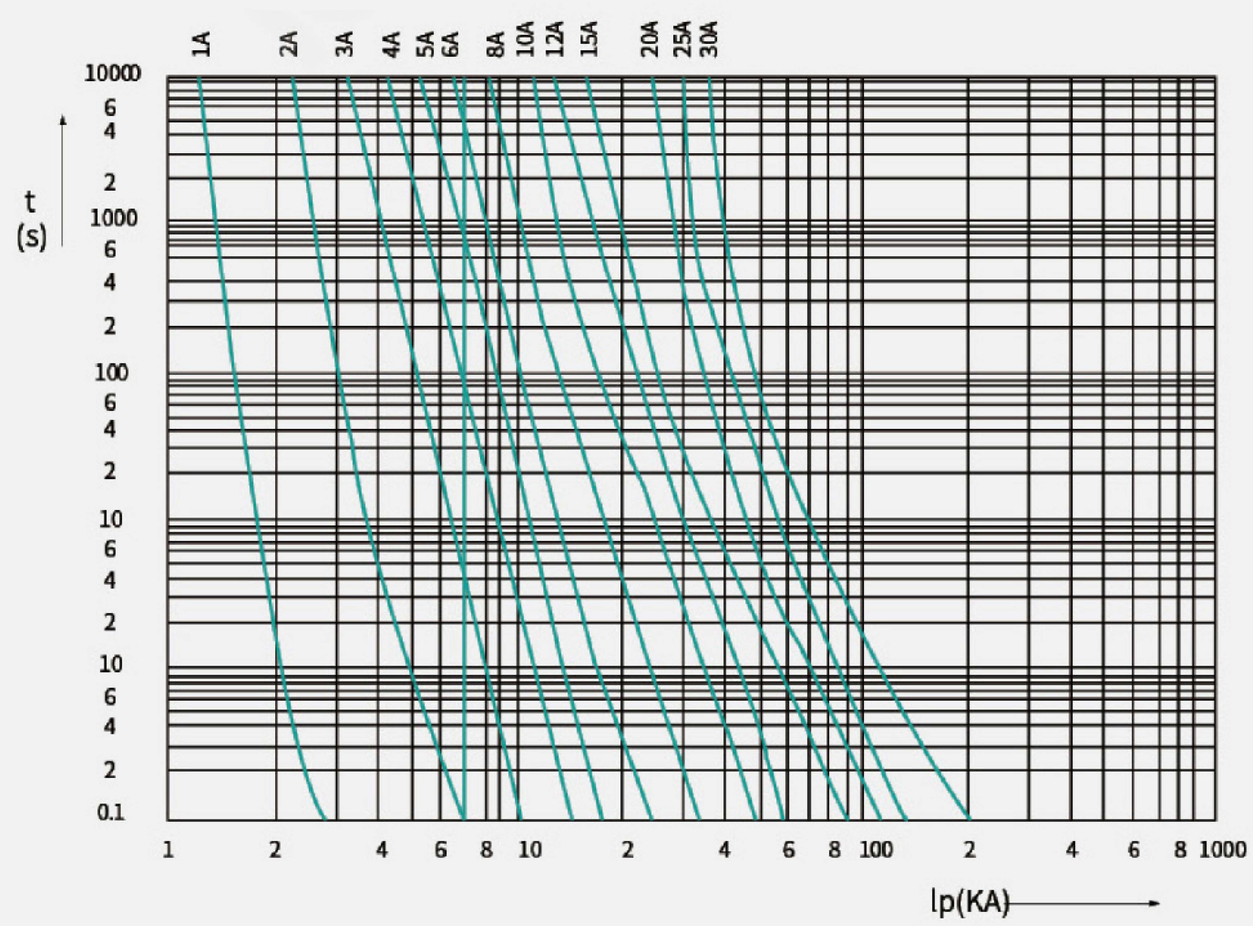

SNPV-32 1500V

SOLAR DC 1500V FUSE

SUNNOM

Application

A range of 10x85mm PV fuses specifically designed for protecting and isolating photovoltaic strings.
These fuse links are capable of interrupting low overcurrents associated with faulted PV systems (reverse current, multi-array fault).
Available in four mounting styles for application flexibility.

Structural Characteristics

- According to IEC60269-6
- Rated current: 1-32A
- Rated voltage: DC 1500V
- Rated breaking capacity:DC 20kA
- Operating class gPV for Solar protection

Specifications

Pole	1P
Rated Voltage Ue (V DC)	1500
Rated Current In (A)	1,2,3,4,5,6,8,10,12,15,20,25,30,32
Biggest Block Ability(KA)	20

Connection and Installation

Connection(mm^2)	2.5-10
Working Temperature(°C)	-30~+70
Resistance And Damp Hot	Class 2
Altitude(m)	≤ 2000
Relative Humidity	≤ 95%
Protection Class/Degree	IP20
Pollution	3
Installation Environment	No obvious shock and vibration
Installation Class/Type	Class III/DIN rail

PV fuse Description

- Specifically designed to provide fast-acting protection under low fault current conditions associated with PV systems.
- Variety of mounting options for flexibility.
- Fuses meet IEC photovoltaic standards for global product acceptance.
- Low watts loss for greater PV system efficiency.
- Low heat rise permits more precise sizing.
- In-line crimp terminal version is easy to apply in wire harness construction.

SNPV-32 1500V

SOLAR DC 1500V FUSE

Dimensions

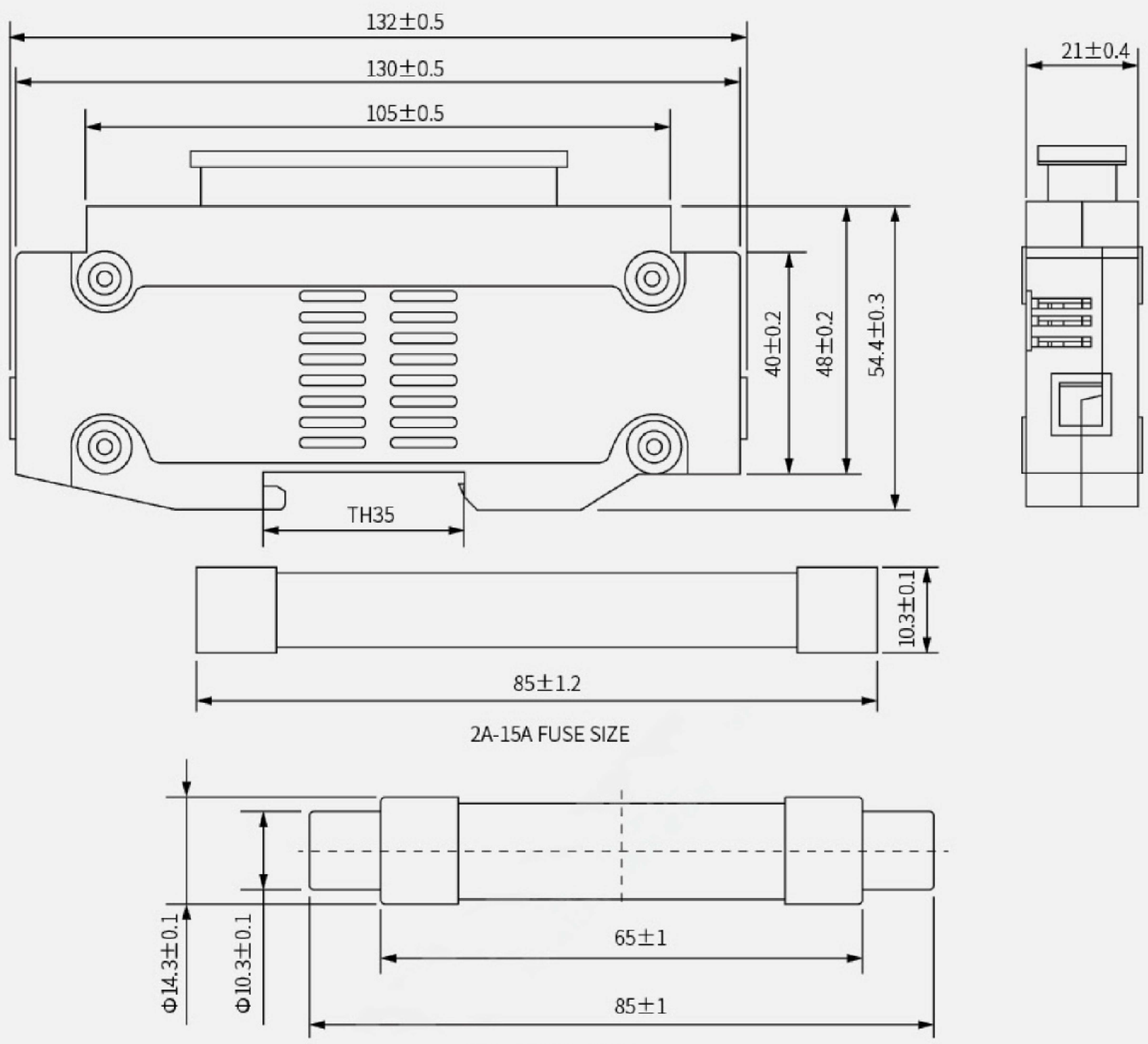

Characteristic Curve

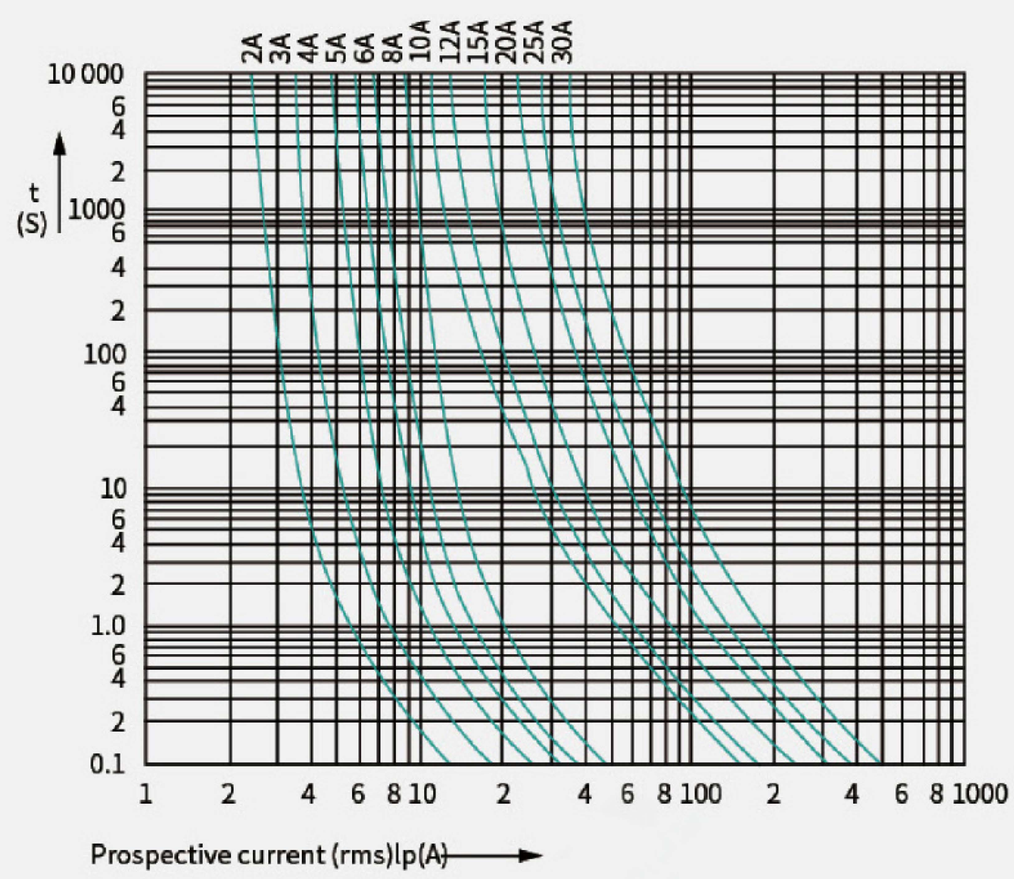

SNPV-160 1000V

SOLAR DC FUSE

SUNNOM

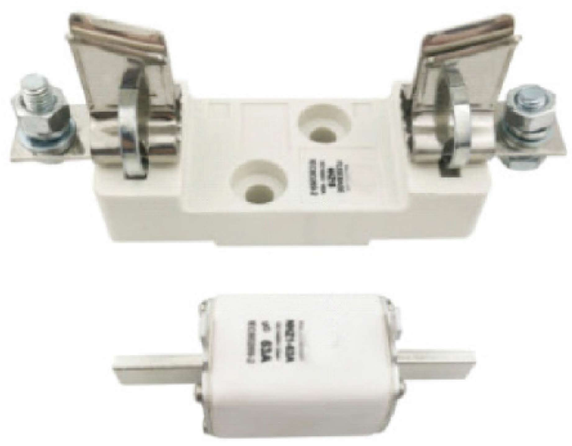

Application

Fuse features light in weight, small in size, low in power loss and high in breaking capacity. This product has been widely used in overload and short circuit protection of electric installation. This product conforms to ICE 60269 standard with all of the rating at the world advanced level.

Structural Characteristics

- According to IEC60269-6
- Rated current: 40-160A
- Rated voltage: DC 1000V
- Rated breaking capacity:DC 50kA
- Operating class gPV for Solar protection
- See Model of product:NH00

Specifications

Rated Voltage Ue (V DC)	1000
Rated Current In (A)	40,50,63,80,100,125,160
Biggest Block Ability(KA)	50

Electrical Characteristics

Rating	Blowing Time	
	1.13In	1.45In
In≤ 60	1 hour Min	1 hour Max
63< In ≤160	2 hour Min	2 hour Max

Dimensions

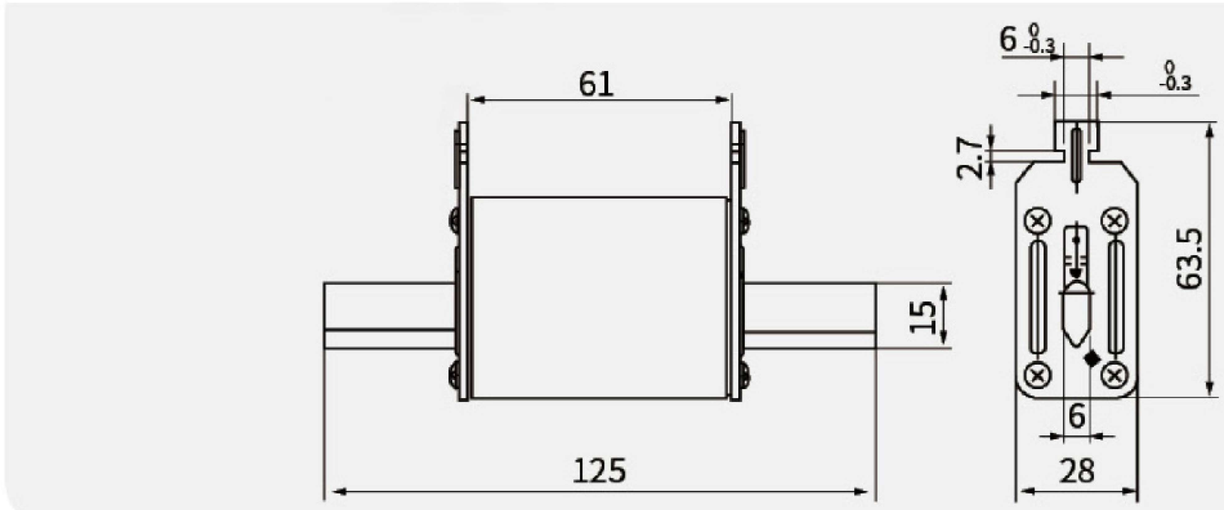

Characteristic Curve

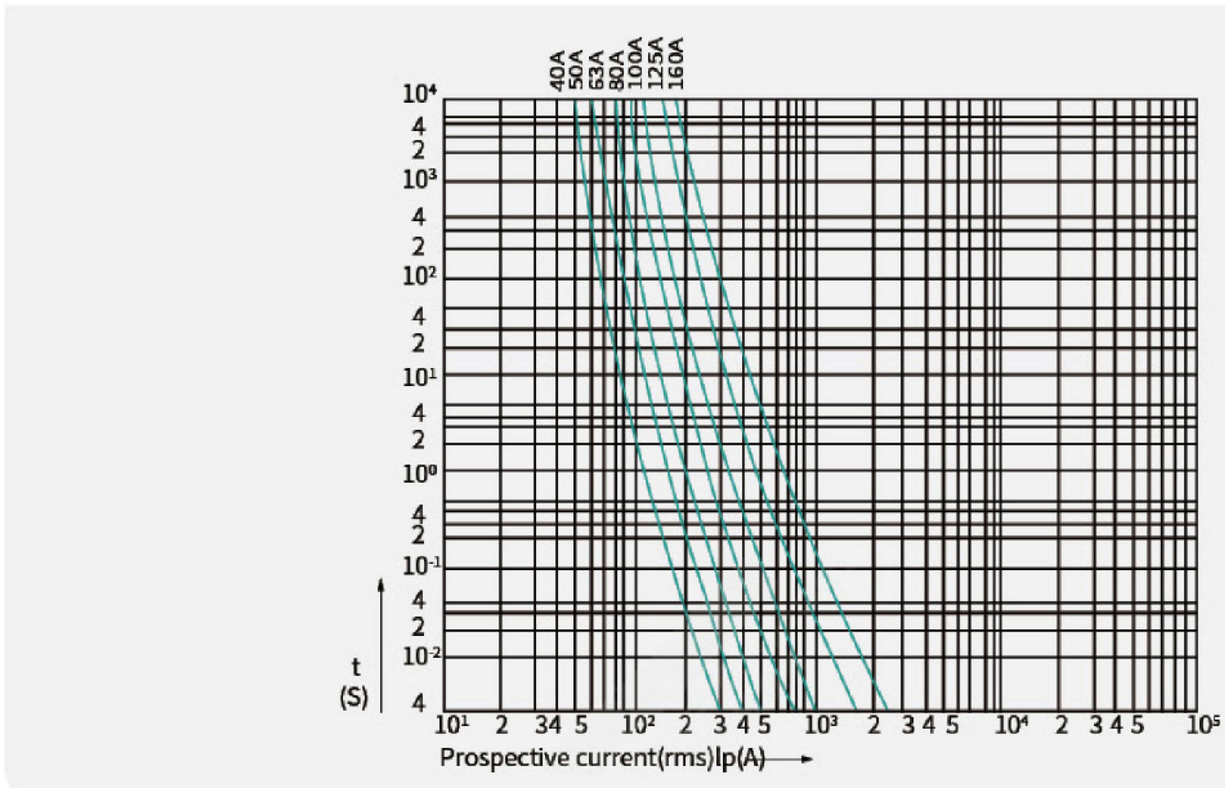

SUNNOM

SNPV-250 1000V

SOLAR DC FUSE

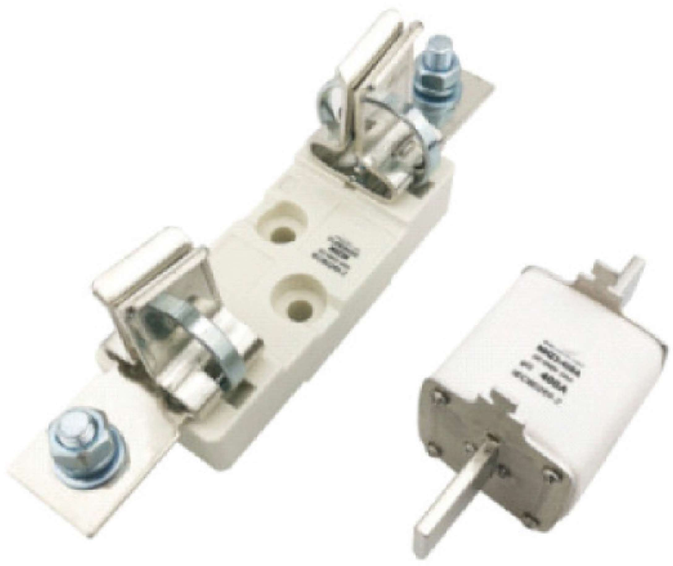

Application

Fuse features light in weight, small in size, low in power loss and high in breaking capacity. This product has been widely used in overload and short circuit protection of electric installation. This product conforms to ICE 60269 standard with all of the rating at the world advanced level.

Structural Characteristics

- According to IEC60269-6
- Rated current: 180A-200A
- Rated voltage: DC 1000V
- Rated breaking capacity:DC 50kA
- Operating class gPV for Solar protection
- See Model of product:NH1

Specifications

Rated Voltage Ue (V DC)	1000
Rated Current In (A)	180,200
Biggest Block Ability(KA)	50

Electrical Characteristics

Rating	Blowing Time	
	1.13In	1.45In
In≤ 60	1 hour Min	1 hour Max
63< In ≤160	2 hour Min	2 hour Max

Dimensions

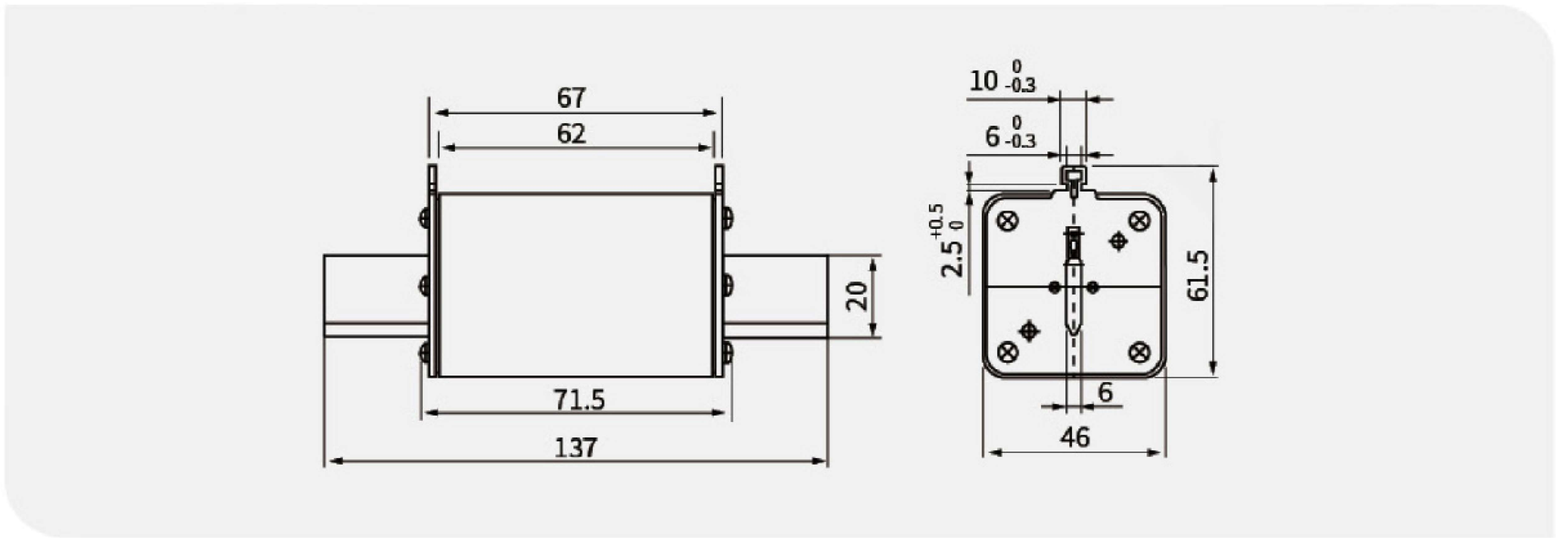

Characteristic Curve

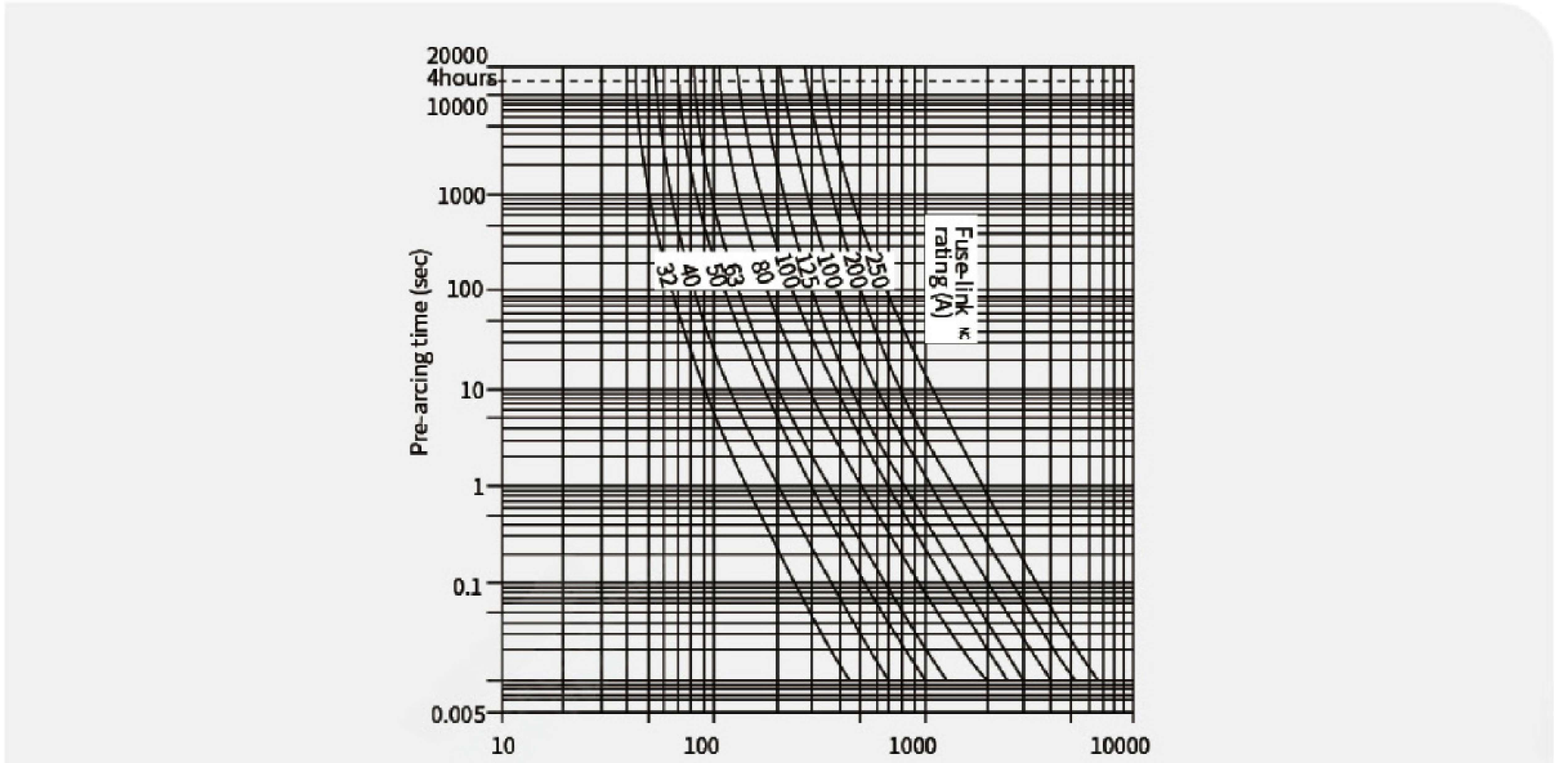

SNPV-400 1000V
SOLAR DC FUSE

SUNNOM

Application

Fuse features light in weight, small in size, low in power loss and high in breaking capacity. This product has been widely used in overload and short circuit protection of electric installation. This product conforms to ICE 60269 standard with all of the rating at the world advanced level.

Structural Characteristics

- According to IEC60269-6
- Rated current: 215A-400A
- Rated voltage: DC 1000V
- Rated breaking capacity:DC 50kA
- Operating class gPV for Solar protection
- See Model of product:NH2

Specifications

Rated Voltage Ue (V DC)	1000
Rated Current In (A)	215,250,300,315,400
Biggest Block Ability(KA)	50

Electrical Characteristics

Rating	Conventional Time(h)	Conventional Current	
		Conventional Non-Fusing Current(A)	Conventional Fusing Current(A)
In≤ 60	2	1 hour Min	1 hour Max
63< In ≤160	3	2 hour Min	2 hour Max

Dimensions

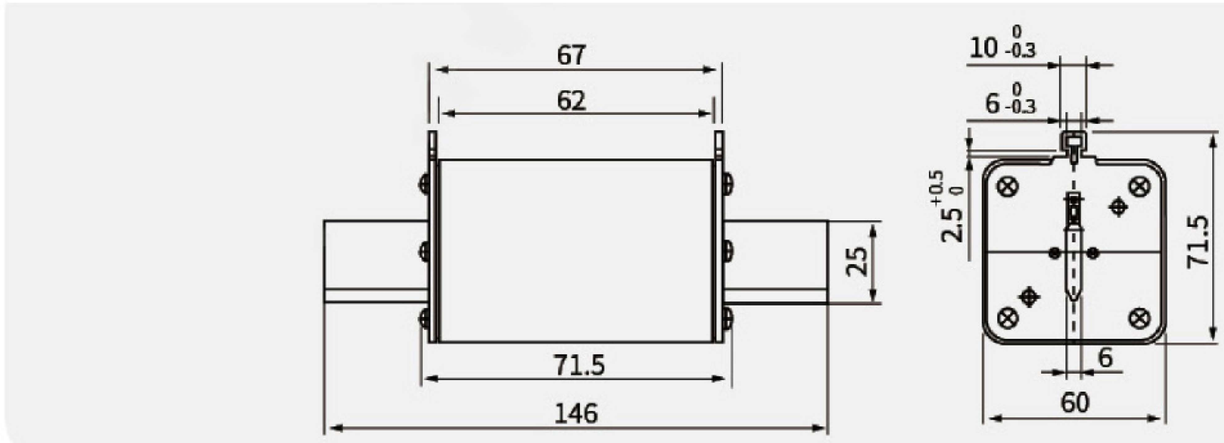

Characteristic Curve

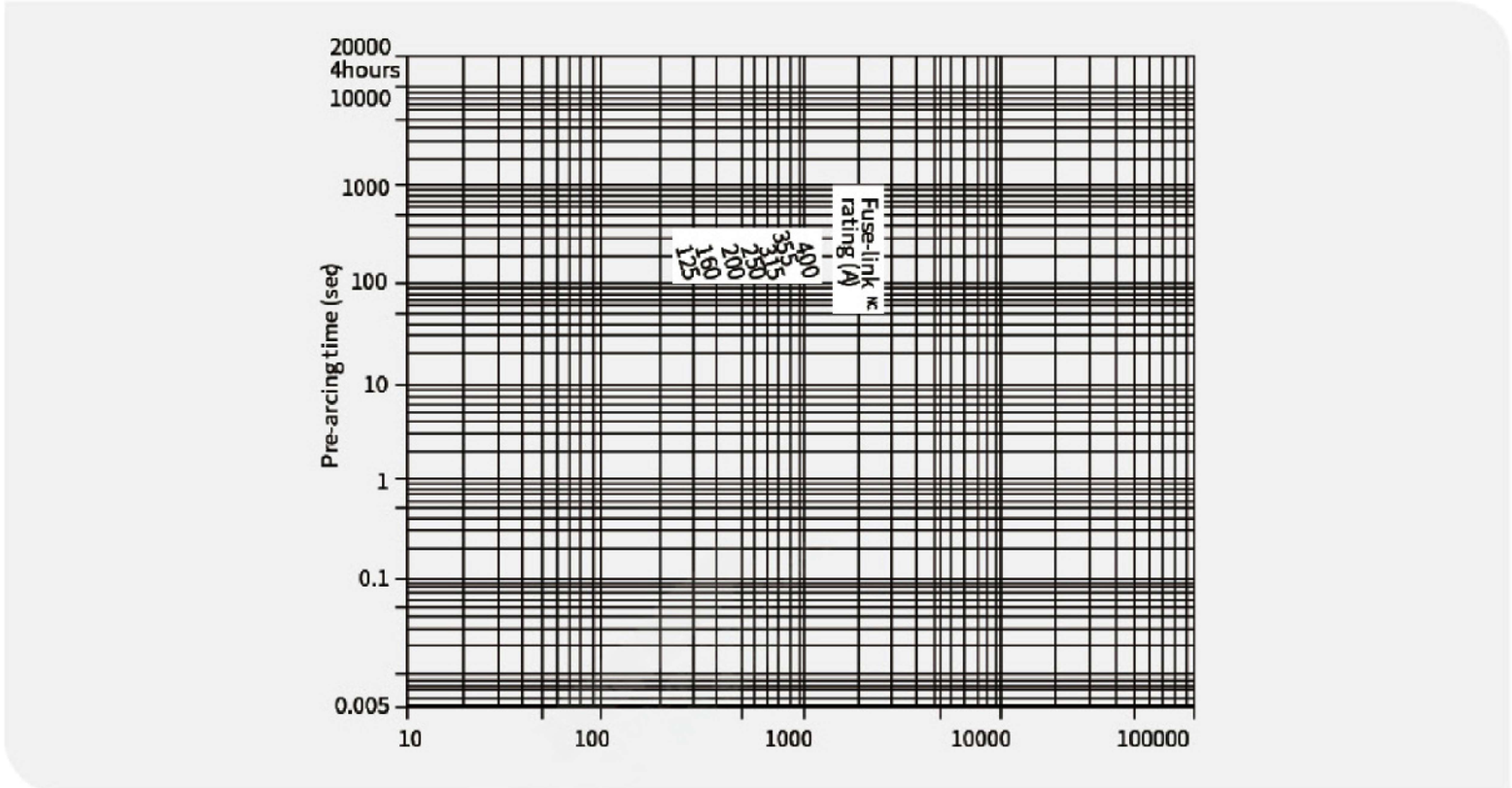

SUNNOM

SNPV-630 1000V

SOLAR DC FUSE

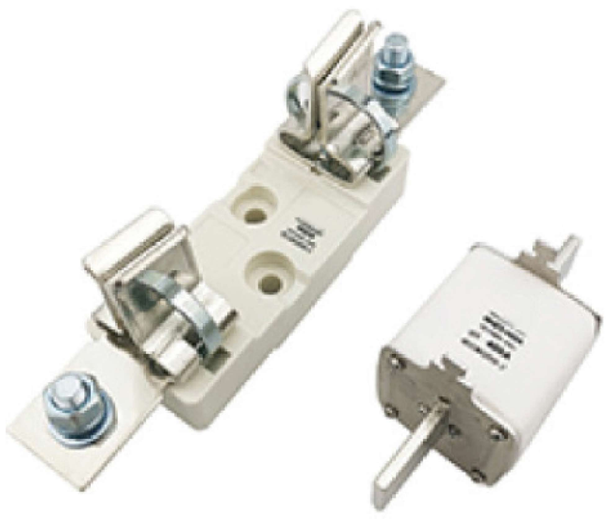

Application

Fuse features light in weight, small in size, low in power loss and high in breaking capacity. This product has been widely used in overload and short circuit protection of electric installation. This product conforms to ICE 60269 standard with all of the rating at the world advanced level.

Structural Characteristics

- According to IEC60269-6
- Rated current: 415A-630A
- Rated voltage: DC 1000V
- Rated breaking capacity: DC 50kA
- Operating class gPV for Solar protection

Specifications

Rated Voltage Ue (V DC)	1000
Rated Current In (A)	415,500,630
Biggest Block Ability(KA)	50

Dimensions

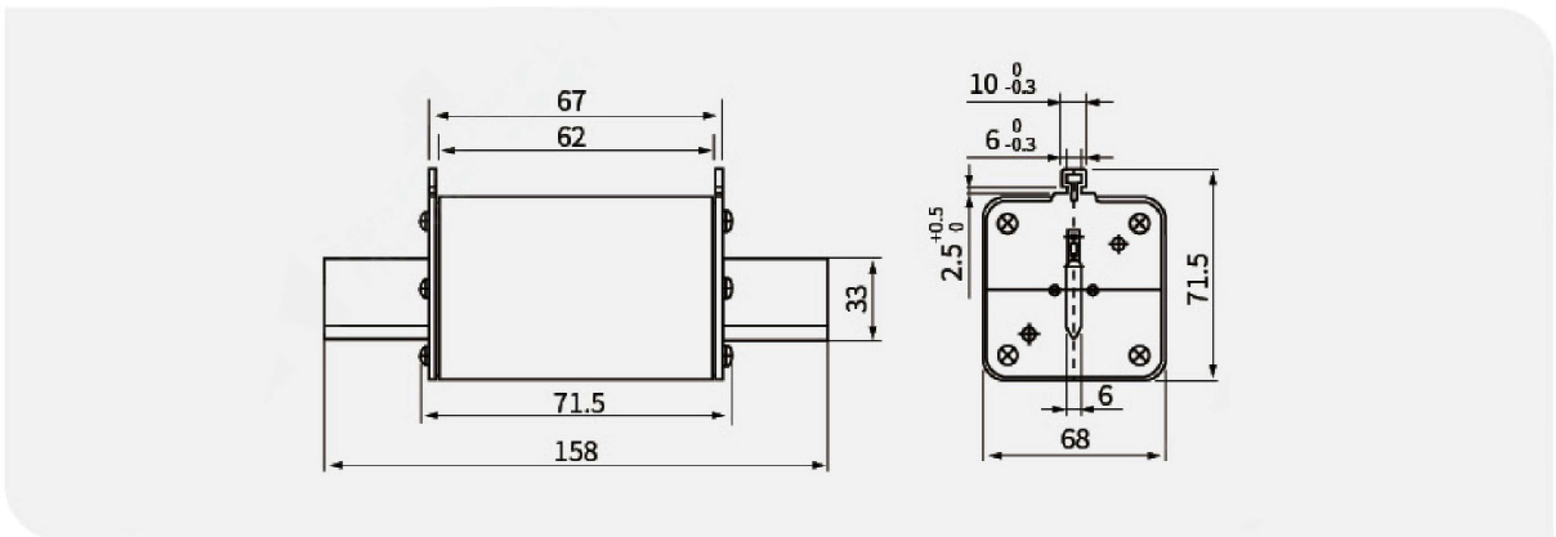
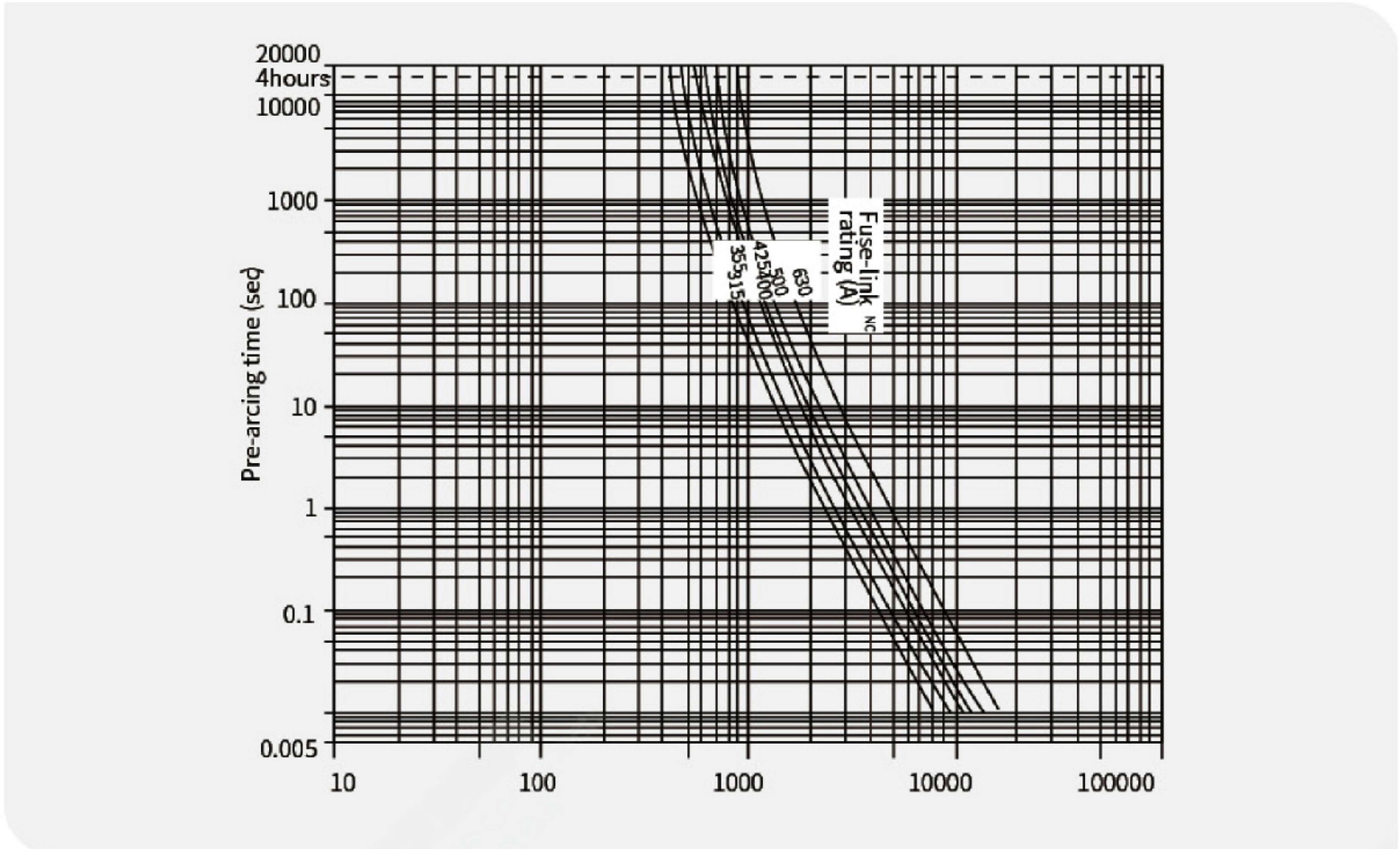
Characteristic Curve