Electric board for small and medium size cold storage

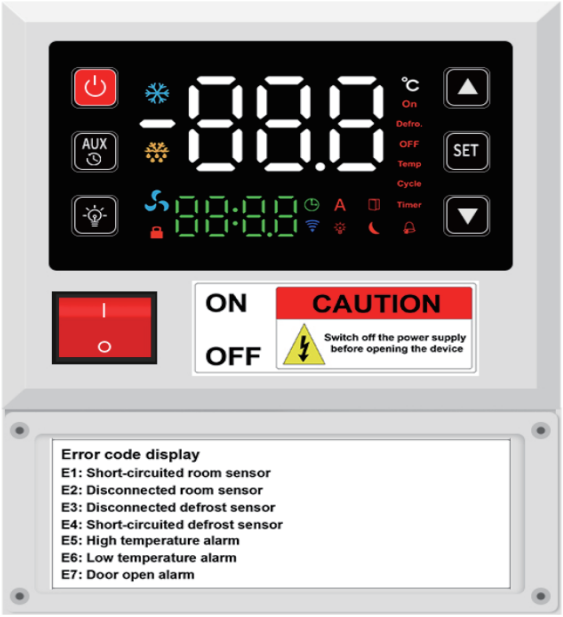

General descriptions:

ECB-1000Q is widely used for the small and medium size cold storage, with the function of refrigeration, defrost, fan, light control, alarm and time display.

Features

- Super-Big display area shows all necessary information
- Directly controls heavy loads with up to 3HP relay
- Icon LEDs status display
- Password Protection avoids accidental tampering by personnel
- Real-Time-Clock really schedules and fixes defrost time
- Defrost force function
- Energy save function at night

Technical parameters:

Power Supply: 100~265VAC,50/60Hz Power C onsumption: Less than 5W

Temperature Measuring Range: -45℃～99℃ Accuracy: ±1℃

Temperature Controlling Range -40℃～90℃ Resolution: 0.1℃/1℃ or 1F

Relay Capacity of Compressor:

Compressor	50A/240VAC	Max. capacity of controlling the compressor: 3P
Defrost	8A/220VAC	
Fan	5A/220VAC	Max. capacity of controlling the fan: 500W
Light	5A/220VAC	Max. capacity of controlling the light: 300W

Alarm 5A/220VAC

Storage Temperature: -20℃～75℃ Work Temperature: -5℃～60℃

Sensor Type: NTC(10K / 25℃,B-3435K)

Introduction of indicator light

Refrigeration On: Refrigerating Flash: Refrigeration delay Off: Refrigeration stop

Fan On: Fan working Off: Fan stop

Light On: Light on Off: Light off

Defrost On: Defrosting Off: Defrost stop

Alarm On: System alarm Off: No alarm

Energy conservation On: Energy saving mode of night Off: Normal mode

Parameter list

Parameter C					
	Parameter	Introduction	Range	Default Value	
1	C01	Differential	(0.1 ... 20.0) K	2.0	
2	C02	Max set point limit	(C03 ... 100)℃	100.0	
3	C03	Min set point limit	(-50.0 ...C02)℃	-50.0	
4	C04	Min. ON-time	(0 ...15)Min	0	
5	C05	Min. OFF-time	(0 ...15)Min	0	
6	C06	Temperature calibration	(-12.0...12.0)℃	0.0	
7	C07	Compressor On delay after Power On	(0 ...30)Min	2	
8	C08	Night-Saving Function(0: On, 1: Off)	(0 ...1)	1	
9	C09	Night-time start hour	(0 ...23)hour	22	
10	C10	Night-time start minute	(0 ...59)min	0	
11	C11	Night-time close hour	(0 ...23)hour	8	
12	C12	Night-time close minute	(0 ...59)min	0	
13	C13	Night set back differential	(0 ...10)K	2	
Parameter A					
14	A01	High temperature alarm(tem.+C01+A01)	(0 ...30)K	10	
15	A02	Low temperature alarm(tem.-A02)	(0 ...30)K	10	
16	A03	Alarm differential	(1...10)K	2	
17	A04	Alarm time delay	(0 ...99)min	30	
18	A05	Alarm time delay after defrost end and power-on	(0 ...99)min	20	
19	A06	Buzzer keeps silent when alarm occurs(0: On, 1: Off)	(0 ...1)	0	
20	A07	Door open alarm time delay	(0 ...99)min	30	
Parameter D					
21	d01	Defrost type (0:electric heating defrosting; 1. thermal defrosting)	(0 ...1)	0	
22	d02	Defrost end function (0: temperature	(0 ...1)	0	

		sensor termination, 1: defrost time termination)			
23	d03	Defrost stop temperature (if d02=0)	(0...99)℃	8	
24	d04	Defrost interval time	(0 ...48)hour	6	
25	d05	Max-defrost duration	(0 ...99)min	30	
26	d06	Dripping time	(0 ...20)min	2	
27	d07	First defrost delay after power-on	(0 ...99)min	0	
28	d08	Max-times of defrost every day (if 003=1)	(0 ...7)	0	
29	d09	Defrost sensor calibration	(-12.0...12.0)℃	0	
		Parameter F			
30	F01	Fan operation function (0:Always on; 1:Parallel to compressor)	(0 ...1)	0	
31	F02	Fan operation during defrost (0:Yes; 1:No)	(0 ...1)	0	
32	F03	Fan start temperature after defrost	(-30...5)℃	5	
33	F04	Fan start-up delay after defrost	(0 ...10)min	3	
		Parameter O			
34	o01	Sensor error, compressor protection time (0:On, 1:Off)	(0 ...1)	0	
35	o02	Access Password	(0 ...999)	0	
36	o03	Defrost start mode(0:by Internal timer; 1:by Real Time Clock Module)	(0...1)	0	
37	o04	Display decimal(0:Yes; 1:No)	(0 ...1)	0	
38	o05	Digital input definition (0:None; 1-4:Door switch)	(0 ...4)	0	
39	o06	Temperature display in ℃ or ℉ (0:℃; 1:℉)	(0 ...1)	0	
		Parameter T			
40	t01	1st defrost start hour	(0 ...23)hour	0	
41	t02	1st defrost start minute	(0 ...59)min	0	
42	t03	2nd defrost start hour	(0 ...23)hour	0	
43	t04	2nd defrost start minute	(0 ...59)min	0	
44	t05	3rd defrost start hour	(0 ...23)hour	0	
45	t06	3rd defrost start minute	(0 ...59)min	0	
46	t07	4th defrost start hour	(0 ...23)hour	0	
47	t08	4th defrost start minute	(0 ...59)min	0	
48	t09	5th defrost start hour	(0 ...23)hour	0	
49	t10	5th defrost start minute	(0 ...59)min	0	
50	t11	6th defrost start hour	(0 ...23)hour	0	
51	t12	6th defrost start minute	(0 ...59)min	0	
52	t13	7th defrost start hour	(0 ...23)hour	0	
53	t14	7th defrost start minute	(0 ...59)min	0	

Error code display				
E1	**Short-circuited room sensor**			
E2	**Disconnected room sensor**			
E3	**Disconnected defrost sensor**			
E4	**Short-circuited defrost sensor**			
E5	**High temperature alarm**			
E6	**Low temperature alarm**			
E7	**Door open alarm**			

Parameter Description

c-Temperature Control Parameters Group

C01-Differential

This is the difference between the temperature at which the cooling output is switched off and the temperature at which the output is switched on. This is an absolute value related to the set point. It switched on when temperature goes over set point temperature +C01, and is turned off when the temperature decreases to set point temperature.

C02-Max set point limit

The set point value cannot be adjusted outside the limits defined by these parameters to avoid improper set point setting by the user

C03-Min set point limit

The set point value cannot be adjusted outside the limits defined by these parameters to avoid improper set point setting by the user

C04-Min.ON-time

The value that you set is for how long the cooling is to run once it has been started

C05-Min.OFF-time (anti short cycle)

The value is the minimum time between two subsequent switches on of the output

C06- Temperature calibration

Correct of the sensor error. Display temperature equal to measuring temperature of the actual value and the numerical C06.

C07-Compressor On delay after Power On

This value is designed for avoiding cooling output is switched on immediately when controller gets power, it should be power on after C07

C08-Night-Saving Function

This parameter determines the Night-Saving function on or not

C09-Night-time start hour

This value determines the time in Hour for the beginning of night-time
C10-Night-time start minute
This value determines the time in Minute for the beginning of night-time
C11-Night-time close hour
This value determines the time in Hour for the end of night-time
C12-Night-time close minute
This value determines the time in Minute for the end of night-time
C13-Night set back differential
This value is designed to raise the temperature setting during night-time period in order to save energy

A-Alarm Parameter Group

A01-High temperature alarm
High temperature alarm value relative to set point
E.g. If your set point is at 4, differential C01=2, and A01=5, the alarm will be triggered at 11
A02-Low temperature alarm
Low temperature alarm value relative to set point
E.g. If your set point is at 4, and A02=3, it will be triggered at l and cancel at 4
A03-Alarm differential
Useful to avoid alarm oscillation
Example: Set point=4, C01=2, A01=6, A03=2; In this case when the cold room temperature exceeds 4+C01+A01 = 4+2+6=12 for a time greater than parameter A04 the alarm is activated when temperature drops below 4+C01+A01-A0 = 4+2+6-2=10, the alarm is reset
A04-Alarm time delay
Delay between the detection of the temperature alarm and the activation of the alarm sequences. This is useful to prevent temporary conditions from causing an alarm
A05-Alarm time delay after defrost end and power-on
Time the controller should automatically ignore the temperature alarm condition after defrost end and power-on
A06-Buzzer keeps silent when alarm occurs
You can select audible alarm by this parameter
A07-Door open alarm time delay (if O05>0)
Delay between the detection of the door opens and the activation of the alarm sequences. This is very useful to prevent cold room losing efficiency if the door is not closed completely

d-Defrost Parameter Group

d01-Defrost type
Select the type of your installation and the way defrost is performed
0:electric heating defrosting; 1. thermal defrosting)
d02-Defrost end function
Select the defrost termination type by temperature or by time
d03-Defrost stop temperature
This parameter determines the achieve temperature to stop defrost
d04-Defrost interval time
This is the time between two subsequent defrost cycles. This timer will initiate every defrost cycle

d05-Max-defrost duration

The defrost cycle will stop after this time even if the defrost end temperature has not been reached

d06-Dripping time

After defrost is terminated the compressor or cooling valve is stopped to allow the evaporator to drip

d07-First defrost delay after power-on

This parameter allows to delay a defrost cycle after power-on. This will prevent a cycle from occurring before the cold room has reached its operations temperature

dO8-Max-times of defrost every day(if 003=1)

This parameter defines how many times is needed for fixed defrost by RTC each day

d09-Defrost sensor calibration

Correct the sensor error. Display temperature equal to measuring temperature of the actual value plus d09 value

F-Fan Control Parameter Group

F01-Fan operation function

This parameter determines the fan work mode

F02-Fan operation during defrost

This parameter determines the fan work or not during defrosts

F03-Fan start temperature after defrost

This parameter determines the temperature when the fan start work after defrost

F04-Fan start-up delay after defrost

This parameter determines the delay time of fan then it work after defrost

o-Other Parameter Group

o01- Sensor error, compressor protection time

This parameter determines when the sensor error occurs, compressor turns on/off with proportional time

o02-Access Password

This allows to protect all the setting in the controller by an access code

o03-Defrost start mode

This parameter allows you to choose defrost start mode

o04-Display decimal

This parameter allows you to choose temperature display with or without decimal

o05-Digital input definition

None or Door Switch

When door opens-evaporator's fan stops automatically

When door closes-evaporator's fan runs automatically

o06-Temperature display in ℃ or ℉

This parameter determines displayed temperature in ℃ or ℉

o07-Digital input polarity

0:activated by closing the contact; 1:atcivated by opening the contact;

t-Time schedule of defrost by Real Time Clock

t01-1st defrost start hour

This value determines the time in Hour of the 1st defrost generation every day

t02-1st defrost start minute

This value determines the time in Minute of the 1st defrost generation every day

t03-2nd defrost start hour
This value determines the time in Hour of the 2nd defrost generation every day
t04-2nd defrost start Minute
This value determines the time in Minute of the 2nd defrost generation every day
t05-3rd defrost start Hour
This value determines the time in Hour of the 3rd defrost generation every day
t06-3rd defrost start Minute
This value determines the time in Minute of the 3rd defrost generation every day
t07-4th defrost start Hour
This value determines the time in Hour of the 4th defrost generation every day
t08-4th defrost start Minute
This value determines the time in Minute of the 4th defrost generation every day-
t09-5th defrost start Hour
This value determines the time in Hour of the 5th defrost generation every day
t10-5th defrost start Minute
This value determines the time in Minute of the 5th defrost generation every day-
t11-6th defrost start Hour
This value determines the time in Hour of the 6th defrost generation every day
t12-6th defrost start Minute
This value determines the time in Minute of the 6th defrost generation every day
t13-7th defrost start Hour
This value determines the time in Hour of the 7th defrost generation every day
t14-7th defrost start Minute
This value determines the time in Minute of the 7th defrost generation every day

WIFI(optional)

1.Reset WIFI connection(optional)

Press and hold the "▲" and "▼" keys for more than 10 seconds, and "rFi" will be displayed for 3 seconds. At this time, you can use the app to reconnect and add devices.

2.install app

Search and install the "Smart Life" app in the mobile app store or scan the QR code to download the app:

Smart Life

After installation, open and register as a user.

3.Connect wifi

First connect your phone to WiFi (supports 2.4G, not 5G), then click the "Add Device" button in the middle of the app homepage or the "+" sign in the upper right corner, click "Add Device", and the system will automatically search for the signal sent by the thermostat WiFi module. If the thermostat is found, it will be displayed in the interface.

Then Click on the "Thermostat" icon, and a box will pop up for entering the WiFi password. At this point, enter the correct WiFi account and password, and click "Next" to add the thermostat WiFi connection.

After successful addition, click Finish to enter the temperature controller monitoring interface, where you can remotely monitor and set the temperature controller.

Configuration Chart

Set point: (no need password)

Shows current setting

SET

Adjust to proper set point

or

Save and exit

AUX

Forced defrost :(no need password)

To start defrost

>5S

Change parameter:

if o02=0, then

Enter into parameter

SET

>5S

Choose parameter group between C-A-d-F-o-t

or

Enter into specific parameter group

SET

Find a parameter you want to modify

or

Get into this parameter and shows current

SET

Adjust a new value for this parameter

or

Confirm the new setting value and save it

SET

if o02≠0, then

Display PS

SET

>5S

Enter the password

SET

Enter the password

or

Confirm the password

SET

Password correctly into the system parameter setting, password mistake returns, Enter the password

Switch ON/OFF: (no need password)

System shutdown, all output and display closed

>3S

Light control:(no need password)

Control the light ON/OFF

PRG

System power on

Time setting: (no need password)

Enter into time setting, Hours flashing

Adjust Hours

or

Hours determine, Minutes flashing

Adjust Minutes

or

Minutes determine and exit

Illustrate:

When parameters Settings, this button can be used as return or

View Defrost temperature:

Press then release, enter View defrost temperature, after four seconds, exit to the normal temperature display status, automatically

Note: When the parameter o05=1 , if the door switch is turned on, there is no effect on the compresses, and the fan stopped, light is on, the lighting controlled by the light control button; if o05=2, light is only controlled by the door switch, not controlled by the lighting control button, the compressor and fan will not be affected ; if o05 = 3, when door is open , the compressor and the fan stops, the light is controlled by the door switch not by the light button control; If o05 = 4, when the door is open, the compressor and the fan are not affected, the lights bright and also can controlled by the lighting control button .
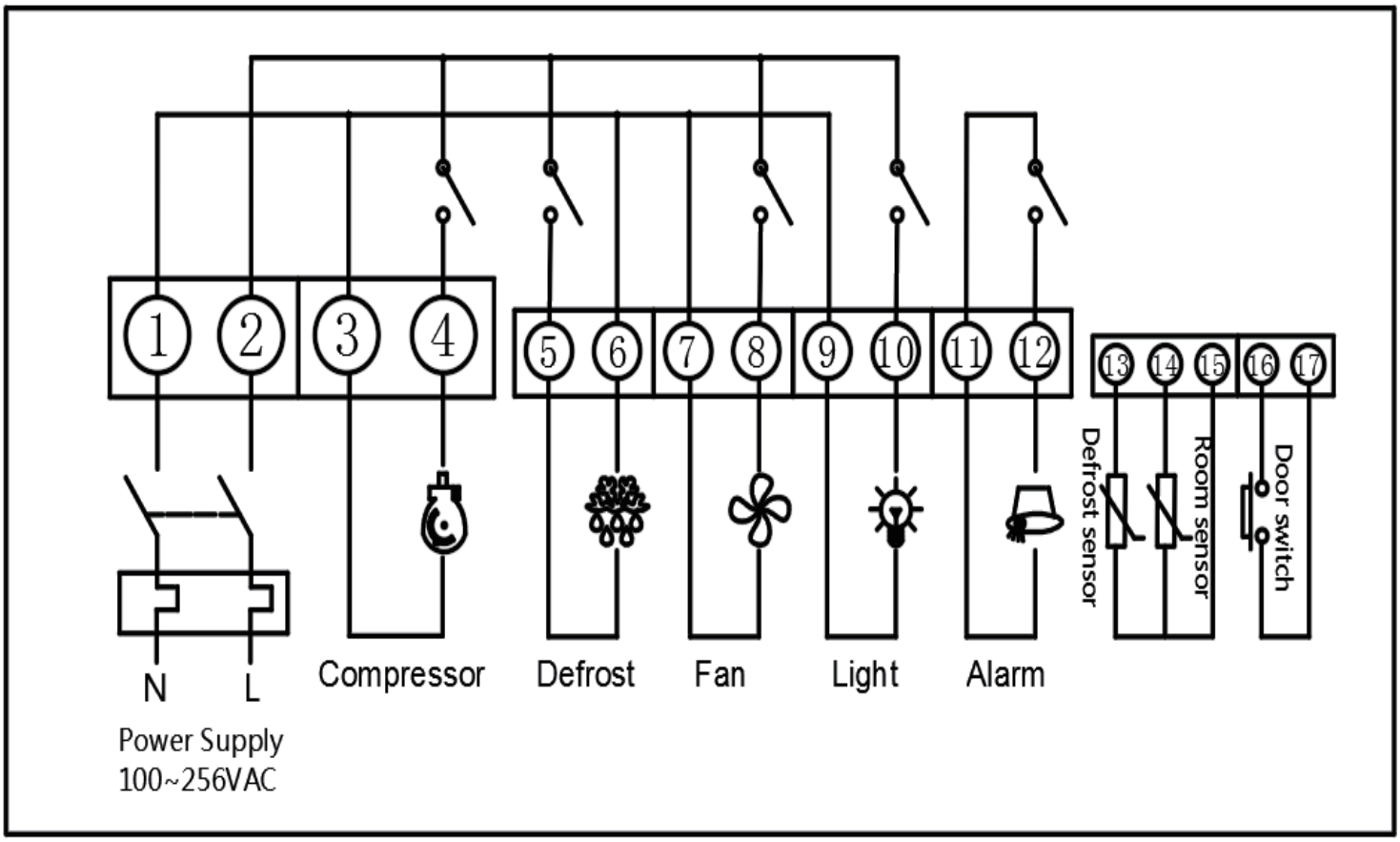
Wiring diagram