Specification

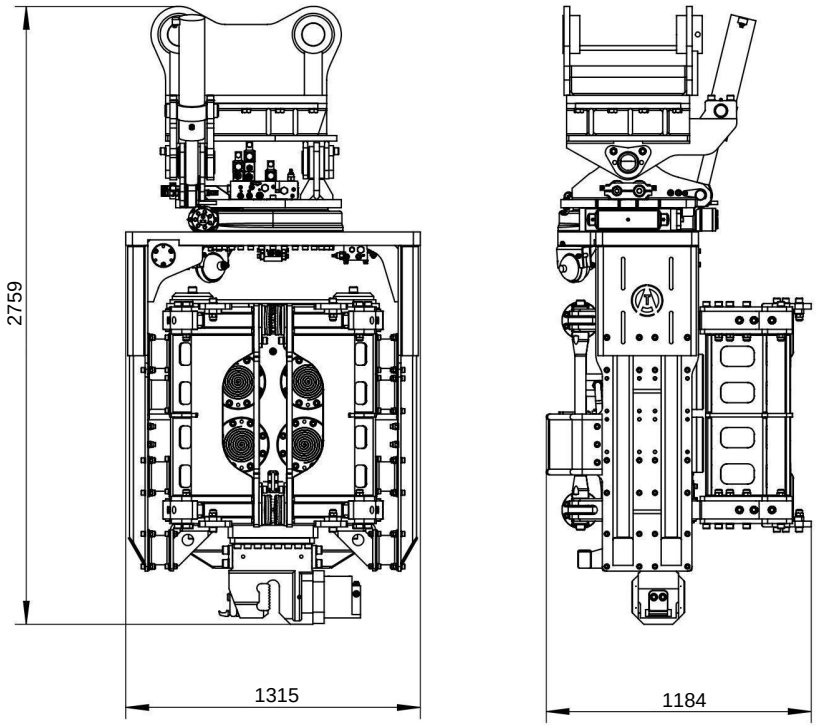

AT-75C SPECIFICATION		
Eccentric Moment	Kgm	7.5
Centrifugal force	Kn	558
Max. Centrifugal force	Kn	750
Frequency	Rpm	2400-3000
Side clamp force	Kn	1116
Bottom clamp force	Kn	650
Hydraulic system operation pressure	bar	350
Rotate/tilt degree	degree	360/+-30
Size	mm	1315*1184*2759
Weight	Kg	4000
Applicable excavator class	Ton	40-50

NOTE!

! Preliminary selection. When making the final selection excavator engine size and hydraulic system design (oil pump arrangement,oil flow rate/pressure etc) as well as soil and site conditions shall be taken into account.

! Specifications are subject to change without notice.

E-Mail:sales@atvibro.com Web:www.atvibro.com
Add.:No168,QinghongRoad, EhuTown, XishanDistrict, Wuxicity, JiangSu Province, China

Construction pictures:

*application: available range of piles

C Series Features:

1. Full hydraulic flexible control – Simple operation, 360° rotation, 30° tilt, and easy pile pickup.
2. No need to modify the excavator – Easy to install and use.
3. Suitable for limited space applications.
4. Compatible with a wide range of piles – Including sheet piles, H-piles, tubular steel piles, timber piles, etc.
5. Enhanced design for higher performance:
   *Replaceable clamp arm (compared to the B Series' integrated clamp arm).
   *4-eccentric system (upgraded from the B Series' 2-eccentric system).
   *Forced lubrication system for improved durability and efficiency.
6. Precise, safe, stable, efficient, and economical – Core components are imported from renowned brands.

E-Mail:sales@atvibro.com Web:www.atvibro.com
Add.:No168,QinghongRoad, EhuTown, XishanDistrict, Wuxicity, JiangSu Province, China