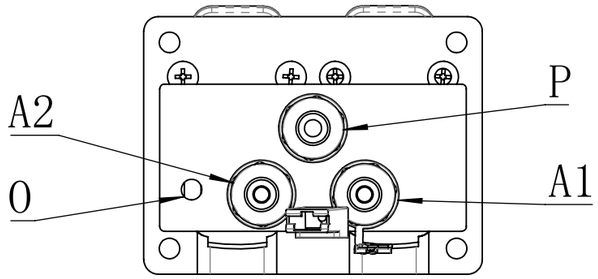

schematic diagram

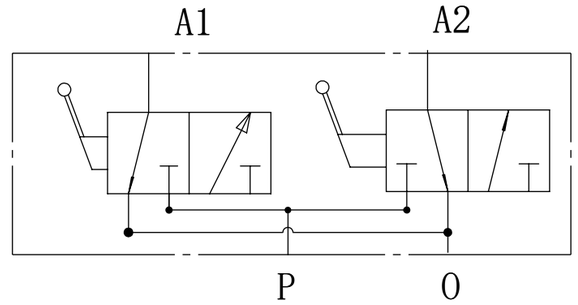

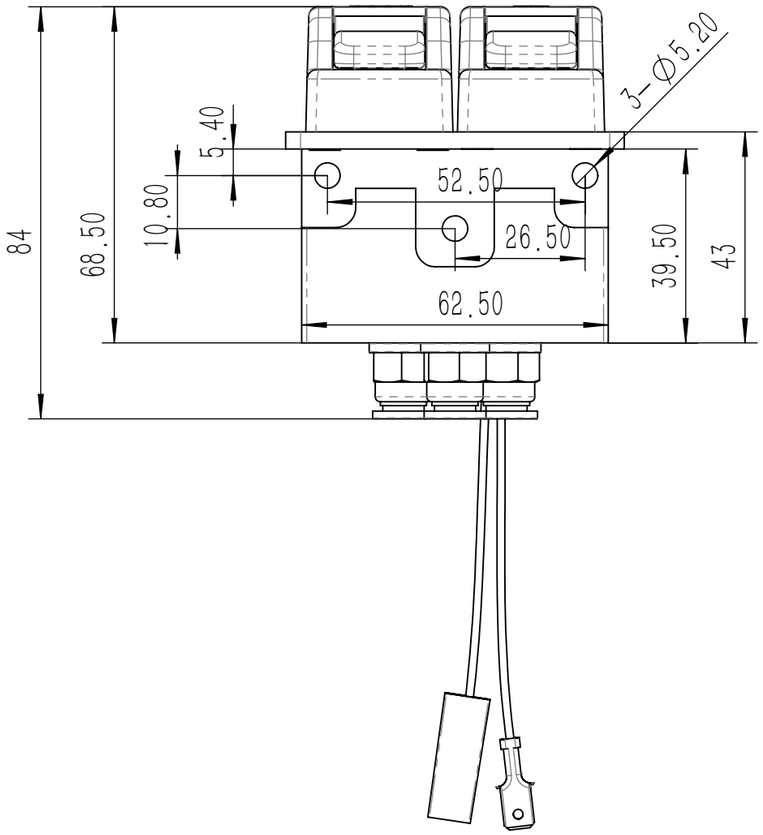

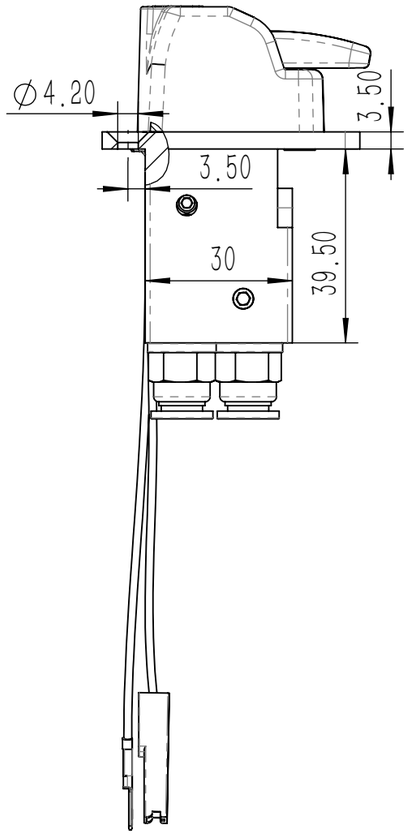

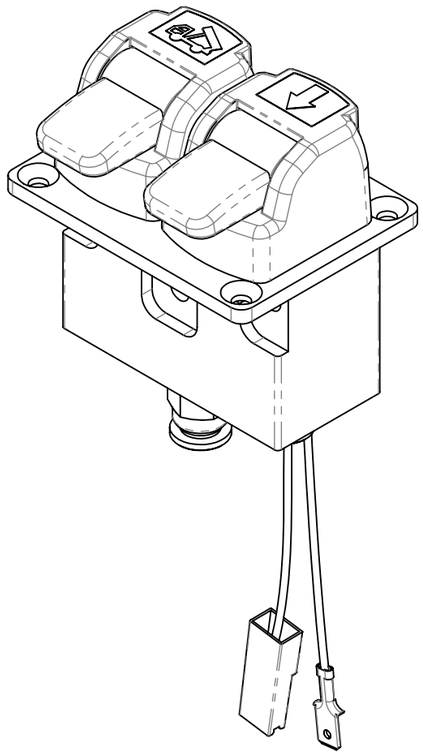

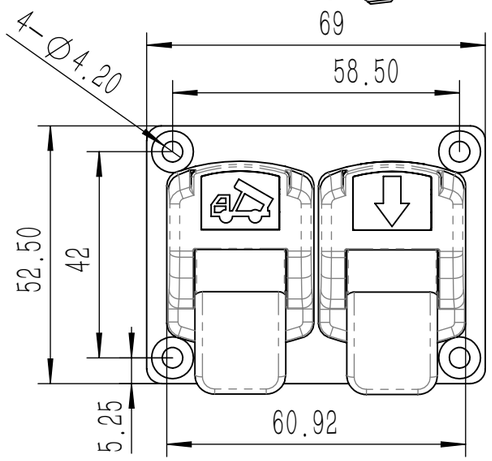

						Outline drawing		Hebei Huachun Hydraulic Auto Parts Co., Ltd
mark	punishment	partition	change file number	signature	Year Month day			Pull button to control the air valve
design			standardization			phase marker	quality / proportion	
mapping							kg / 1:1	KQFE-A-A
review			print					
workmanship			approve			1 sheet in total	The first sheet	