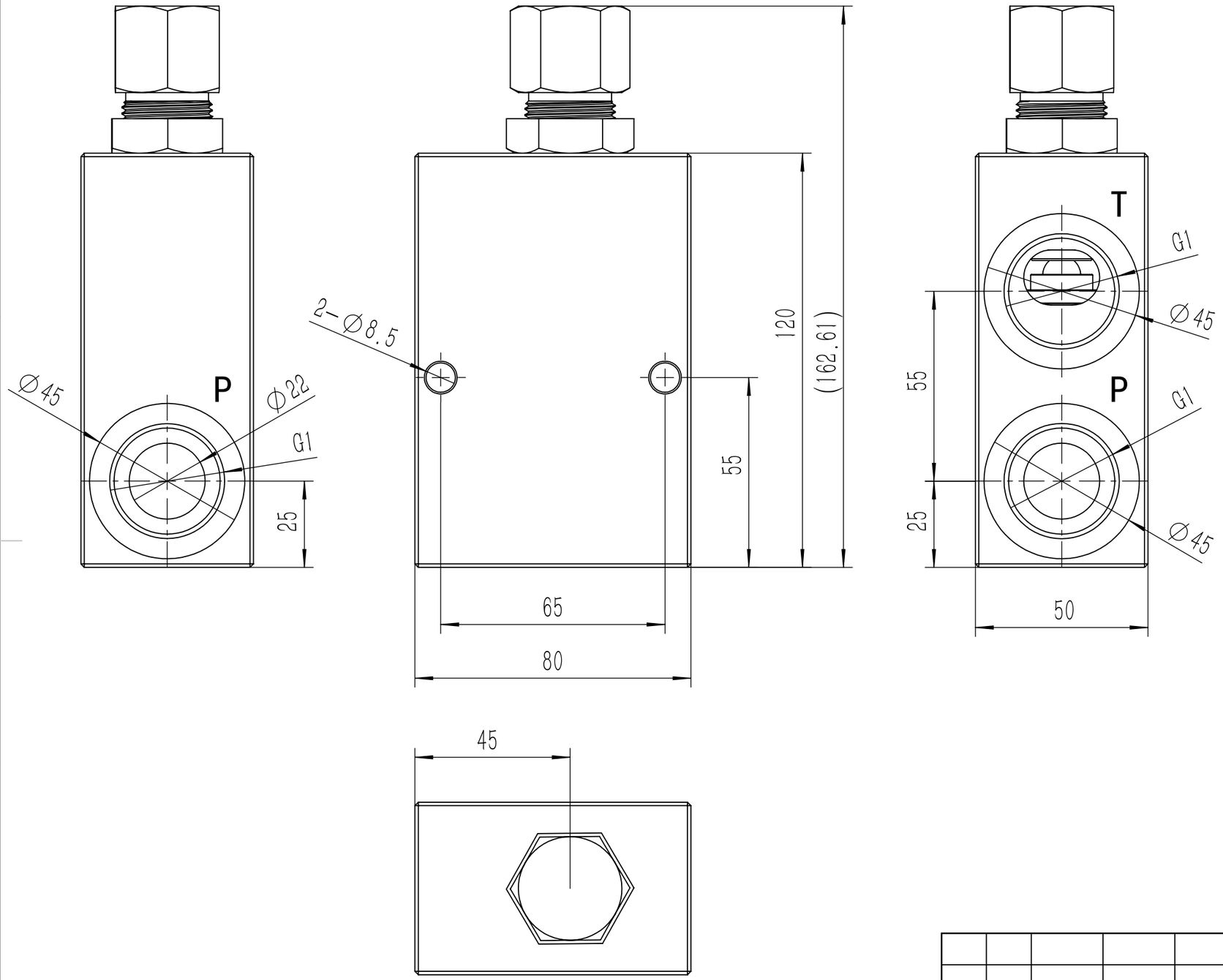

schematic diagram

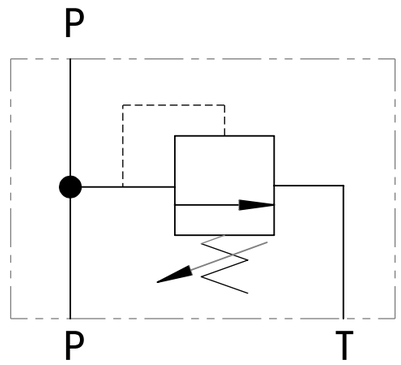

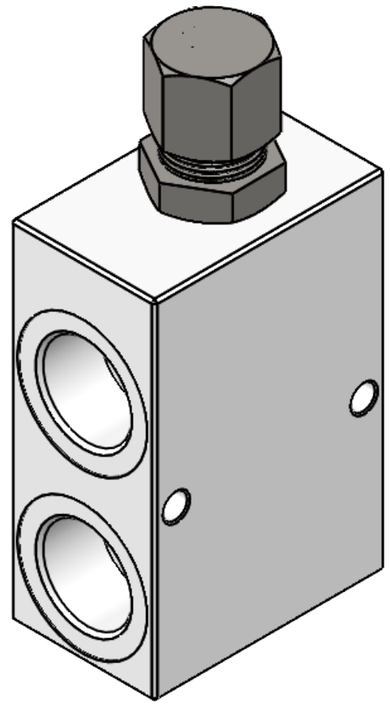

						Outline drawing			Hebei Huachun Hydraulic Auto Parts Co., Ltd
mark	punishment	partition	change file number	signature	Year Month day				Overflow valve block
design			standardization			phase marker		quality	proportion
mapping								kg	1:1
review			print						JCYL-J20L-A-A
workmanship			approve			1 sheet in total		The first sheet	