Technical Parameter Table

1	doorframe	1.2mm Galvanized sheet
2	Doorleaf	0.8mm Galvanized sheet
3	filling	48mm Honeycomb Aluminum
4	Hinge	304 Stainless Steel Hinge
5	door lock	304 Stainless steel lever handle lock
6	sweep the floor	Bottom-mounted retractable brush bar, 12mm from the ground
7	sealing strip	D-shaped polyurethane double-component seal strip for door panel
8	Viewing window	400*600 double-hung window with built-in stainless steel
9	Glass	23mm black-edged tempered glass, 3C logo, outer circle inner circle.
9	Connection method	U-shaped door frame, flush with the cover plate
10	color	RAL9002

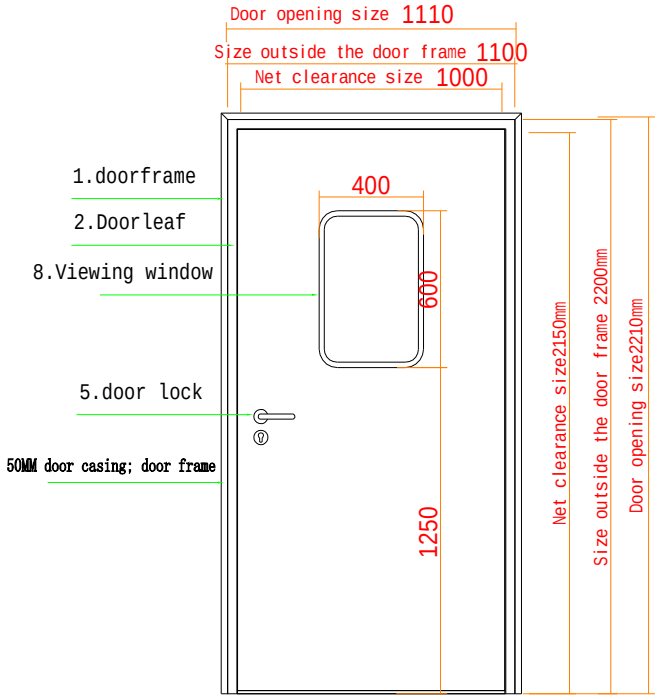

Elevation plan

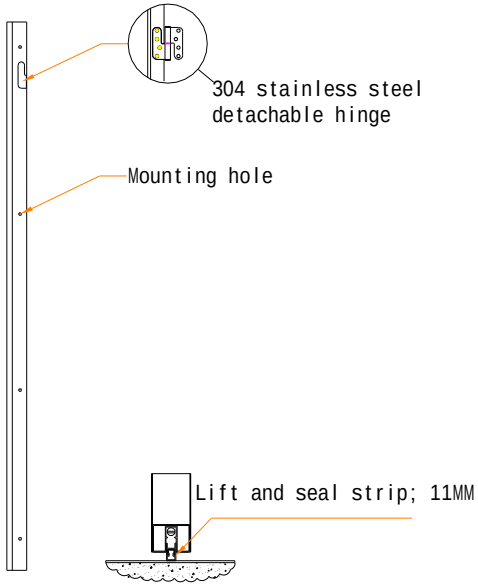

side view

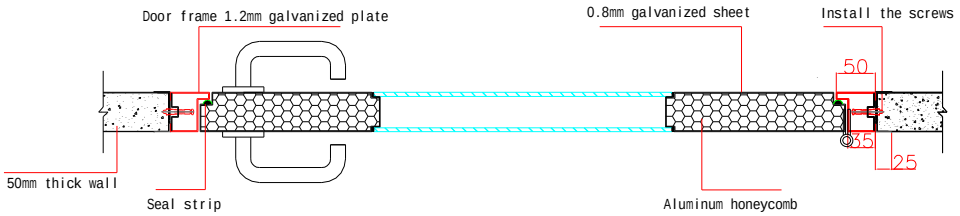

3.Right open

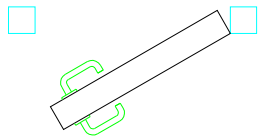

3.Right open

深圳市越玛智能科技有限公司

Shenzhen Yuema Intellingent Technology Co.,Ltd 沚

设计		校对		名称	Recessed steel cleanroom door		
审核		施工		材质			
电话	0755-89661371	传真	0755-89661831	网址	www.ymsteelcleandoor.com	日期	