一众显示科技有限公司

TEAM SOURCE DISPLAY TECH. CO, LTD.

TFT-LCD Module Specification

Module NO.： TST035WVHS-110

Version： V1.0

☐ APPROVAL FOR SPECIFICATION ☐ APPROVAL FOR SAMPLE

For Customer’s Acceptance：	
Approved by	Comment

Team Source Display：		
Presented by	Reviewed by	Approved by

Version No.	Date	Content	Remark
V1.0	2023-04-18	Initial Release	

CONTENTS

1 GENERAL CHARACTERISTICS ..... - 3 -

2 PRODUCT DRAWINGS ..... - 4 -

3 INTERFACE DESCRIPTION ..... - 5 -

4 RGB TIMING CHARACTERISTICS ..... - 6 -

4.1 SYNC MODE ..... - 6 -
4.2 DE MODE ..... - 7 -

5 ABSOLUTE MAXIMUM RATINGS ..... - 8 -

6 ELECTRICAL CHARACTERISTICS ..... - 8 -

7 BACKLIGHT CHARACTERISTICS ..... - 8 -

8 LCD OPTICAL SPECIFICATIONS ..... - 9 -

9 RELIABILITY TEST ..... - 11 -

10 IMAGE STICKING ..... - 11 -

10.1 WHAT IS IMAGE STICKING? ..... - 11 -
10.2 WHAT CAUSE IMAGE STICKING? ..... - 12 -
10.3 HOW TO AVOID IMAGE STICKING? ..... - 12 -
10.4 HOW TO FIX THE IMAGE STICKING? ..... - 12 -
10.5 IS IMAGE STICKING COVERED BY TSD WARRANTY? ..... - 13 -

11 SUGGESTIONS FOR USING LCD MODULES ..... - 13 -

11.1 HANDLING OF LCM ..... - 13 -
11.2 STORAGE ..... - 14 -

12 LIMITED WARRANTY ..... - 14 -

12.1 ..... - 14 -
12.2 ..... - 14 -
12.3 ..... - 14 -

1 General Characteristics

ITEM	Specification	Unit
LCD Type	a-Si TFT,Transmissive,Normally black,IPS	-
LCD Size	3.54	inch
Resolution (W x H)	800 x (RGB) × 640	pixel
LCM size	97.6(W) x 83.79(H) x 4.04(D)	mm
Active Area	90x72	mm
Pixel Pitch	0.1125(H)x0.1125(V)	mm
Viewing Direction	all o'clock	-
Gray Scale Inversion Direction	all o'clock	-
Viewing Angle	Top:80,Bottom:80; Left/ Right:80	deg.
Color Depth	16.7M	-
Pixel Arrangement	RGB-stripe	-
Backlight Type	12 LEDs，70mA	-
Surface Luminance	1000	cd/m2
Surface Treatment	-	-
Driver IC	FL5892C	-
Interface Type	RGB	-
Input Voltage	2.8~3.3	V
With/Without TP	Without	-
Weight	TBD	g

Note 1: RoHS compliant

Note 2: LCM weight tolerance: ± 5%.

2 Product drawings

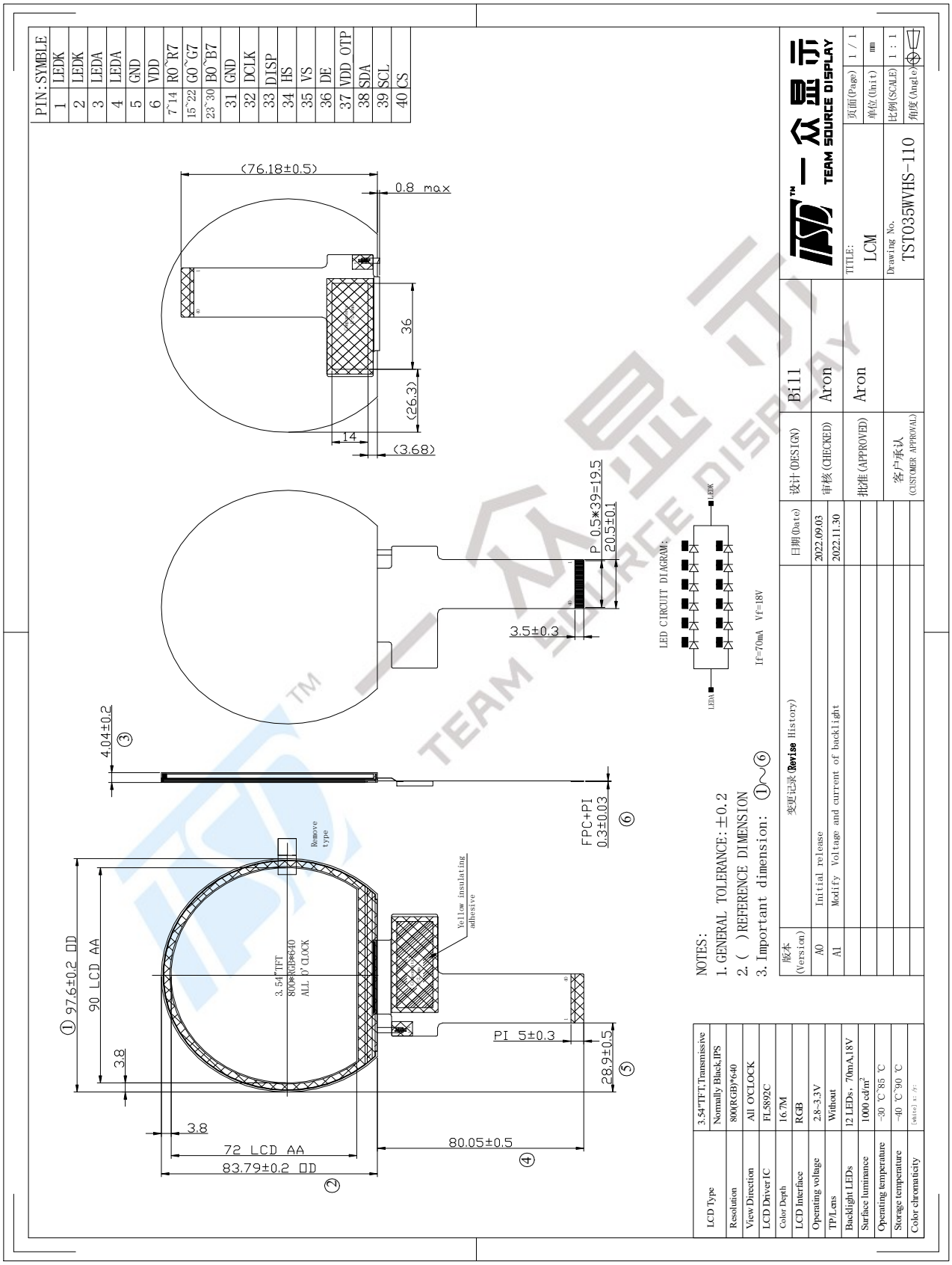

3 Interface description

引脚(PIN)	符号(symbol)	描述(description)
1	LEDK	Backlight K Cathode input pin.
2	LEDK	Backlight K Cathode input pin.
3	LEDA	Backlight A Aothod input pin.
4	LEDA	Backlight A Aothod input pin.
5	GND	System Ground. (0V)
6	VDD	Power supply +2.8~3.3V
7~14	R0~R7	Red data
15~22	G0~G7	Green data
23~30	B0~B7	Blue data
31	GND	System Ground. (0V)
32	DCLK	Dot clock signal
33	DISP	Display on/off
34	HS	Horizontal sync signal
35	VS	Vertical sync signal
36	DE	A data ENABLE input signal
37	VDD_OTP/NC	No connect
38	SDA/NC	serial data input/output signal/No connect
39	SCL/NC	Serial clock signal/No connect
40	CS/NC	Chip select signal/No connect

4 RGB Timing Characteristics

4.1 Sync mode

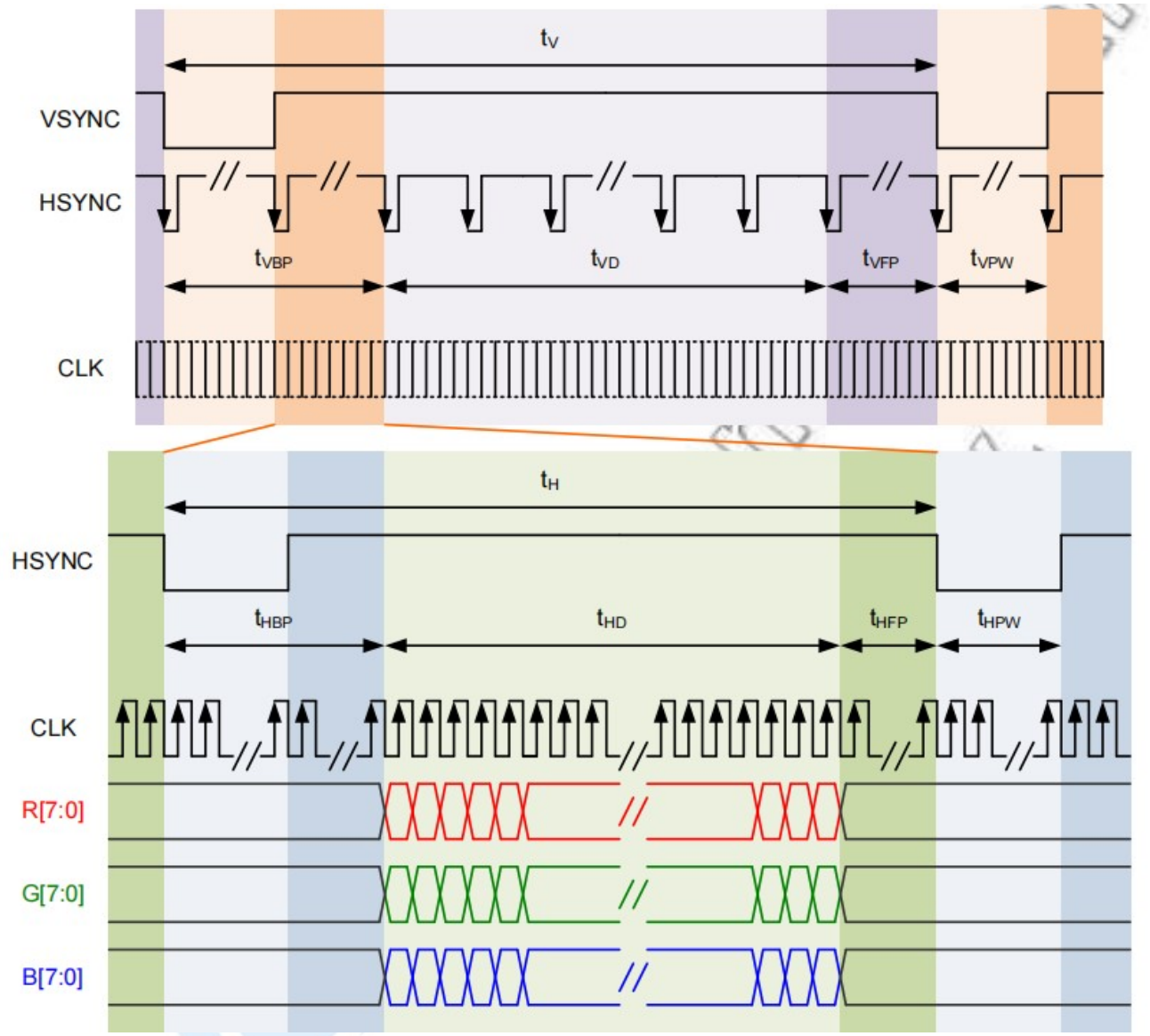

4.2 DE mode

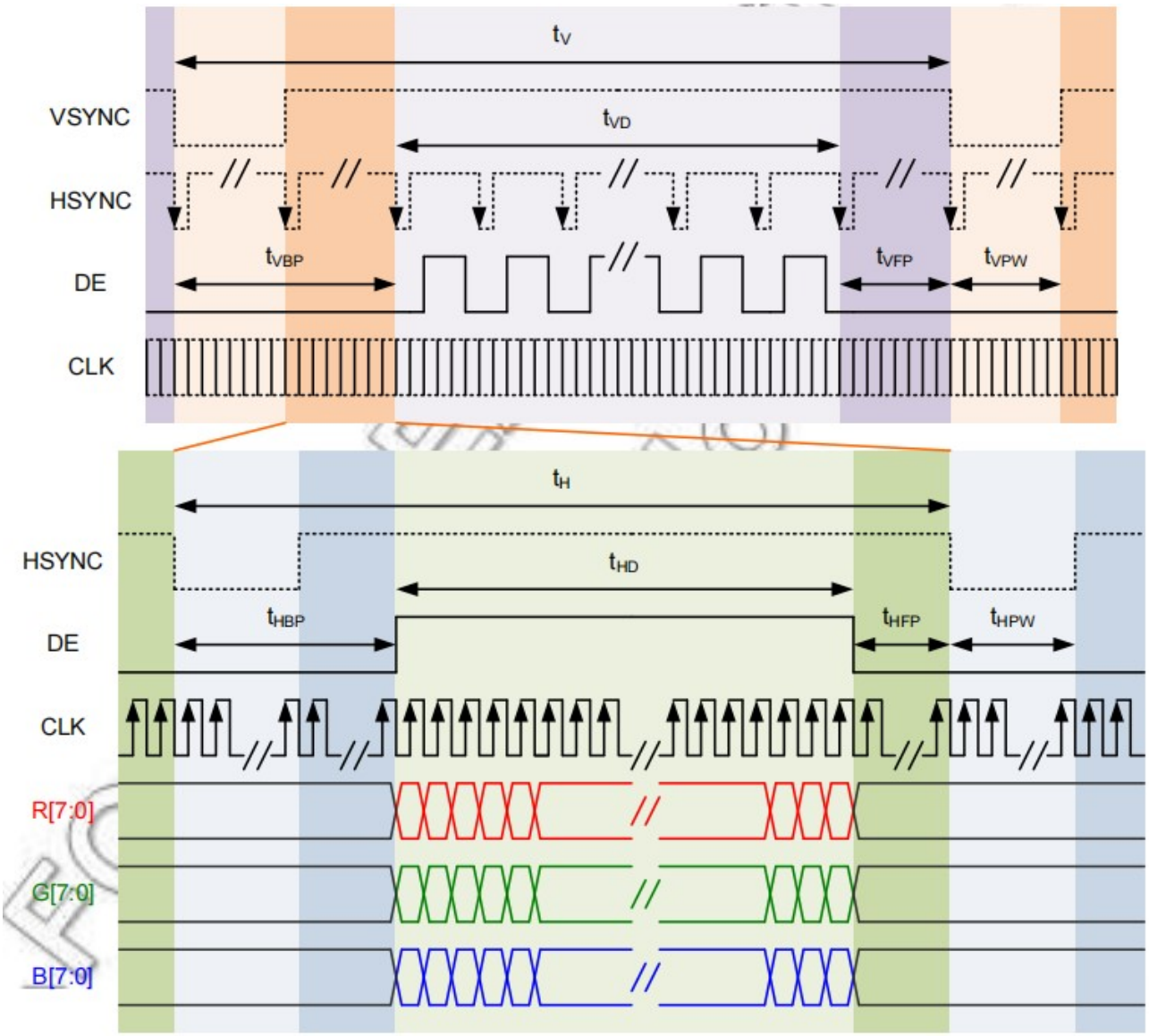
tV
VSYNC
tVD
HSYNC
tVBP
tVFP
tVPW
DE
CLK
tH
HSYNC
tHD
tHBP
tHFP
tHPW
DE
CLK
R[7:0]
G[7:0]
B[7:0]

5 Absolute Maximum Ratings

PARAMETER	SYMBOL	MIN	MAX	UNIT
Supply Voltage (Analog)	VCI~GND	-0.3	+3.6	V
Logic signal voltage(I/O)	IOVCC~GND	-	-	V
Operating Temperature	TOP	-30	85	° C
Storage Temperature	TST	-40	90	° C
Humidity	RH	-	90%(Max 60° C)	RH

6 Electrical Characteristics

PARAMETER	SYMBOL	MIN	TYP	MAX	UNIT
Analog operating voltage	VCI	2.8	-	3.3	V
Logic operating voltage	IOVCC	-	-	-	V
Input Current	IDD	-	TBD	-	mA
Input Voltage ' H ' level	VIH	0.7IOVCC	-	IOVCC	V
Input Voltage ' L ' level	VIL	GND	-	0.3IOVCC	
Output Voltage ' H ' level	VOH	0.8IOVCC	-	IOVCC	
Output Voltage ' L ' level	VOL	GND	-	0.2IOVCC	

7 Backlight Characteristics

ITEM	SYMBOL	MIN	TYP	MAX	UNIT
Voltage for LED backlight	V_f	-	18	-	V
Current for LED backlight	I_f	-	70	-	mA
Power consumption	Wbl	-	1260	-	mW
Uniformity	Avg	80	-	-	%
LED Life Time	-	30000	40000	-	Hrs

Note:

1.The LED life time is defined as the module brightness decrease to 50% original brightness at Ta=25°C, 60%RH ±5 %.

2. The life time of LED will be reduced if LED is driven by high current, high ambient temperature and humidity conditions.

3. Typical operating life time is an estimated data.

4. Permanent damage to the device may occur if maximum values are exceeded or reverse voltage is loaded .Functional operation should be restricted to the conditions described under normal operating conditions.

8 LCD Optical specifications

Item	Symbol	Condition	Specification			Unit	Remark
			Min	Typ	Max		
Response time (By Quick)	Tr+Tf	θ = 0°	-	25	-	ms	Note 5
Contrast ratio	CR	θ = 0°	1000	1200	-		Note 2,6
Viewing angle	Top	CR≧10	80	85	-	Deg.	Note 2,6,7
	Bottom	CR≧10	80	85	-		
	Left	CR≧10	80	85	-		
	Right	CR≧10	80	85	-		
Color Filter Chromacicity with C light	Wx	θ = 0°	-0.04	0.34	+0.04		Note 3
	Wy			0.36			
	Rx			TBD			
	Ry			TBD			
	Gx			TBD			
	Gy			TBD			
	Bx			TBD			
	By			TBD			
Transmittance	Trans		-	2.62%	-		Note 4

Note 1: Ambient temperature = 25°C.

Note 2: To be measured with a viewing cone of 2°by Topcon luminance meter BM-5A.

Note 3: To be measured with Otsuta chromaticity meter LCF-2100M, CF only measure under C light simulation.

Note 4: CTC shipping status is cell without polarizer. Transmittance of Specification is cell with polarizer. The tolerance of Transmittance is ±10%.

Note 5: Definition of response time:

The output signals of TRD-100 are measured when the input signals are changed to “White” (falling time) and from “White” to “Black” (rising time), respectively. The interval is between the 10% and 90% of amplitudes. Refer to figure as below.

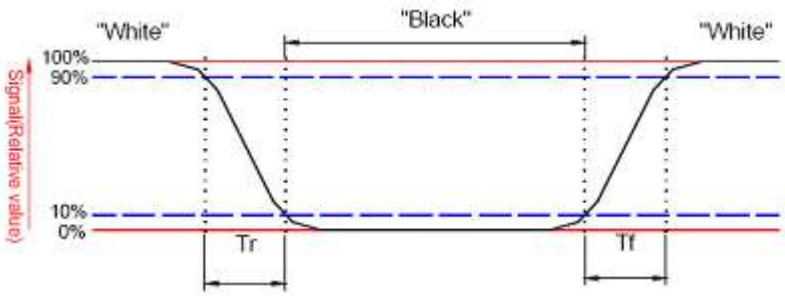

Note 6: Definition of contrast ratio:

Contrast ratio is calculated by the following formula.

$$\text{Contrast ratio (CR)} = \frac{\text{Brightness on the "white" state}}{\text{Brightness on the "black" state}}$$

Note 7: Definition of viewing angle

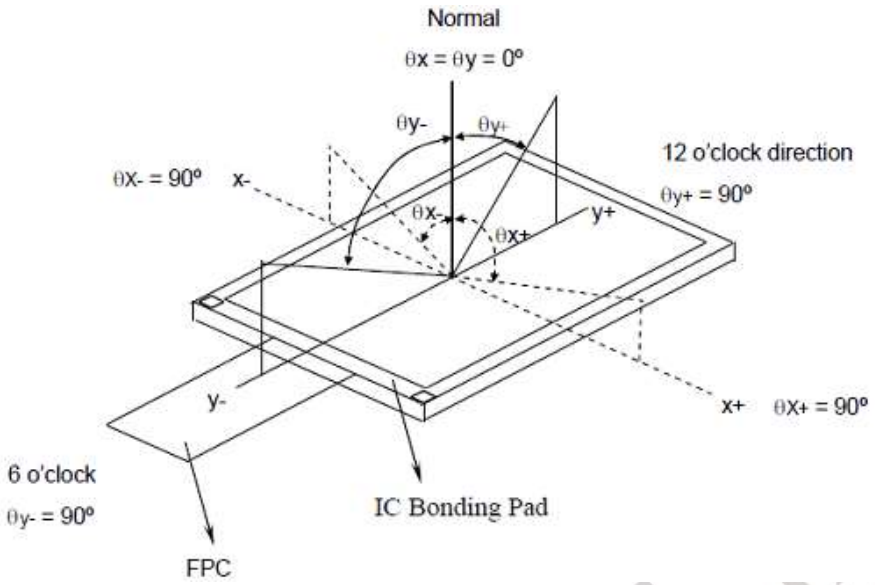

Note 8: Optical characteristic measurement setup.

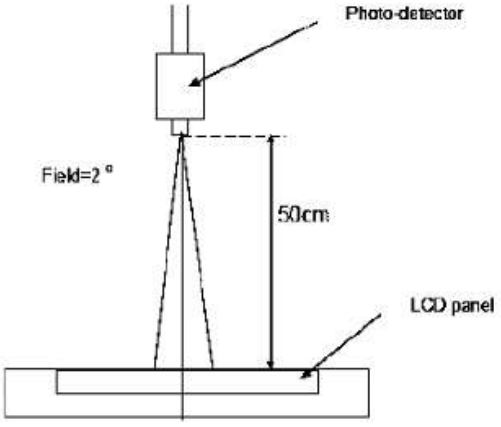

Note 9:

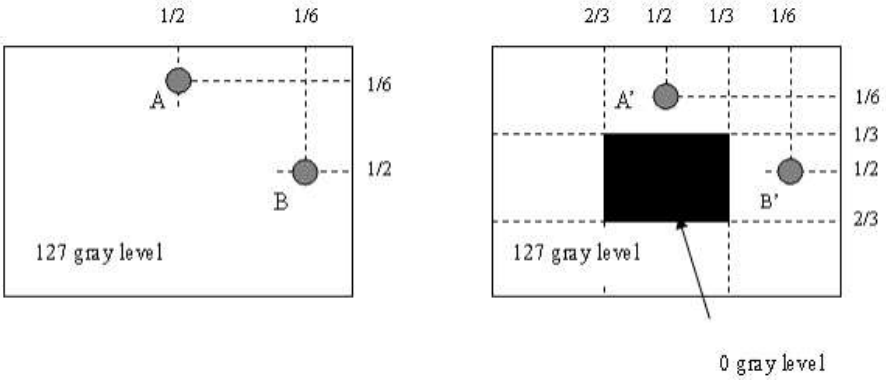

l LA-LA' l / LA x 100%= 2% max., LA and LA' are brightness at location A and A'.

l LB-LB' l / LB x 100%= 2% max., LB and LB' are brightness at location B and B'.

9 RELIABILITY TEST

NO.	TEST ITEM	TEST CONDITION	INSPECTION AFTER TEST
1	High Temperature Storage	90°C/96 hours	Inspection after 2~4 hours storage at room temperature and humidity. The condensation is not accepted. The sample shall be free from defects: 1. Air bubble in the LCD 2. Seal leak 3. Non-display 4. Missing segments 5. Glass crack
2	Low Temperature Storage	-40°C/96 hours	
3	High Temperature Operating	85°C/96 hours	
4	Low Temperature Operating	-30°C/96 hours	
5	Temperature Cycle	-20±2°C ~ 25~ 70± 2°C × 10 cycles (30 min.) (5min.) (30min.)	
6	Damp Proof Test	60°C ±5°C × 90%RH/96 hours	
7	Vibration Test	Frequency 10Hz~55Hz Stroke: 1.5mm Sweep: 10Hz~150 Hz~10Hz 2 hours For each direction of X, Y, Z	
8	Shock Test	Half-sine, wave, 300m/s	
9	Packing Drop Test	Height: 80 cm 1 corner, concrete floor	
10	Electrostatic Discharge Test	C=150pF, R=330 Ω Air: ±8KV 150pF/330Ω 30 times Contact: ±4KV,20 times	
11	Image Sticking	25℃,60%RH (ref. to Remark(1))	30mins

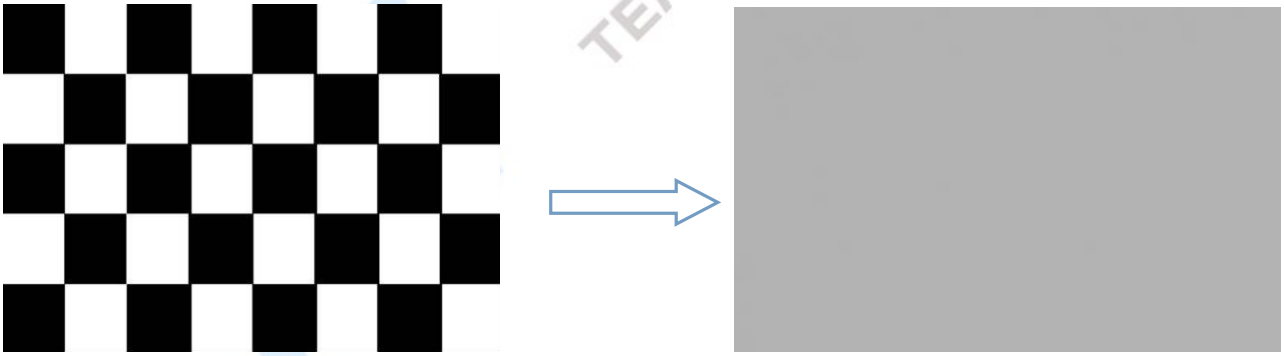

5*8 chess pattern

10 Image Sticking

10.1 What is image sticking?

If you remain a fixed image on LCD Display for a long period of time, you may experience a phenomenon called Image Sticking. Image Sticking - sometimes also called "image retention" or "ghosting" - is a phenomenon where a faint outline of a previously displayed image remains visible on the screen when the image is changed. It can occur at variable levels of intensity depending on the specific image makeup, as well as the amount of time the core image elements are allowed to remain unchanged on the screen. In POS applications, for example, a

button menu which remains fixed, or in which the "frame" elements (core image) remain fixed and the buttons may change, may be susceptible to image sticking. It is important to note that if the screen is used exclusively for this application, the user may never notice this phenomenon since the screen never displays other content. `It is only when an image other than the "retained" image is shown on the screen that this issue becomes evident. Image sticking is different that the "burn-in" effect commonly associated with phosphor based devices.

10.2 What cause image sticking?

Image sticking is an intrinsic behavior of LCD displays due to the susceptibility to polarization of the interior materials (liquid crystals) when used under static, charged conditions (continuously displaying the same image). The individual liquid crystals in an LCD panel have unique electrical properties. Displaying a fixed pattern - such as the POS menu described above – over prolonged periods can cause a parasitic charge build-up (polarization) within the liquid crystals which affects the crystals' optical properties and ultimately prevents the liquid crystal from returning to its normal, relaxed state when the pattern is finally changed. This effect takes place at a cellular level within the LCD, and the effect can cause charged crystal alignment at the bottom or top of a crystal cell in the "z" axis, or even crystal migration to the edges of a cell, again based on their polarity. These conditions can cause image sticking over an entire area, or at boundaries of distinct color change respectively. In either case, when the liquid crystals in the pixels and sub-pixels utilized to display the static image are polarized such that they can not return fully to their "relaxed" state upon deactivation, the result is a faint, visible, retained image on the panel upon presentation of a new, different image. The actual rate of image retention depends on variation factors such as the specific image, how long it is displayed unchanged, the temperature within the panel and even the specific panel brand due to manufacturing differences amongst panel manufacturers.

10.3 How to avoid image sticking?

- Try not to operate the LCD with a "fixed" image on the screen for more than 1 hours.
- If you are operating the monitor in an elevated temperature environment and with a displayed image which is contrary to the recommendations in "For Software Developers" below, image stick can occur in as little as 30 minutes. Adjust your screen saver settings accordingly.
- Power down the unit during prolonged periods of inactivity such as the hours a store is closed or a shift during which the piece of equipment isn't used.
- Use a screensaver with a black or medium gray background that is automatically set to come on if the device is inactive for more than 5-10 minutes.
- Avoid placing the monitor in poorly ventilated areas or in areas that will create excess heat around the monitor for software developers.
- In defining the icons, buttons, or windows in the screen, try to utilize block patterns instead of distinct lines as borders for dividing the display into distinct areas.
- If it is necessary to display a static image, try to use colors that are symmetric to the middle grey level at the boundary of two different colors, and slightly shift the borders line once in a while.
- Try to utilize medium gray hues for those areas that will have prolonged display times or remain static as other menu elements change.

10.4 How to fix the image sticking?

Unlike the usually irreversible "burn-in" effects commonly associated with direct view phosphor display devices such as CRTs, an image retained on an LCD display can be reversed – often to a point of total invisibility. However, the severity of the underlying causes (as described above) of the image retained on a specific display, as well as

the variation factors under which the retained image was created, will dictate the final level of retention reversal. One way to erase a retained image on a panel is to run the screen (monitor "on") in an "all black" pattern for 4-6 hours. It is also helpful to do this in an elevated temperature environment of approximately 35° to 50°C. Again, utilizing a dynamic screen saver with an all black background during prolonged idle display periods is a good way to avoid image retention issues.

10.5 Is image sticking covered by TSD warranty?

Image sticking is a phenomenon inherent to LCD Display technology itself, and as such, the occurrence of this "ghosting" effect is considered normal operation by the manufacturers of the LCD display modules which are integrated into today's monitor solutions. TSD does not warrant any display against the occurrence of image sticking. We strongly advise that you follow the operating recommendations listed above to avoid the occurrence of this phenomenon.

11 Suggestions for using LCD modules

11.1 Handling of LCM

1. The LCD screen is made of glass. Don't give excessive external shock, or drop from a high place.
2. If the LCD screen is damaged and the liquid crystal leaks out, do not lick and swallow. When the liquid is attach to your hand, skin, cloth etc, wash it off by using soap and water thoroughly and immediately.
3. Don't apply excessive force on the surface of the LCM.
4. If the surface is contaminated, clean it with soft cloth. If the LCM is severely contaminated, use Isopropyl alcohol/Ethyl alcohol to clean. Other solvents may damage the polarizer. The following solvents is especially prohibited: water , ketone Aromatic solvents etc.
5. Exercise care to minimize corrosion of the electrode. Corrosion of the electrodes is accelerated by water droplets, moisture condensation or a current flow in a high-humidity environment.
6. Install the LCD Module by using the mounting holes. When mounting the LCD module make sure it is free of twisting, warping and distortion. In particular, do not forcibly pull or bend the I/O cable or the backlight cable.
7. Don't disassemble the LCM.
8. To prevent destruction of the elements by static electricity, be careful to maintain an optimum work environment.
- Be sure to ground the body when handling the LCD modules.
- Tools required for assembling, such as soldering irons, must be properly grounded.
- To reduce the amount of static electricity generated, do not conduct assembling and other work under dry conditions.
- The LCD module is coated with a film to protect the display surface. Exercise care when peeling off this protective film since static electricity may be generated.

9. Do not alter, modify or change the the shape of the tab on the metal frame.
10. Do not make extra holes on the printed circuit board, modify its shape or change the positions of components to be attached.
11. Do not damage or modify the pattern writing on the printed circuit board.
12. Absolutely do not modify the zebra rubber strip (conductive rubber) or heat seal connector
13. Except for soldering the interface, do not make any alterations or modifications with a soldering iron.
14. Do not drop, bend or twist LCM.

11.2 Storage

1. Store in an ambient temperature of 5 to 45 C, and in a relative humidity of 40% to 60%. Don't expose to sunlight or fluorescent light.
2. Storage in a clean environment, free from dust, active gas, and solvent.
3. Store in antistatic container.

12 Limited Warranty

12.1

Our warranty liability is limited to repair and/or replacement. We will not be responsible for any consequential loss.

12.2

If possible, we suggest customer to use up all LCD modules as soon as possible. If the LCD module storage time over twelve months, we suggest to recheck it before being used.

12.3

Any product issues must be feedback to TSD within twelve months since delivery, otherwise, we will not be responsible for the subsequent or consequential events.