WUMA 午马传动
Dreams drive the future!

WMSS/SSVF Series Selection Catalogue

WMSS/SSVF系列不锈钢减速机目录册

2026J

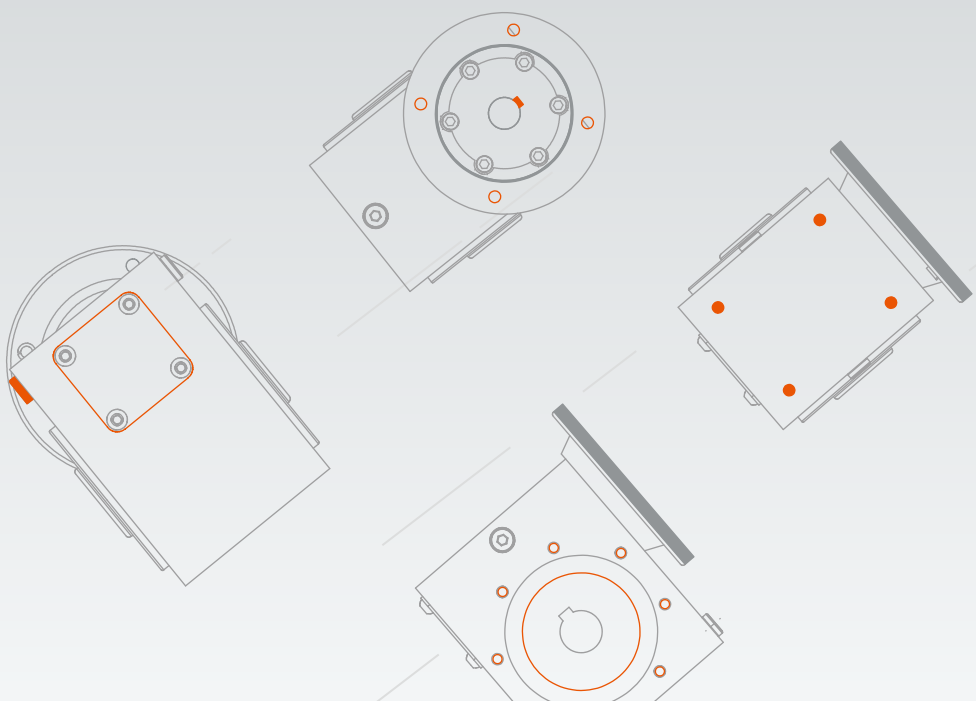

SINCE 1995

RELIABLE MOTION

SMARTER FUTURE



面积 Area **60,000㎡**

历史 Experience **30+**

技术人员 Technicians **30+**

员工 Employees **300+**

年产量 Annual Output Units **800,000**

浙江午马传动有限公司前身为浙江午马减速机有限公司，经营发展渊源可追溯至1995年；
历经三十余年发展，已成长为专注于减速机与精密传动领域的专业制造商。2021年，公司完成主体升级，成立浙江午马传动有限公司，延续"午马(WUMA)"品牌发展体系，迈入智能制造与高质量发展新阶段。
目前，公司拥有员工300余人、生产面积60000平方米，年产各类减速机50万余台。围绕工业传动应用需求，形成以RV系列蜗轮蜗杆减速机、R/K/F/S系列硬齿面斜齿轮减速机、准双曲面减速机等为核心的系列化、模块化产品体系，等10余个产品系列、数千种规格型号，广泛服务于食品包装、环保设备、仓储物流、智能制造等行业。
依托数字化制造体系、精密加工能力和完善的质量管理体系，公司持续提升全链条品牌服务能力;深耕海外市场超25年，产品远销全球80个国家，围绕"1+N"中国数字化制造中心+全球模块化组装中心的经营模式，构建全球协同的制造与交付网络，从产品出海迈向品牌出海。未来，午马传动将持续深化技术创新与智能制造升级，以可靠传动赋能高效生产，致力于打造一流的中国减速机出口企业与一流的中国减速机品牌——可靠传动，智启未来。

ZHEJIANG WUMA DRIVE CO.,LTD., formerly known as ZHEJIANG WUMA REDUCER CO., LTD., traces its business development back to 1995;
After over three decades of development, the company has grown into a professional manufacturer specializing in the field of reducers and precision transmissions. In 2021, the company underwent a major transformation, establishing ZHEJIANG WUMA DRIVE CO.,LTD. It continues to develop under the "WUMA" brand, marking a new stage in its journey towards intelligent manufacturing and high-quality growth.
Currently, the company employs over 300 staff members and occupies a production area of 60,000 square meters, with an annual output of over 500,000 various types of reducers. Focusing on the needs of industrial transmission applications, the company has established a serialized and modular product system centered around the RV series worm gear reducers, R/K/F/S series hardened tooth surface helical gear reducers, and hypoid reducers, among other products. With over 10 product series and thousands of specifications and models, the company serves a wide range of industries including food packaging, environmental protection equipment, warehousing and logistics, and intelligent manufacturing.
Relying on a digital manufacturing system, precision machining capabilities, and a comprehensive quality management system, the company continuously enhances its full-chain brand service capabilities. With over 25 years of deep exploration in overseas markets, its products are exported to 80 countries worldwide. Centered around the "1+N" business model of China Digital Manufacturing Center + Global Modular Assembly Center, the company has built a globally collaborative manufacturing and delivery network, transitioning from product export to brand export. Looking ahead, Wuma will continue to deepen technological innovation and intelligent manufacturing upgrades, empowering efficient production with reliable transmission, and striving to build a first-class Chinese reducer export enterprise and a first-class Chinese reducer brand - Reliable Transmission, intelligently ushering in the future.







使命 MISSION

让传动更可靠，让生产更高效

愿景 VISION

成为全球一流的智能传动方案引领者

价值观 VALUES

共创共享
Win-win Together
精益求精
Ultimate Excellence

至诚至信
Mutual Trust
使命必达
Accountability



午马传动智能数字化车间以工业 4.0 技术为核心，构建了一个高效、精准且环保的现代化生产体系。车间采用了高度自动化的生产线，整合了 AGV 无人搬运系统、德马吉、马扎克等精密加工设备，实现从原材料到成品的智能化生产，并通过物联网传感器实时收集设备状态和工艺数据，结合 PLM 与 MES 系统集成，实现了生产调度的动态优化，从而将生产线切换时间缩短了 40 %，质量缺陷率降低了 30%。

Wuma Drive's intelligent digital workshop takes Industry 4.0 technology as its core and builds an efficient, precise and environmentally friendly modern production system. The workshop uses a highly automated production line, integrates AGV unmanned handling systems, DMG and Mazak precision processing equipment, and realizes intelligent production from raw materials to finished products. It also collects equipment status and process data in real time through IoT sensors, and combines PLM and MES system integration to achieve dynamic optimization of production scheduling, thereby shortening the production line switching time by 40% and reducing the quality defect rate by 30%

DMG 德玛吉 卧式箱体加工中心	**LG-MAZAK** 马扎克 箱体加工中心
MITSUBUSHI 三菱 滚齿机	**TSUGAMI** 津上 精加工车床
HEADMAN 海德曼 精加工车床	**TOMAN** 陀曼 滚齿机



Smart Workshop
智能化车间











QUALITY









Digital Factory
数字化工厂



Content

目录

1 WMSS系列不锈钢减速机
WMSS SERIES STAINLESS STEEL REDUCER

性能特点	Advantages	P01
产品分解图	Product disassembly graph	P02
标记方式	Model designation	P03
代号标记注解	Sign explanation	P03
选型参数	Parameter selections	P04
安装尺寸	Installation dimensions	P06
输出法兰安装尺寸	Output flange mounting dimensions	P06
电机法兰安装尺寸	Motor flange mounting dimensions	P06
单向/双向输出轴尺寸	Dimensions of single/double output shaft	P12
转矩臂尺寸	Dimensions of torque arms	P12

2 SSVF系列不锈钢减速机
SSVF SERIES STAINLESS STEEL REDUCER

性能特点	Advantages	P13
安装尺寸	Installation dimensions	P14-16

3 故障原因及解决办法
SOLUTION AND REASON FOR THE GENERAL FAULTS OF VARIATOR ····· P17

4 减(变)速机订货须知
NOTICESIN SPEEDREDUCER(SPEED CHANGER)PROCUREMENT ····· P18

WMSS系列不锈钢减速机
WMSS SERIES STAINLESS STEEL REDUCER

标准版本IP65 Standard version IP65	升级版本IP69K Upgraded version IP69K
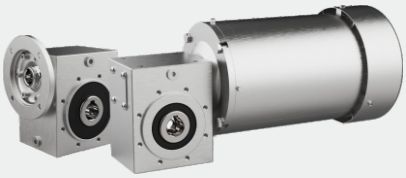	

性能特点 Advantages

WMSS不锈钢蜗轮蜗杆减速机的开发旨在实现卫生与清洁性。包含6种不同规格，尺寸范围从 WMSS30到 WMSS90。

1.箱体SUS304材质(SUS316材质可选)，外形美观，表面光滑，污垢难以附着。

2.安装方式多样，可以与输出轴，转矩臂等多种配件搭配使用

3.中心高和标准WMRV系列相同，与标准IEC尺寸电机连接

WMSS stainless steel worm gearboxes have been developed with the aim of hygiene and cleanability.

Model size consists of 6 different sizes from WMSS30 to WMSS90.

1. The housing is made of SUS304 stainless steel(SUS316 optional): beautiful appearance and smooth surface make it difficult for dirt to adhere.
2. Strong adaptability: easily assembled with various accessories such as output shafts and torque arms.
3. The center height is same as the standard WMRV series, assembly with standard IEC motors.

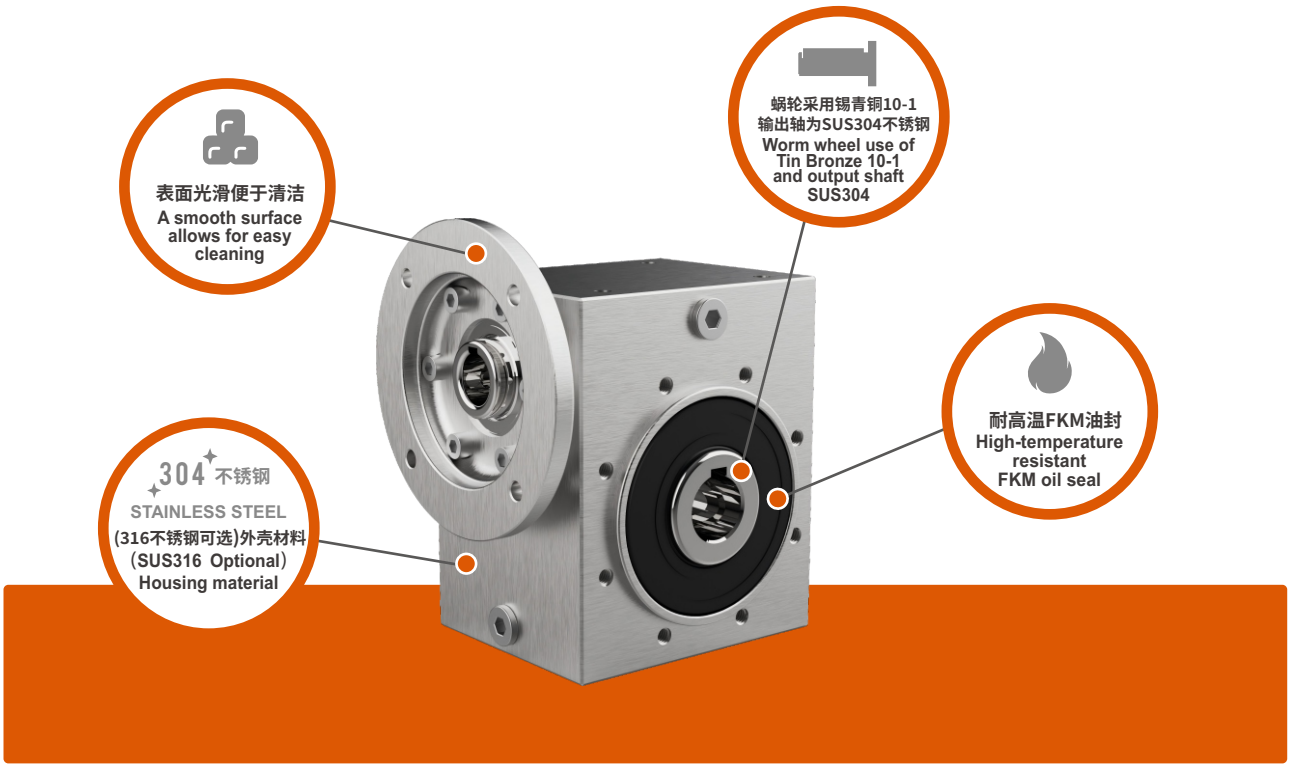

产品分解图 Product disassembly graph

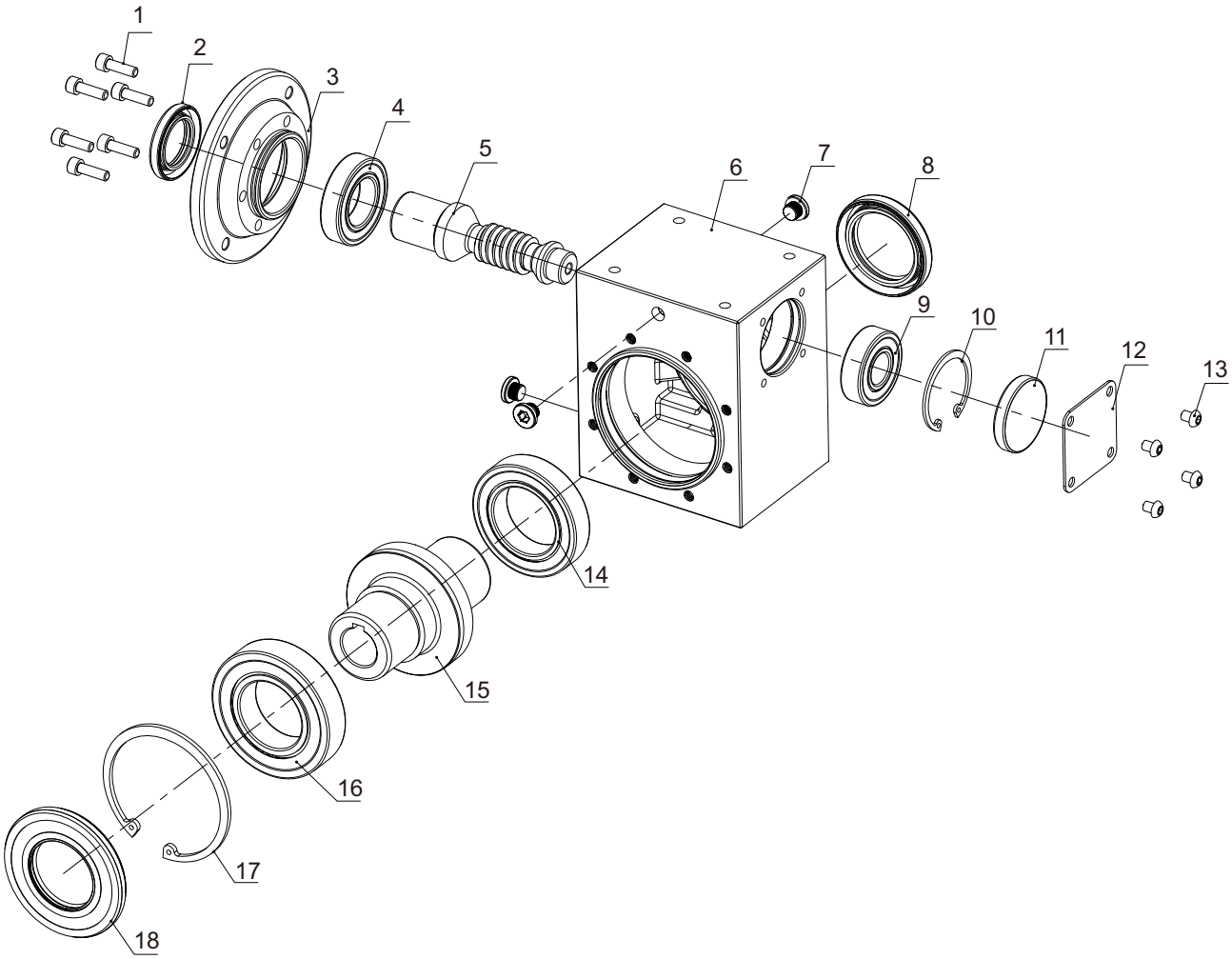

序号	名称	Name	序号	名称	Name
1	螺钉	Screws	10	孔用卡簧	Circlip for hole
2	油封	Oil seal	11	端盖油封	Seal cover
3	输入法兰	Input flange	12	保护盖	Cover
4	轴承	Bearing	13	螺钉	Screws
5	蜗杆	Worm shaft	14	轴承	Bearing
6	箱体	Housing	15	蜗轮	Worm gear
7	油塞	Oil plug	16	轴承	Bearing
8	油封	Oil seal	17	孔用卡簧	Circlip for hole
9	轴承	Bearing	18	油封	Oil seal

标记方式 Model designation

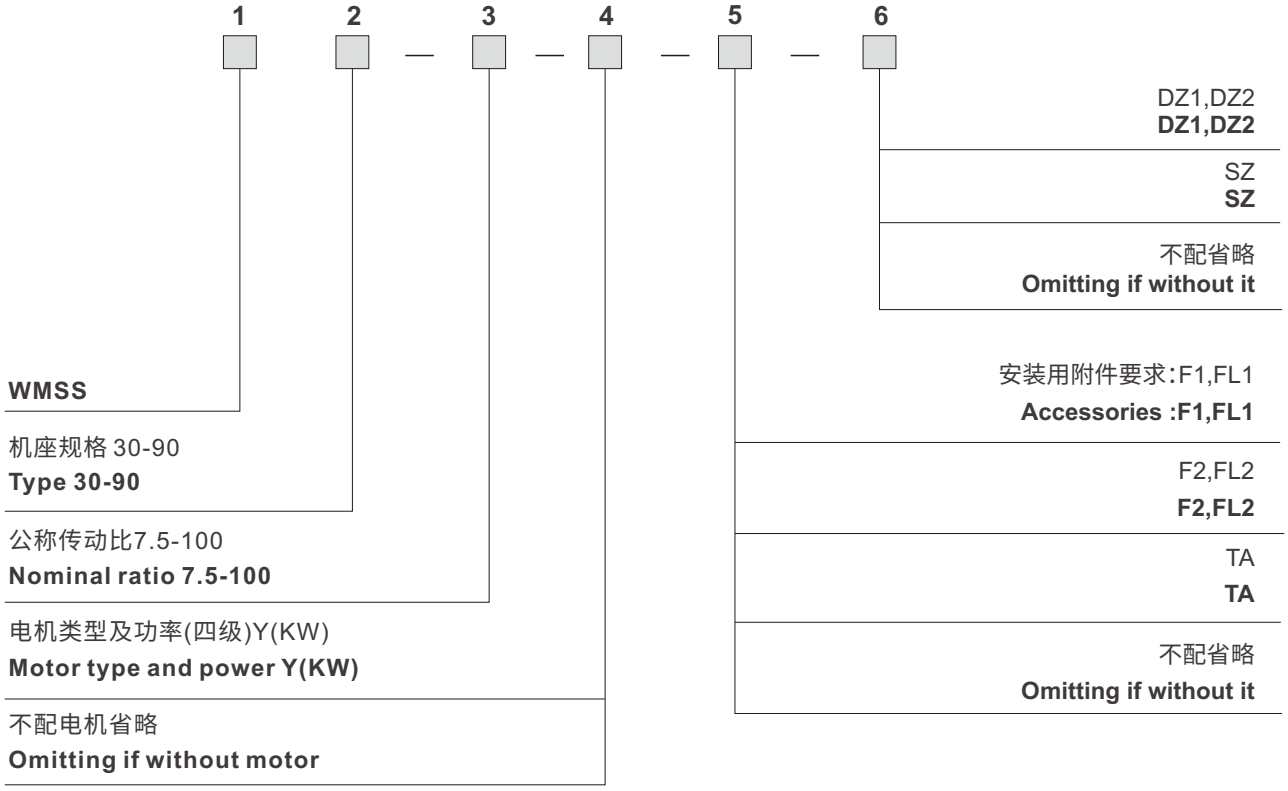

代号标记注解 Sign explanation

WMSS	带输入法兰式减速机(配合电机使用)
30-40-50-63-75-90	减速机的机座规格(中心距参数)
7.5-10-15-20-25-30-40-50-60-80-100	公称传动比
Y0.18	配普通Y系列电动机,功率为0.18KW
YEJ0.18	配制动电机,功率为0.18KW
F.....(1-2),FL...(1-2)	输出法兰及安装型式(F-输出短法兰,FL-输出长法兰)
TA	转矩臂

WMSS	With input flange(using with electric motor)
30-40-50-63-75-90	Type(centre distance)
7.5-10-15-20-25-30-40-50-60-80-100	Nominal ratio
Y0.18	With electric motor in series Y, the power is 0.18KW
YEJ0.18	With brake motor, the power is 0.18KW
F.....(1-2),FL...(1-2)	Output flange and mounting position (F-short output flange. FL-long output flange)
TA	With torque arm

选型参数 Parameter selections

输出转速 Output speed r/min	输出扭矩 Output torque Nm	传动比 Transmission ratio i	输出轴径向力 Output radial force kN	使用系数 fs	机型代号 Model code	对应公制电机机座 IEC input	对应英制机座 NEMA input
0.06kW							
186.7	2.6	7.5	0.68	6.9			
140	3.4	10	0.75	5.4			
93.3	4.7	15	0.86	3.8			
70	6	20	0.94	3.0			
56	7	25	1.02	3.0	WMSS30	56B5/56B14	
46.7	8	30	1.08	2.5			
35	9.7	40	1.19	1.9			
28	11	50	1.28	1.5			
23.3	13	60	1.36	1.3			
17.5	14	80	1.5	0.9			
0.09kW							
186.7	3.9	7.5	0.68	4.6			
140	5	10	0.75	3.6			
93.3	7.1	15	0.86	2.5			
70	9	20	0.94	2.0			
56	10	25	1.02	2.0	WMSS30	56B5/56B14	
46.7	12	30	1.08	1.7			
35	14	40	1.19	1.2			
28	17	50	1.28	1.0			
23.3	19	60	1.36	0.9			
28	19	50	2.47	2.0			
23.3	21	60	2.63	1.7	WMSS40	56B5/56B14	
17.5	26	80	2.89	1.3			
14	29	100	3.11	1.0			
0.12kW							
186.7	5.2	7.5	0.68	3.4			
140	6.7	10	0.75	2.7			
93.3	9.5	15	0.86	1.9			
70	12	20	0.94	1.5	WMSS30	63B5/63B14	48C
56	14	25	1.02	1.5			
46.7	16	30	1.08	1.3			
35	19	40	1.19	0.9			
28	23	50	1.28	0.8			
46.7	17.2	30	2.08	2.6			
35	21	40	2.29	1.9			
28	25	50	2.47	1.5	WMSS40	63B5/63B14	56C
23.3	28	60	2.63	1.3			
17.5	34	80	2.89	1.0			
14	38	100	3.11	0.8			
23.3	29	60	3.61	2.3			
17.5	35	80	3.97	1.9	WMSS50	63B5/63B14	56C
14	40	100	4.28	1.4			
0.18kW							
186.7	7.8	7.5	0.68	2.3			
140	10	10	0.75	1.8			
93.3	14	15	0.86	1.3	WMSS30	63B5/63B14	48C
70	18	20	0.94	1.0			
56	21	25	1.02	1.0			
46.7	24	30	1.08	0.8			
70	19	20	1.82	2.0			
56	23	25	1.96	1.7	WMSS40	63B5/63B14	56C
46.7	26	30	2.08	1.7			

输出转速 Output speed r/min	输出扭矩 Output torque Nm	传动比 Transmission ratio i	输出轴径向力 Output radial force kN	使用系数 fs	机型代号 Model code	对应公制电机机座 IEC input	对应英制机座 NEMA input
0.18kW							
35	32	40	2.29	1.3			
28	38	50	2.47	1.0	WMSS40	63B5/63B14	56C
23.3	43	60	2.63	0.8			
35	32	40	3.15	2.3			
28	39	50	3.39	1.9			
23.3	43	60	3.61	1.6	WMSS50	63B5/63B14	56C
17.5	52	80	3.97	1.2			
14	60	100	4.28	0.9			
0.25kW							
186.7	11	7.5	1.31	3.6			
140	14	10	1.44	2.8			
93.3	21	15	1.65	1.9			
70	27	20	1.82	1.5	WMSS40	71B5/71B14	56C
56	32	25	1.96	1.2			
46.7	36	30	2.08	1.3			
35	44	40	2.29	0.9			
28	37	50	2.47	0.8			
70	26	20	2.5	2.7			
56	32	25	2.69	2.2			
46.7	37	30	2.86	2.3			
35	46	40	3.15	1.7	WMSS50	71B5/71B14	56C
28	54	50	3.39	1.4			
23.3	60	60	3.61	1.1			
17.5	72	80	3.97	0.9			
28	56	50	4.44	2.4			
23.3	63	60	4.71	2.0	WMSS63	71B5/71B14	56C
17.5	78	80	5.19	1.6			
14	87	100	5.59	1.4			
0.37kW							
186.7	16	7.5	1.31	2.4			
140	21	10	1.44	1.9			
93.3	31	15	1.65	1.3	WMSS40	71B5/71B14	56C
70	39	20	1.82	1.0			
56	47	25	1.96	0.8			
46.7	53	30	2.08	0.8			
140	21	10	1.98	3.3			
93.3	31	15	2.27	2.4			
70	40	20	2.5	1.8			
56	48	25	2.69	1.5			
46.7	55	30	2.86	1.5	WMSS50	71B5/71B14	56C
35	68	40	3.15	1.1			
28	80	50	3.39	0.9			
23.3	89	60	3.61	0.8			
35	70	40	4.12	2.1			
28	83	50	4.44	1.6			
23.3	94	60	4.71	1.4	WMSS63	71B5/71B14	56C
17.5	115	80	5.19	1.1			
14	129	100	5.59	0.9			
0.55kW							
186.7	25	7.5	1.8	2.9			
140	32	10	1.98	2.2			
93.3	46	15	2.27	1.6	WMSS50	80B5/80B14	56C
70	59	20	2.5	1.2			

选型参数 Parameter selections

输出转速 Output speed r/min	输出扭矩 Output torque Nm	传动比 Transmission ratio i	输出轴径向力 Output radial force kN	使用系数 fs	机型代号 Model code	对应公制电机机座 IEC input	对应英制机座 NEMA input
0.55kW							
56	71	25	2.69	1.0	WMSS50	80B5/80B14	56C
46.7	81	30	2.86	1.0			
35	80	40	3.15	0.9			
70	60	20	3.27	2.2	WMSS63	80B5/80B14	56C
56	73	25	3.52	1.8			
46.7	83	30	3.74	1.9			
35	105	40	4.12	1.4			
28	124	50	4.44	1.1			
23.3	140	60	4.71	0.9			
0.75kW							
186.7	34	7.5	1.8	2.1	WMSS50	80B5/80B14	56C
140	44	10	1.98	1.6			
93.3	63	15	2.27	1.2			
70	81	20	2.5	0.9			
93.3	63	15	2.97	2.2	WMSS63	80B5/80B14	56C
70	83	20	3.27	1.6			
56	100	25	3.52	1.3			
46.7	114	30	3.74	1.4			
35	143	40	4.12	1.0			
56	102	25	4.16	2.0	WMSS75	80B5/80B14	145TC
46.7	117	30	4.42	2.0			
35	147	40	4.86	1.5			
28	177	50	5.24	1.2			
23.3	200	60	5.56	1.0			
28	184	50	5.79	1.8	WMSS90	80B5/80B14	145TC
23.3	212	60	6.16	1.5			
17.5	258	80	6.78	1.1			
14	302	100	7.3	0.9			
1.1kW							
186.7	49	7.5	2.35	2.6	WMSS63	90B5/90B14	56C/145TC
140	65	10	2.59	2.0			
93.3	93	15	2.97	1.5			
70	122	20	3.27	1.1			
56	146	25	3.52	0.9			
46.7	167	30	3.74	1.0			
35	165	40	3.59	0.9			
93.3	95	15	3.5	2.1	WMSS75	90B5/90B14	56C/145TC
70	123	20	3.86	1.7			
56	150	25	4.16	1.3			
46.7	171	30	4.42	1.3			
35	216	40	4.86	1.0			
28	264	50	4.6	0.9			
23.3	223	60	4.89	0.8			
35	225	40	5.38	1.6	WMSS90	90B5/90B14	56C/145TC
28	270	50	5.79	1.3			
23.3	311	60	6.16	1.0			
17.5	328	80	6.17	0.9			

输出转速 Output speed r/min	输出扭矩 Output torque Nm	传动比 Transmission ratio i	输出轴径向力 Output radial force kN	使用系数 fs	机型代号 Model code	对应公制电机机座 IEC input	对应英制机座 NEMA input
1.5kW							
186.7	67	7.5	2.35	1.9	WMSS63	90B5/90B14	145TC
140	89	10	2.59	1.5			
93.3	127	15	2.97	1.1			
70	166	20	3.27	0.8			
140	90	10	3.06	2.2	WMSS75	90B5/90B14	145TC
93.3	130	15	3.5	1.5			
70	168	20	3.86	1.3			
56	205	25	4.16	1.0			
46.7	233	30	4.42	1.0			
70	171	20	4.27	2.1	WMSS90	90B5/90B14	145TC
56	210	25	4.6	1.6			
46.7	239	30	4.89	1.7			
35	307	40	5.38	1.2			
28	368	50	5.79	0.9			
23.3	424	60	6.16	0.8			
2.2kW							
186.7	100	7.5	2.78	1.8	WMSS75	100B5/100B14	180TC
140	132	10	3.06	1.5			
93.3	191	15	3.5	1.0			
70	240	20	3.38	0.9			
56	256	25	3.58	0.8			
46.7	269	30	3.89	0.8			
186.7	101	7.5	3.08	2.9	WMSS90	100B5/100B14	180TC
140	134	10	3.39	2.3			
93.3	194	15	3.88	1.9			
70	252	20	4.27	1.4			
56	308	25	4.6	1.1			
46.7	351	30	4.89	1.2			
35	433	40	4.9	1.0			
28	393	50	5.28	0.9			
3kW							
186.7	136	7.5	2.78	1.4	WMSS75	112B5/112B14	180TC
140	180	10	3.06	1.1			
93.3	261	15	3.5	0.8			
186.7	138	7.5	3.08	2.1	WMSS90	112B5/112B14	180TC
140	182	10	3.39	1.7			
93.3	264	15	3.88	1.4			
70	344	20	4.27	1.0			
56	420	25	4.6	0.8			
46.7	479	30	4.89	0.9			
4kW							
186.7	182	7.5	2.44	1.0	WMSS75	112B5/112B14	180TC
140	240	10	3.06	0.8			
186.7	184	7.5	3.08	1.6	WMSS90	112B5/112B14	180TC
140	243	10	3.39	1.3			
93.3	352	15	3.88	1.0			
70	458	20	4.27	0.8			

安装尺寸 / WMSS30 Installation dimensions

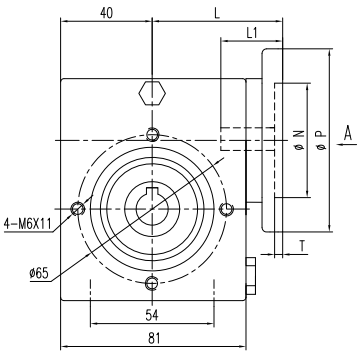

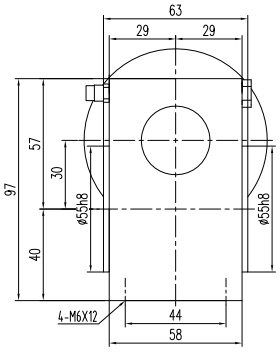

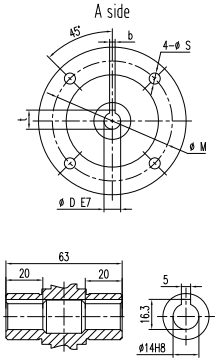

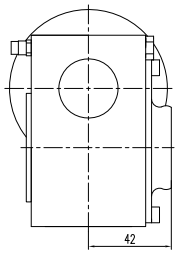

Safety cover
保护盖

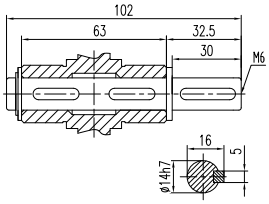

Single output shaft
单输出轴

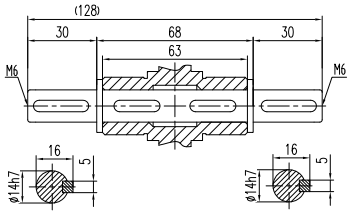

Double output shaft
双输出轴

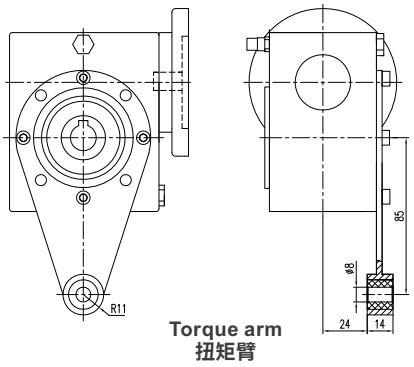

Torque arm
扭矩臂

输出法兰安装尺寸 Output flange mounting dimensions

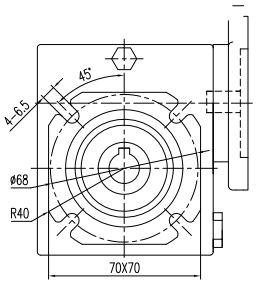

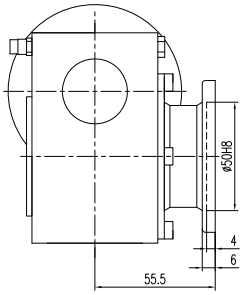

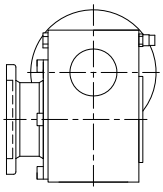

F2

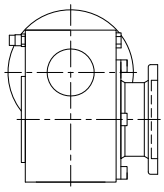

F1

电机法兰安装尺寸 Motor flange mounting dimensions

IEC	D (E7)	b	t	P	M	N	S	T	L	L1
56B5	ϕ9	3	10.4	80	65	50	7	3.5	55	21
56B14	ϕ9	3	10.4	120	100	80	5.5	3.5	55	21
63B5	ϕ11	4	12.8	90	75	60	9	3.5	55	24
63B14	ϕ11	4	12.8	140	115	95	5.5	3.5	55	24
56C	ϕ15.88	4.78	18.11	165	149.3	114.3	10.5	5	76	53

安装尺寸 / WMSS40 Installation dimensions

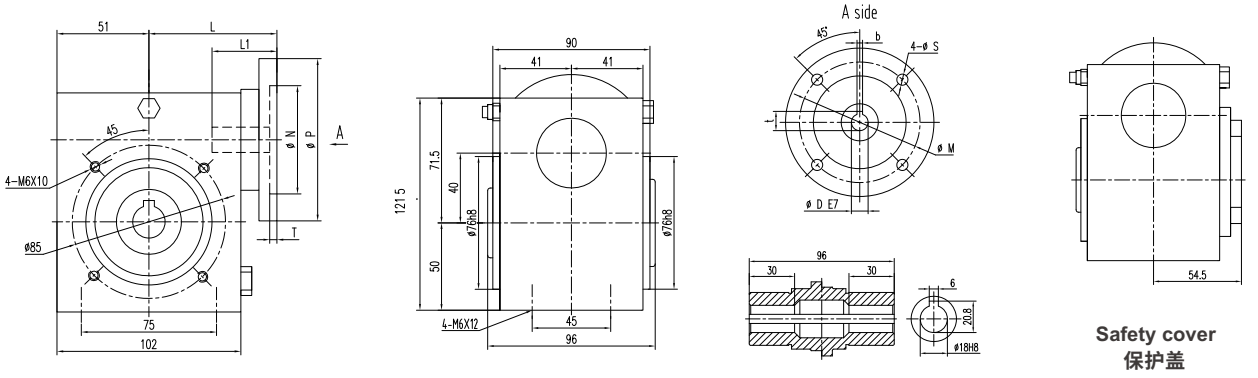

Safety cover
保护盖

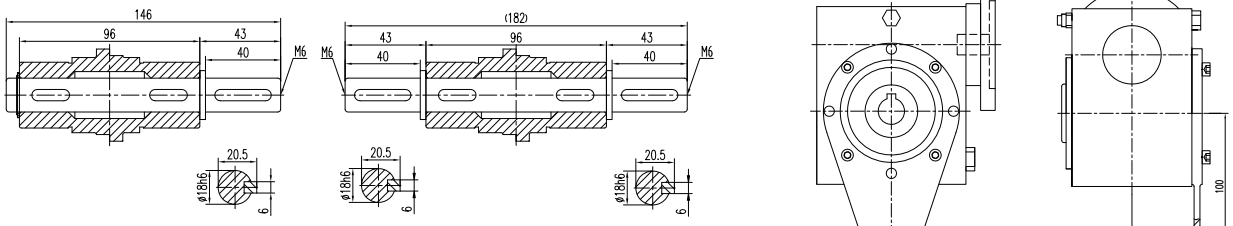

Single output shaft
单输出轴

Double output shaft
双输出轴

Torque arm
扭矩臂

输出法兰安装尺寸 Output flange mounting dimensions

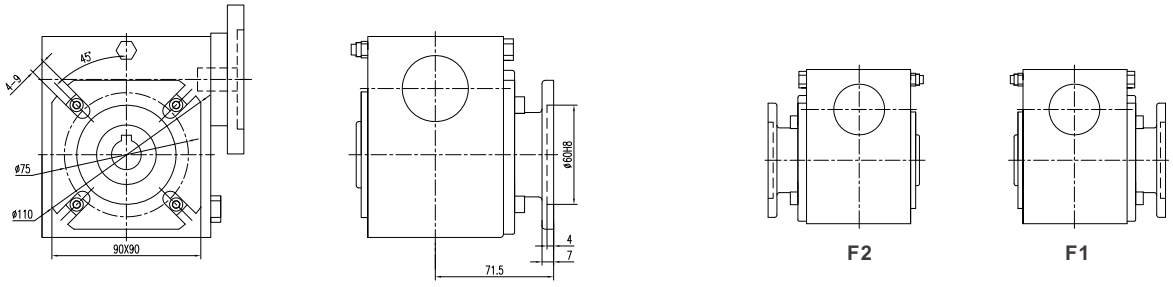

F2

F1

电机法兰安装尺寸 Motor flange mounting dimensions

IEC	D (E7)	b	t	P	M	N	S	T	L	L1
56B5	ϕ9	3	10.4	120	100	80	7	3.5	70	21
63B5	ϕ11	4	12.8	140	115	95	9	3.5	70	24
63B14	ϕ11	4	12.8	90	75	60	5.5	5	70	24
71B5	ϕ14	5	16.3	160	130	110	9	4	70	31
71B14	ϕ14	5	16.3	105	85	70	7	3	70	31
56C	ϕ15.88	4.78	18.11	165	149.3	114.3	10.5	5	87	53

安装尺寸 / WMSS50 Installation dimensions

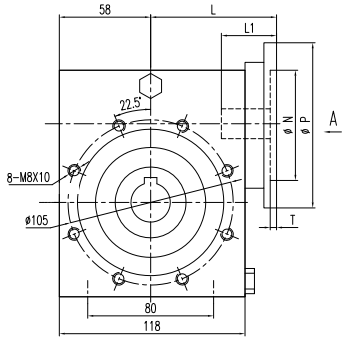

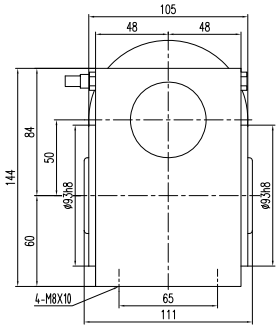

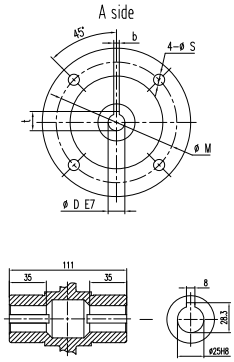

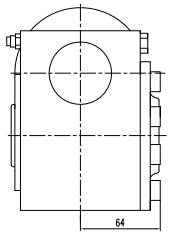

Safety cover
保护盖

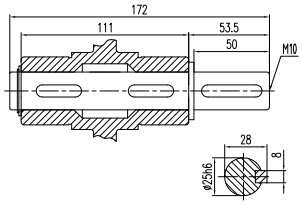

Single output shaft
单输出轴

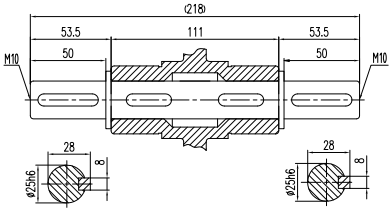

Double output shaft
双输出轴

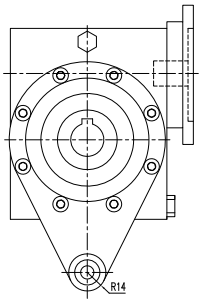

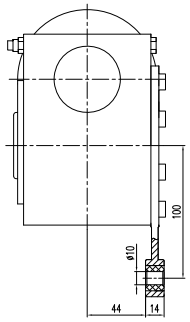

Torque arm
扭矩臂

输出法兰安装尺寸 Output flange mounting dimensions

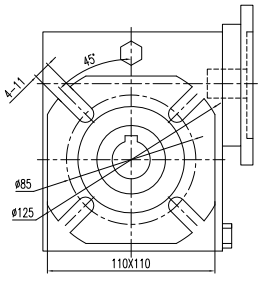

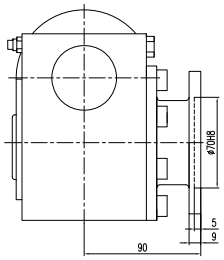

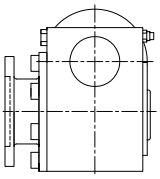

F2

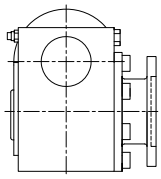

F1

电机法兰安装尺寸 Motor flange mounting dimensions

IEC	D (E7)	b	t	P	M	N	S	T	L	L1
63B5	ϕ11	4	12.8	140	115	95	9	4	79	24
63B14	ϕ11	4	12.8	90	75	60	5.5	6	79	24
71B5	ϕ14	5	16.3	160	130	110	9	4	79	31
71B14	ϕ14	5	16.3	105	85	70	6.6	6	79	31
80B5	ϕ19	6	21.8	200	165	130	11	4	79	41
80B14	ϕ19	6	21.8	120	100	80	7	4	80	41
56C	ϕ15.88	4.78	18.11	165	149.3	114.3	10.5	5	90	53

安装尺寸 / WMSS63 Installation dimensions

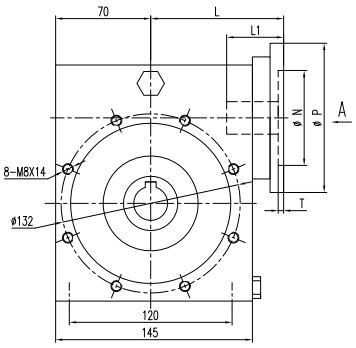

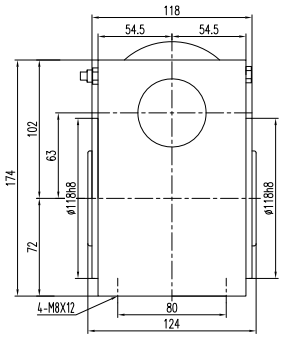

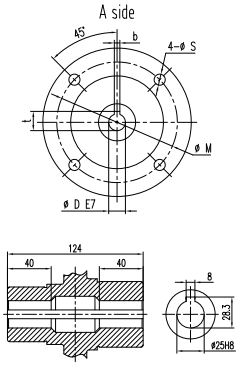

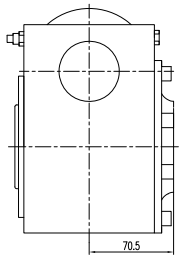

Safety cover
保护盖

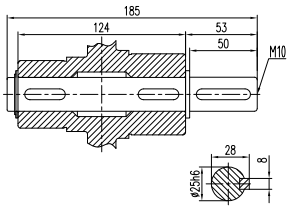

Single output shaft
单输出轴

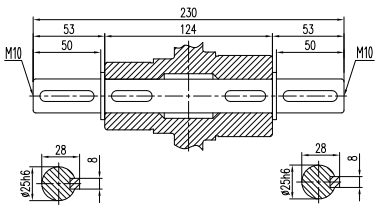

Double output shaft
双输出轴

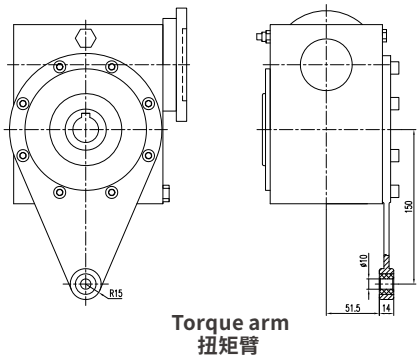

Torque arm
扭矩臂

输出法兰安装尺寸 Output flange mounting dimensions

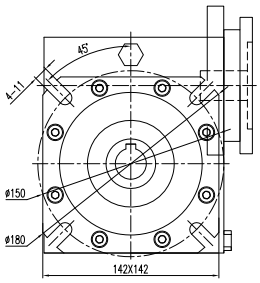

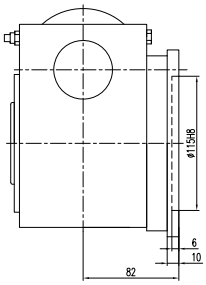

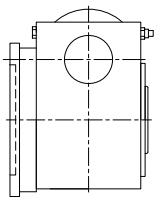

F2

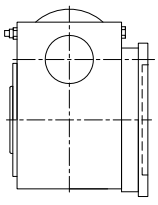

F1

电机法兰安装尺寸 Motor flange mounting dimensions

IEC	D (E7)	b	t	P	M	N	S	T	L	L1
71B5	ϕ14	5	16.3	160	130	110	9	4	96	31
71B14	ϕ14	5	16.3	105	85	70	6.6	6	96	31
80B5	ϕ19	6	21.8	200	165	130	11	4	96	41
80B14	ϕ19	6	21.8	120	100	80	7	4	96	41
90B5	ϕ24	8	27.3	200	165	130	11	4	96	51
90B14	ϕ24	8	27.3	140	115	95	9	4	96	51
56C	ϕ15.88	4.78	18.11	165	149.3	114.3	10.5	5	106	53
145TC	ϕ22.23	4.78	24.46	165	149.3	114.3	10.5	5	106	58

安装尺寸 / WMSS75 Installation dimensions

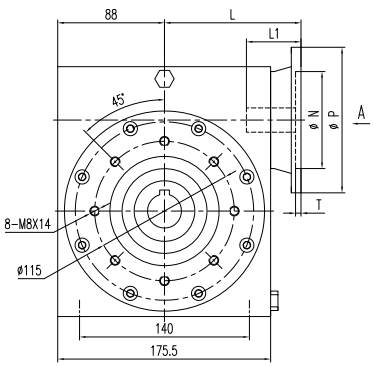

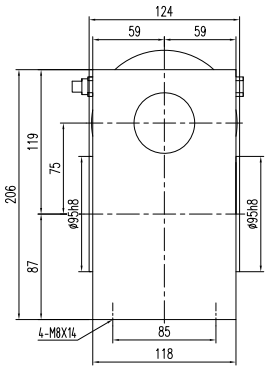

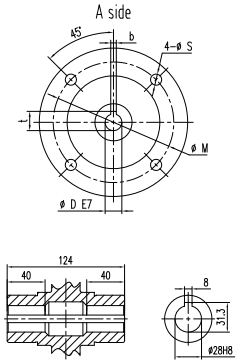

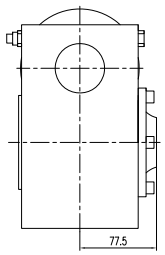

Safety cover
保护盖

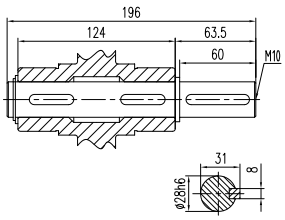

Single output shaft
单输出轴

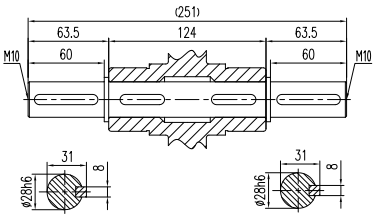

Double output shaft
双输出轴

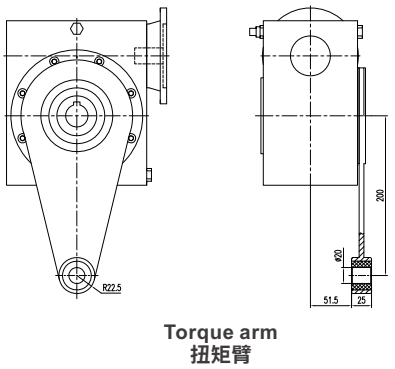

Torque arm
扭矩臂

输出法兰安装尺寸 Output flange mounting dimensions

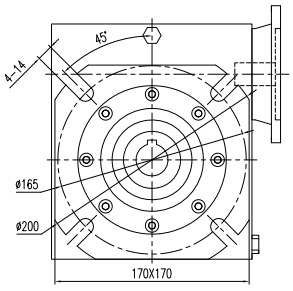

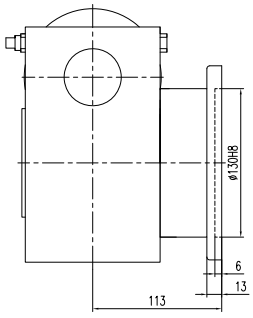

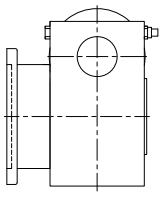

F2

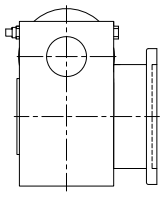

F1

电机法兰安装尺寸 Motor flange mounting dimensions

IEC	D (E7)	b	t	P	M	N	S	T	L	L1
80B5	ϕ19	6	21.8	200	165	130	11	6	112.5	41
80B14	ϕ19	6	21.8	120	100	80	6.6	6	112.5	41
90B5	ϕ24	8	27.3	200	165	130	11	6	112.5	51
90B14	ϕ24	8	27.3	140	115	95	9	6	112.5	51
100/112B5	ϕ28	8	31.3	250	215	180	14	6	112.5	61
100/112B14	ϕ28	8	31.3	160	130	110	9	6	112.5	61
56C	ϕ15.88	4.78	18.11	165	149.3	114.3	10.5	5	126	53
145TC	ϕ22.23	4.78	24.46	165	149.3	114.3	10.5	5	126	58
180TC	ϕ28.58	6.35	31.5	228.6	184.2	215.9	13.5	6	126	71

安装尺寸 / WMSS90 Installation dimensions

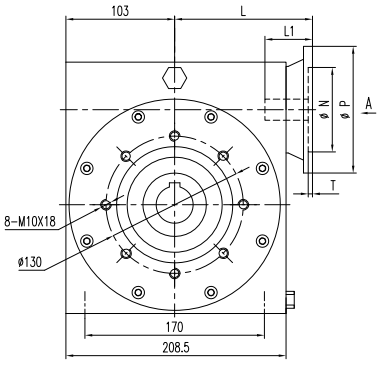

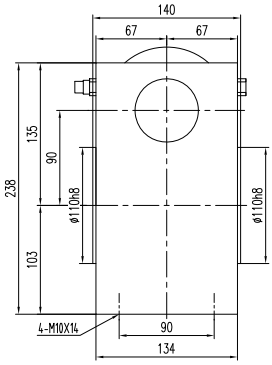

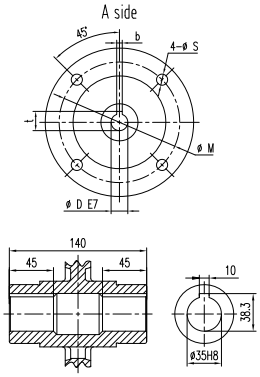

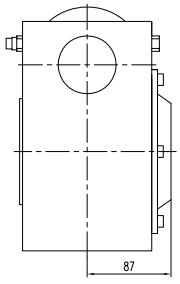

Safety cover
保护盖

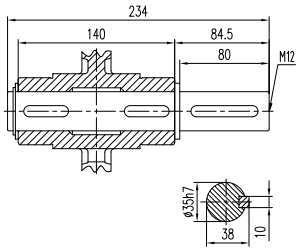

Single output shaft
单输出轴

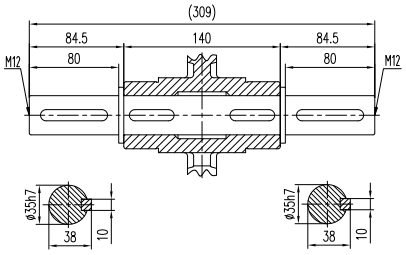

Double output shaft
双输出轴

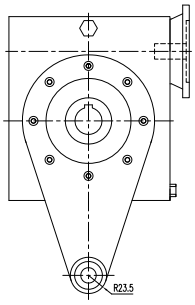

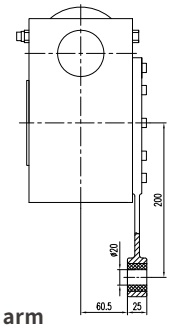

Torque arm
扭矩臂

输出法兰安装尺寸 Output flange mounting dimensions

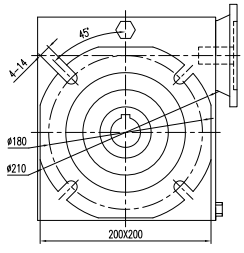

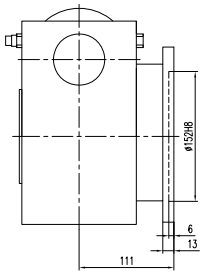

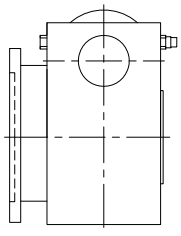

F2

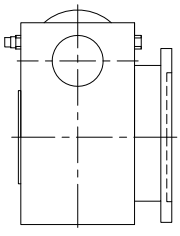

F1

电机法兰安装尺寸 Motor flange mounting dimensions

IEC	D (E7)	b	t	P	M	N	S	T	L	L1
80B5	ϕ19	6	21.8	200	165	130	11	6	129.5	41
80B14	ϕ19	6	21.8	120	100	80	6.6	6	129.5	41
90B5	ϕ24	8	27.3	200	165	130	11	6	129.5	51
90B14	ϕ24	8	27.3	140	115	95	9	6	129.5	51
100/112B5	ϕ28	8	31.3	250	215	180	14	6	129.5	61
100/112B14	ϕ28	8	31.3	160	130	110	9	6	129.5	61
56C	ϕ15.88	4.78	18.11	165	149.3	114.3	10.5	5	143	53
145TC	ϕ22.23	4.78	24.46	165	149.3	114.3	10.5	5	143	58
180TC	ϕ28.58	6.35	31.5	228.6	184.2	215.9	13.5	6	143	71

单向/双向输出轴尺寸 Dimensions of single/double output shaft

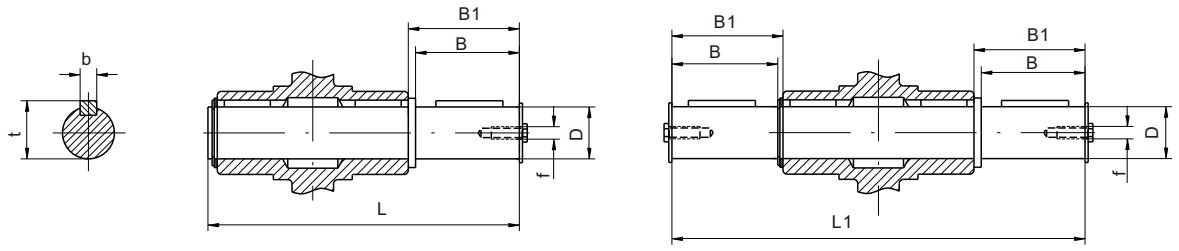

型号 Type	D(h6)	B	B1	L	L1	f	b	t
30	14	30	32.5	102	128	M6	5	16
40	18	40	43	128	164	M6	6	20.5
50	25	50	53.5	152	199	M10	8	28
63	25	50	53.5	173	219	M10	8	28
75	28	60	63.5	192	247	M10	8	31
90	35	80	84	234	308	M12	10	38

转矩臂尺寸 Dimensions of torque arms

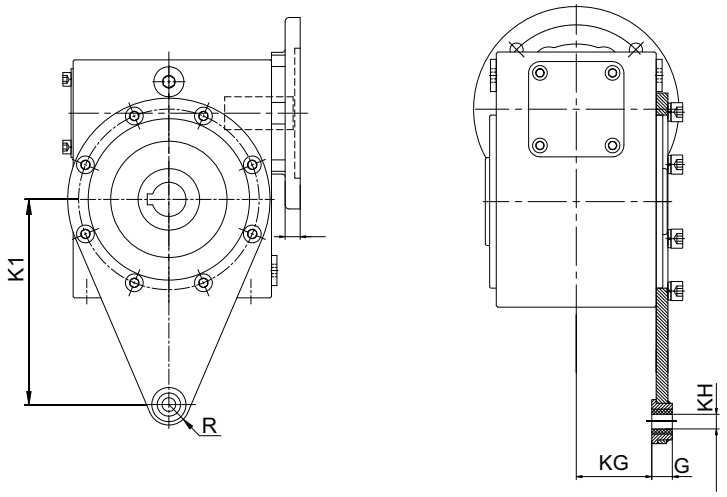

型号 Type	K1	R	KH	G	KG
30	85	11	8	14	24
40	100	15	10	14	37.5
50	100	14	10	14	44
63	150	15	10	14	51.5
75	200	30	20	25	47.5
90	200	30	20	25	57.5

SSVF系列不锈钢减速机
SSVF SERIES STAINLESS STEEL REDUCER



性能特点 Advantages

箱体按照WMVF蜗轮蜗杆减速机设计。304精密铸造，结构紧凑，轮芯304材质。

全合成蜗轮蜗杆油，减速机表面电解抛光，耐腐蚀，易清洗，速比多样，目前型号有40,50,63三种。

The housing is designed according tothe WMVF worm gearbox.
304 precisely produced, compact structure, wheel core made of 304 material.
Fully synthetic worm gear oil,the surface of thereducer iselectrolytically polished, the advantages are corrosion-resistant, easy to clean, and has various speed ratios. There are currentlythree models:40, 50,and 63.

标记方式 Model designation

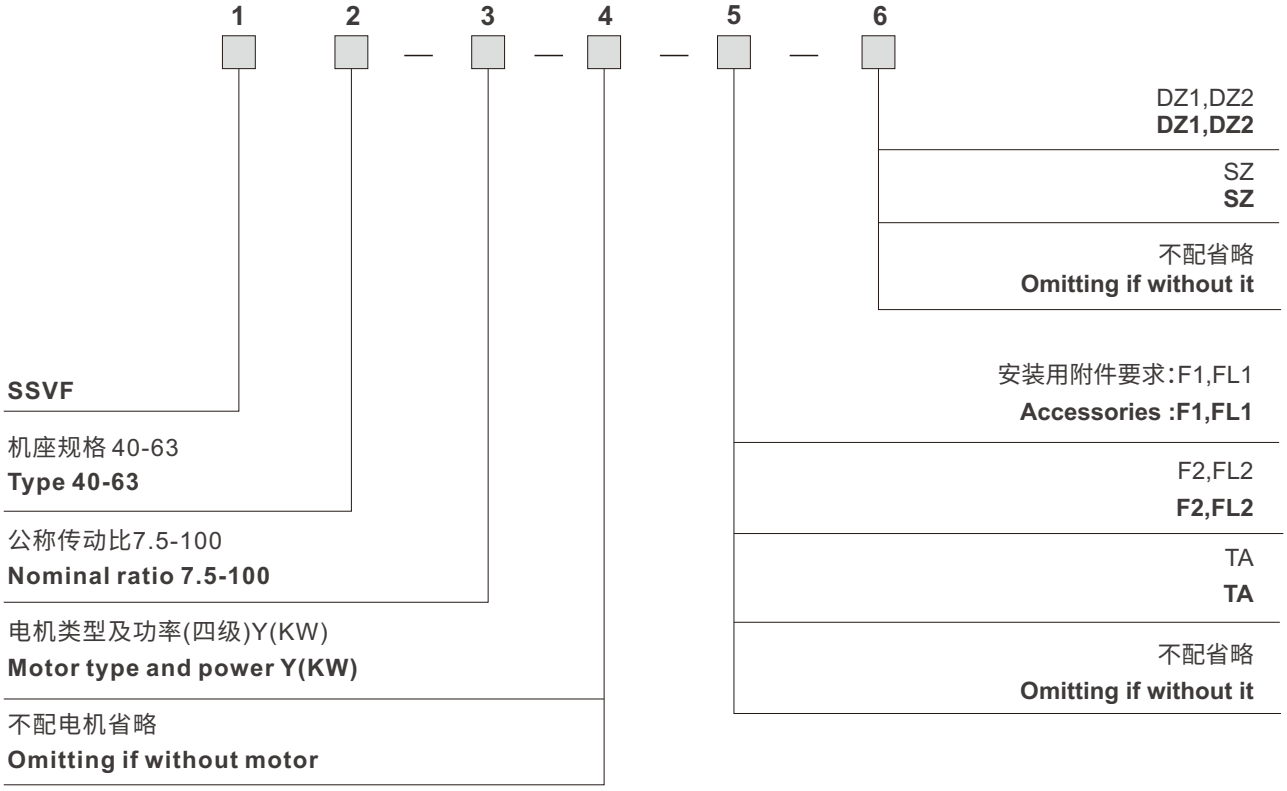

代号标记注解 Sign explanation

SSVF	带输入法兰式减速机(配合电机使用)
40-50-63	减速机的机座规格(中心距参数)
7.5-10-15-20-25-30-40-50-60-80-100	公称传动比
Y0.18	配普通Y系列电动机,功率为0.18KW
YEJ0.18	配制动电机,功率为0.18KW
F.....(1-2),FL...(1-2)	输出法兰及安装型式(F-输出短法兰,FL-输出长法兰)
TA	转矩臂

SSVF	With input flange(using with electric motor)
40-50-63	Type(centre distance)
7.5-10-15-20-25-30-40-50-60-80-100	Nominal ratio
Y0.18	With electric motor in series Y, the power is 0.18KW
YEJ0.18	With brake motor, the power is 0.18KW
F.....(1-2),FL...(1-2)	Output flange and mounting position (F-short output flange. FL-long output flange)
TA	With torque arm

安装尺寸 / SSVF40
Installation dimensions

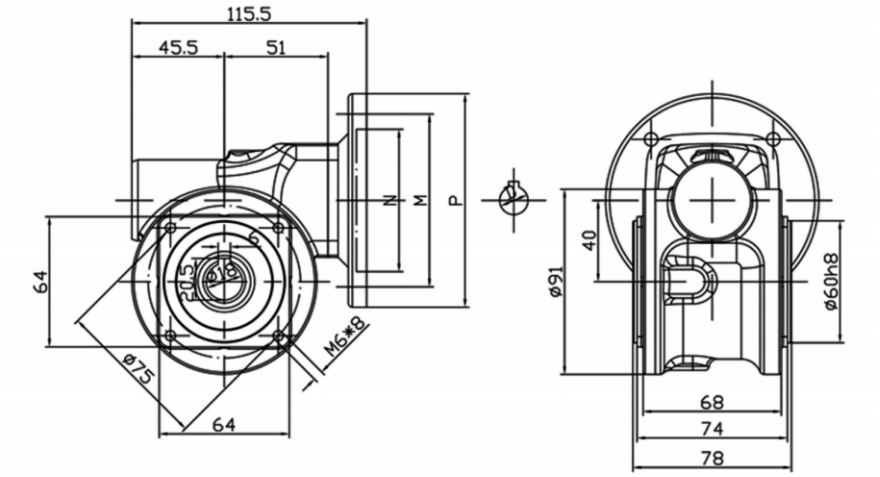

PAM-IEC	D(F8)	N(H8)	M	P
71B5	ϕ14	110	130	160
71B14	ϕ14	70	85	105
63B5	ϕ11	95	115	140
63B14	ϕ11	60	75	90

安装尺寸 / SSVF50
Installation dimensions

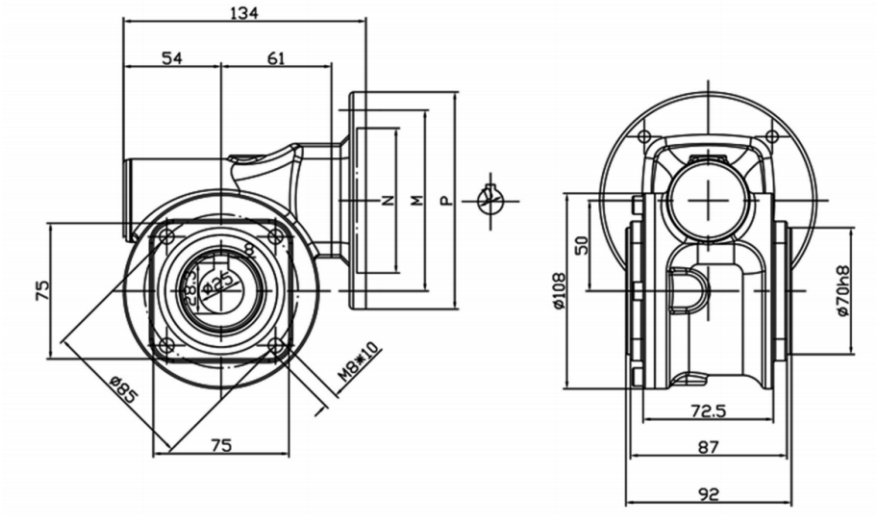

PAM-IEC	D(F8)	N(H8)	M	P
80B5	ϕ19	130	165	200
80B14	ϕ19	80	100	120
71B5	ϕ14	110	130	160
71B14	ϕ14	70	85	105
63B5	ϕ11	95	115	140
63B14	ϕ11	60	75	90

安装尺寸 / SSVF63
Installation dimensions

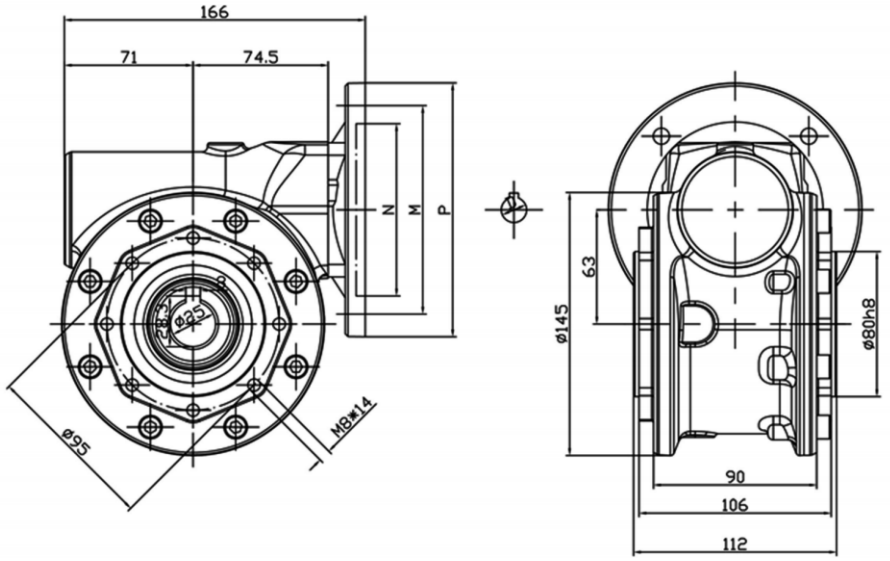

PAM-IEC	D(F8)	N(H8)	M	P
90B5	24	130	165	200
90B14	24	95	115	140
80B5	19	130	165	200
80B14	19	80	100	120
71B5	14	110	130	160
71B14	14	70	85	105

安装尺寸 / SSVF..F 输出法兰
Installation dimensions / SSVF..F Output flange

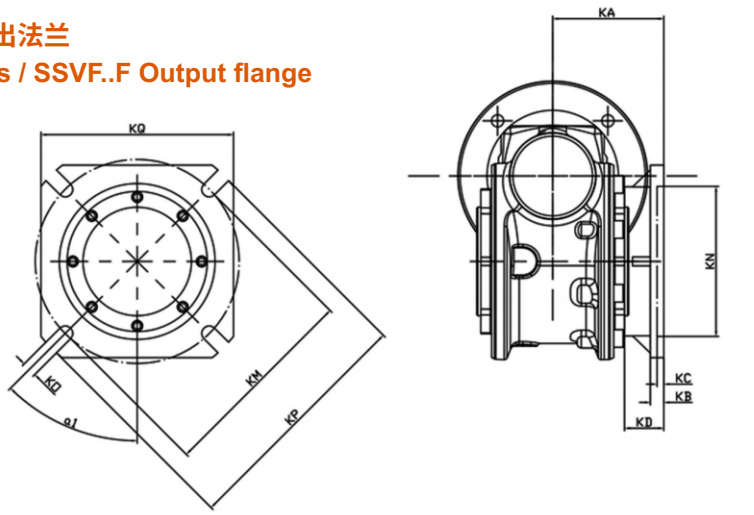

SSVF	a1	KA	KB	KC	KD	KM	KN	KO	KP	KQ
040	45°	67	7	4	31.5	75	60	9	110	95
050	45°	90	9	5	46.5	85	70	11	120	110
063	45°	82	10	6	29	150	115	11	180	142
075	45°	111	13	6	54	165	130	14	200	170
090	45°	111	13	6	44	175	152	14	210	200

安装尺寸 / SSVF输出轴
Installation dimensions / SSVF Output shaft

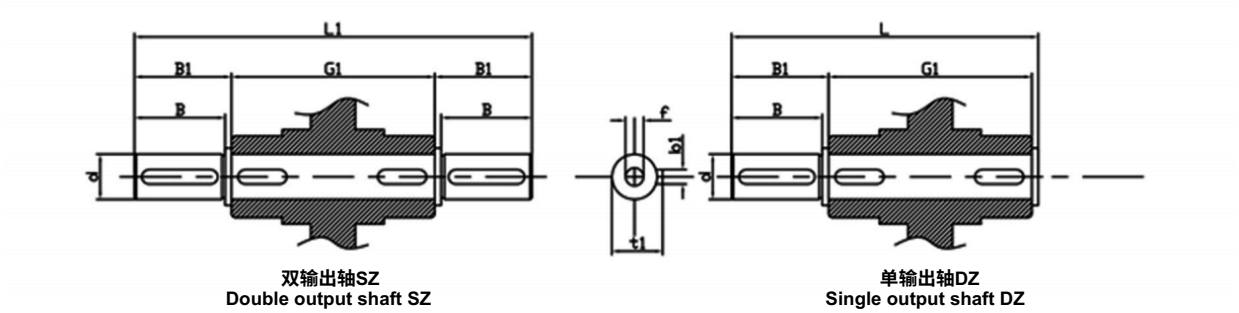

双输出轴SZ
Double output shaft SZ

单输出轴DZ
Single output shaft DZ

SSVF	d	B	B1	G1	L	L1	f	b1	t1
040	18	40	43	78	128	164	M6*17	6	20.5
050	25	50	53.5	92	153	199	M10*27	8	28
063	25	50	53.5	112	173	219	M10*27	8	28
075	28	60	63.5	120	192	247	M10*27	8	31
090	35	80	84.5	140	234	309	M12*34	10	38

安装尺寸 / SSVF扭力臂
Installation dimensions / SSVF Torque arm

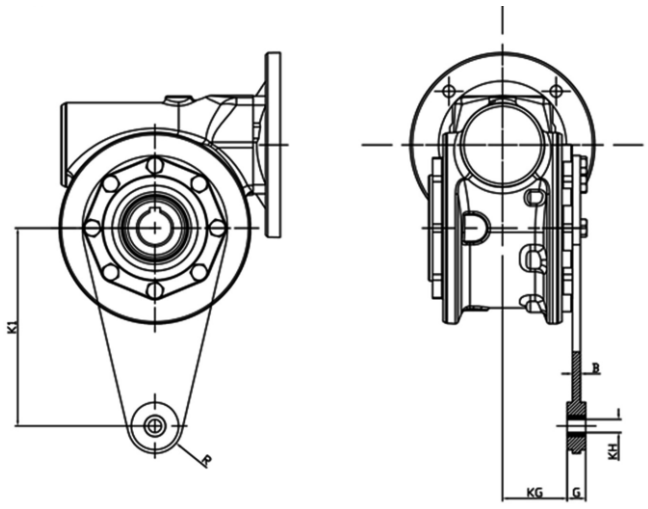

SSVF	K1	G	KG	KH	R	B
040	100	14	31.5	10	18	4
050	100	14	38.5	10	18	4
063	150	14	49	10	18	6
075	200	25	47.5	20	30	6
090	200	25	57.5	20	30	6

故障原因及解决办法 Solution and reason for the general faults of variator

故障类型 Fauit desciption	故障原因 Reasons	解决办法Soutions
过热 Overheating	原动机、减速机、工作机连接不当 超负荷运转 油封过度磨擦 润滑油过少或过多 润滑油杂质多或润滑性差 选型不当 The prime mover reducer and working machine conjunctions appropriate. Overloading. Oil seal damaged. Lubricant over litle or excessive. Lubricant imputy many or the lubricity bad. Choose model not appropriate.	调整至适当位置，使三者相联轴线同轴 适当调整负荷 在油封唇口处滴润滑油 按油标指示点调整油量 清洗油池，更换合适新油 更换机型 Adjust appropriate of position,make three conjunction stalk line to keep the same axis. To appropriate adjust loading. In the oil seal lips drop lubricant. Press oil mark to instruction the point adjust oil deal Wash the inner part clearly,change to fit new oil. Replace model.
振动 Vibration	原动机、减速机、工作机固定不良 蜗轮副齿部磨耗或损伤 轴承磨损 螺栓松脱 The prime mover *reducer and working machine fix bad Worm wheel pair the surface of gers wears or hurt Beating damaged. Bolt loose.	查出固定不良部位，正确固紧 更换蜗轮副(需要时本公司配合) 更换轴承 固紧螺栓 Look up to fix the bad part,right tighten. Replace worm wheel pair(Please contact with our company) Replace bearing. Tighten the bolts
杂音 Noise	轴承损伤或间隙过大 蜗轮副啮合不良 润滑油不足 机体内有异物 Bearing damaged or clearance too large. Worm wheel pair meshed with badly. Lubricant lack. The machine body have eyewinker.	更换轴承 修整齿面或更换蜗轮副(请与本公司联系) 按油标指示点补加润滑油 倒净润滑油带出异物，重加清洁润滑油 Replace bearing. Finish the surface of gears or replace worm wheel pair(Please oontad wih our company.) Press oil mark to instruction the point repair to add the lubricant Remove the lubricant to take out eyewinker, replace to add the clean lubricant.
漏油 Oil leakage	油封唇口磨损 油封档轴颈磨损 油量过多 放油螺塞未旋紧 油标破损 Oil seal lips wear and tear. Oil seal file stalk wear and tear. Oil mcasures excessive. Oil screw loosed. Oil gauge damaged.	更换油封 更换输出轴或输入轴 按油标指示点调整油量 螺纹处加密封胶，旋紧螺塞 更换油标 Replace oil seal. Replace output shaft or input shaf(Pliase conneet our compy) Press oil mark to instruction the point adjust oil denl Screw thread positian adds to seal completely the gum,tighten screw Replace Oil gauge.
蜗轮副齿面 磨损过快 Wom wheel pair the surface of gears wears away quick	超负荷运转 润滑油不符合要求 润滑油不足 未按规定适时换油，润滑油劣化 运转温度过高 Overloading. Lubricant not accord with the request: Lubricant lack. Have noby rule appropriate of the time change the oil,lubricant depranation. Overheating.	调整至适当负荷 更换合适的润滑油 按油标指示点加足润滑油 按规定要求适时换油 1.按“过热”故障处理 2.采取合适措施，降低环境温度 Adjust the appropriate loading. Replace the appropriate lubricant. Press oiling the mark to instruction point to add the foot lubricant By rule the request in the time changes the oils. 1.Press"over hot"to break down to handle. 2.Adopt the fit measure,and lower the environment termrerature

减（变）速机订货须知

1.主机名称：____
2.减速机在主机中的作用____
3.使用环境条件：温度____ 摄氏度
4.每天运转时间____
5.电机类型 ____功率____千瓦 ; 电压____伏特;输入转速____转/分;频率____赫兹
6.传动比____;输出轴转速____转/分
7.减速机所承受载荷（转矩）____N.m
8.减速机型号规格（按型号表示示例填写)_____
9.减速机与电动机连接方式_____
10.所需台数_____，希望供货时间____年____月____日
11.用户在订货时，双方需要签定全国同一格式文本合同，签定生效后双方务必按《中华人民共和国合同法》中有关条款规定执行。
12.在签定合司前，必须详细阅读了解本书中的各产品性能，使用范围特点，各种机型的型号表示方法，包括机型号安装方式、是否带电机、减速比、电机功率、扭矩力等相关内容。直接配电机的产品，除注明电机功率外，还要务必注明机种类，相数（电机）极数（转数）如没有注明一律按三相四极交流电机出厂。
13.用户在订货时尽量选取我公司的型号、规格、如特殊减速比、变速比、特殊电机可特殊订货，我分司可为用户特殊设计制造。
14.本书所例的各项技术数据及其他，可供用户参考使用，如有技术改进，恕不另行通知。
注：a.选择带无级变速器的机型，为充分显示本机型的优良特性，常用转速应选择在变速范围中间值。
b.订货时请尽量选择本目录内的标准产品，如有特殊要求请在合同上详细说明。

Notices in speed reducer (speed changer)procurement

1. Main unit name:_____
2. Purpose of speed reducer in main unit
3. Operating conditions: Temperature___℃
4. Working time every day_____.
5. Motor type_____ ; Power _____ KW; Voltage____V;Input rotating speed____r/min;Frequency____HZ
6. Transmission ratio____;Output spindle rotation speed____r/min
7. Maximum(torque)load allowed on speed reducer____N.m
8. Type of speed reducer (fill in types as specified)_____
9. Coupling method between speed reducer and motor_____
10. Quantity required_____.Expeced delivery date___year____month____day.
11. When a user places an order, the two parties shall sign a national uniform-pattern contract, which comes into effect after being signed, and the two parties shall implement according to relevant provisions in Contract Law of the People's Republic of China.
12. Before signing a contract, please read all technical parameters, application range and expression of types, including installation patterns, motors attached or not, speed reduction ratio, motor power, torque and so on, To products directly coupled with motors, besides motor power, motor type, phase number(motor) and stage number (rotation number) shall be specified, otherwise, we will provide 3-phase& 4-stage AC motors for all.
13. Users shall try to select the types manufactured by our company, Special orders are available for special speed reduction ratio, transmisson ratio and motors, and our company can design and manufacture for users.
14. All technical parameters and other information in this document ate for user's reference ,and we will not otherwise when any technical improvements ate made.

Note: a. When selecting the machine model with stepless speed variator, in order to fully represent the escellent properties of this model of machine, generally, the rotary speed shall be the middle calue within the speed cariation range.
b. When ordering, please try to select the standard products in the catalogue. If there is any special requirement, please notify it in the contract.

备忘录

浙江午马传动有限公司
ZHEJIANG WUMA DRIVE CO.,LTD.

地址/Add:
浙江省丽水市青田县东源镇项村工业区10号
No. 10, Xiangcun Industrial Zone, Dongyuan Town,
Qingtian County, Lishui City, Zhejiang, China
323900

销售部/Domestic Sales Department:
0578-6933687/0578-6933677
外贸部/Foreign Trade Department:
0577-56782096

E-mail: wuma@zjwuma.com
zjwuma@zjwuma.com

www.zjwuma.com
www.wumadrive.com