WUMA 午马传动

Worm Gearbox Selection Catalogue

蜗轮蜗杆减速机目录册

2026B

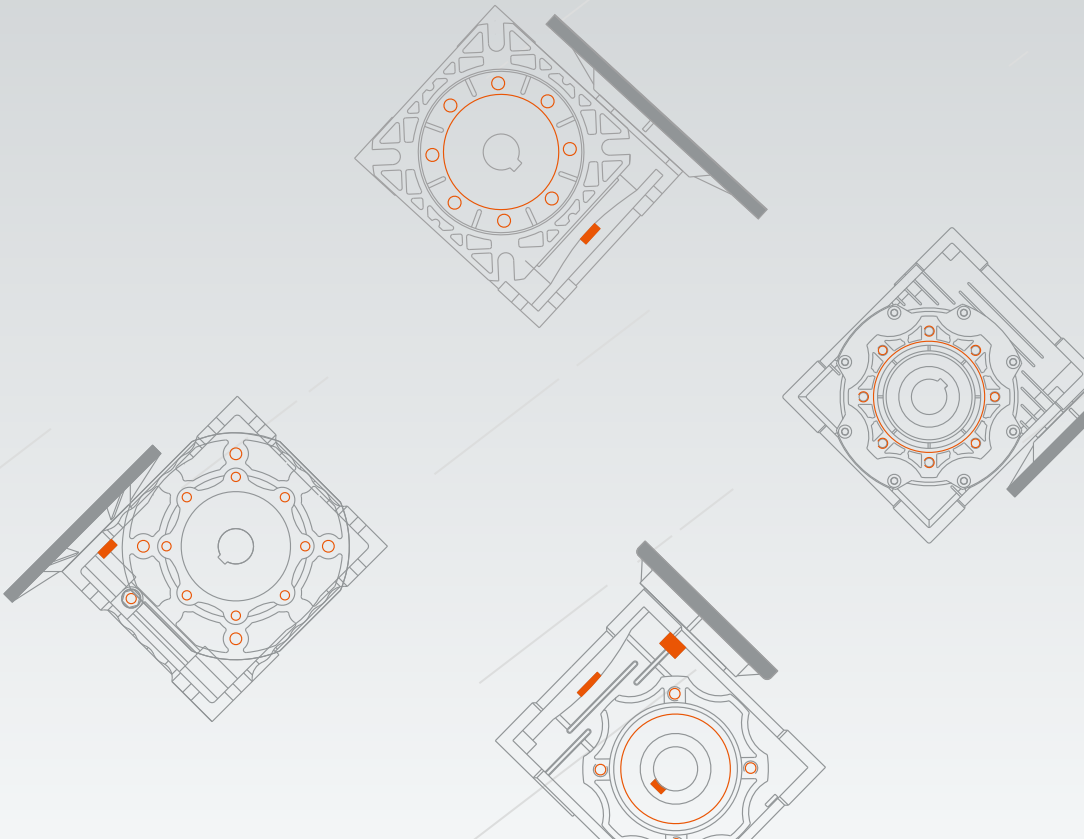

SINCE 1995

RELIABLE MOTION

SMARTER FUTURE



面积 Area **60,000㎡**

历史 Experience **30+**

技术人员 Technicians **30+**

员工 Employees **300+**

年产量 Annual Output Units **800,000**

浙江午马传动有限公司前身为浙江午马减速机有限公司，经营发展渊源可追溯至1995年；
历经三十余年发展，已成长为专注于减速机与精密传动领域的专业制造商。2021年，公司完成主体升级，成立浙江午马传动有限公司，延续"午马(WUMA)"品牌发展体系，迈入智能制造与高质量发展新阶段。
目前，公司拥有员工300余人、生产面积60000平方米，年产各类减速机50万余台。围绕工业传动应用需求，形成以RV系列蜗轮蜗杆减速机、R/K/F/S系列硬齿面斜齿轮减速机、准双曲面减速机等为核心的系列化、模块化产品体系，等10余个产品系列、数千种规格型号，广泛服务于食品包装、环保设备、仓储物流、智能制造等行业。
依托数字化制造体系、精密加工能力和完善的质量管理体系，公司持续提升全链条品牌服务能力;深耕海外市场超25年，产品远销全球80个国家，围绕"1+N"中国数字化制造中心+全球模块化组装中心的经营模式，构建全球协同的制造与交付网络，从产品出海迈向品牌出海。未来，午马传动将持续深化技术创新与智能制造升级，以可靠传动赋能高效生产，致力于打造一流的中国减速机出口企业与一流的中国减速机品牌——可靠传动，智启未来。

ZHEJIANG WUMA DRIVE CO.,LTD., formerly known as ZHEJIANG WUMA REDUCER CO., LTD., traces its business development back to 1995;
After over three decades of development, the company has grown into a professional manufacturer specializing in the field of reducers and precision transmissions. In 2021, the company underwent a major transformation, establishing ZHEJIANG WUMA DRIVE CO.,LTD. It continues to develop under the "WUMA" brand, marking a new stage in its journey towards intelligent manufacturing and high-quality growth.
Currently, the company employs over 300 staff members and occupies a production area of 60,000 square meters, with an annual output of over 500,000 various types of reducers. Focusing on the needs of industrial transmission applications, the company has established a serialized and modular product system centered around the RV series worm gear reducers, R/K/F/S series hardened tooth surface helical gear reducers, and hypoid reducers, among other products. With over 10 product series and thousands of specifications and models, the company serves a wide range of industries including food packaging, environmental protection equipment, warehousing and logistics, and intelligent manufacturing.
Relying on a digital manufacturing system, precision machining capabilities, and a comprehensive quality management system, the company continuously enhances its full-chain brand service capabilities. With over 25 years of deep exploration in overseas markets, its products are exported to 80 countries worldwide. Centered around the "1+N" business model of China Digital Manufacturing Center + Global Modular Assembly Center, the company has built a globally collaborative manufacturing and delivery network, transitioning from product export to brand export. Looking ahead, Wuma will continue to deepen technological innovation and intelligent manufacturing upgrades, empowering efficient production with reliable transmission, and striving to build a first-class Chinese reducer export enterprise and a first-class Chinese reducer brand - Reliable Transmission, intelligently ushering in the future.







使命 MISSION

让传动更可靠，让生产更高效

愿景 VISION

成为全球一流的智能传动方案引领者

价值观 VALUES

共创共享
Win-win Together
精益求精
Ultimate Excellence

至诚至信
Mutual Trust
使命必达
Accountability



午马传动智能数字化车间以工业 4.0 技术为核心，构建了一个高效、精准且环保的现代化生产体系。车间采用了高度自动化的生产线，整合了 AGV 无人搬运系统、德马吉、马扎克等精密加工设备，实现从原材料到成品的智能化生产，并通过物联网传感器实时收集设备状态和工艺数据，结合 PLM 与 MES 系统集成，实现了生产调度的动态优化，从而将生产线切换时间缩短了 40 %，质量缺陷率降低了 30%。

Wuma Drive's intelligent digital workshop takes Industry 4.0 technology as its core and builds an efficient, precise and environmentally friendly modern production system. The workshop uses a highly automated production line, integrates AGV unmanned handling systems, DMG and Mazak precision processing equipment, and realizes intelligent production from raw materials to finished products. It also collects equipment status and process data in real time through IoT sensors, and combines PLM and MES system integration to achieve dynamic optimization of production scheduling, thereby shortening the production line switching time by 40% and reducing the quality defect rate by 30%

DMG 德玛吉 卧式箱体加工中心	**LG-MAZAK** 马扎克 箱体加工中心
MITSUBUSHI 三菱 滚齿机	**TSUGAMI** 津上 精加工车床
HEADMAN 海德曼 精加工车床	**TOMAN** 陀曼 滚齿机



Smart Workshop
智能化车间











QUALITY









Digital Factory
数字化工厂



Contents 目录

1 Rv系列蜗杆减速机 P01
RV Series worm reducer

1.1 标准型RV系列蜗杆减速机 P01
Standard type Rv series worm reduer

1.2 WMRV系列蜗杆减速机与MB、MBN系列 P32
无极变速机（基本型）组合型
WMRV series the technical date of unit which is consisted of
Worm micro reducer and MB,MBN series variator (basic type)

1.3 PC系列齿轮减速机及PC+WMRV组合型齿轮-蜗杆减速机 P38
Structural Performance of PC Serial Gear Reducer

2 MB、MBN系列行星锥盘无极变速机及其（基本型） P51
与X系列摆线针轮减速机的组合型
MB,MBN series planetary cone-disk variator
and X series cyclod combined reducer

3 WB 系列微型摆线针轮减速机 P81
WB series cycloid reducer

4 X、B、JXJ 系列摆线针轮减速机 P87
X、B、JXJ series cycloid reducer

6 减(变)速机订货须知 P103
Notices in speed reducer (speed changer) procurement

RV SERIES

worm reducer

RV 系列蜗杆减速机

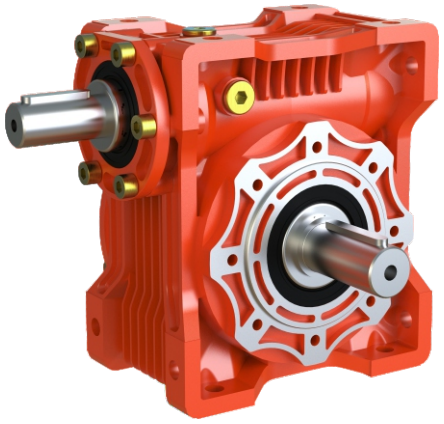





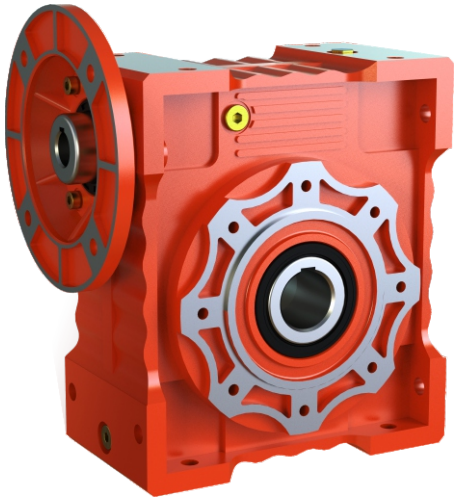



RV系列蜗杆减速机 RV Series Worm Reducer

蜗杆减速机性能特点
The advantages of worm reducer

1. 方箱外形，优质铝合金压铸箱体，美观大方。
2. 散热性能优良，承载能力大。
3. 多面安装，空心输出轴结构，另配有各种输入，输出方式，并能方便的与其他传动机械组合，适应性强。
4. 机型小巧，结构紧凑，体积小，重量轻，节省安装空间。
5. 传动平稳，噪音小。
6. 安全可靠.经济耐用。

1 . High quality Aluminum alloy ,appearance elegant, efficient thermally, high load carrying capacity.
2. Installed in multi-surfaces,hollow output shaft, various type of input and output end accessories.
3. Strong adaptability: easily combined with other transmission machinery
4. Compact structure, small size, light weight and save space for mounting.
5. Stable operation and low noise.
6. High reliability and high efficiency.

产品结构图
Basic structure

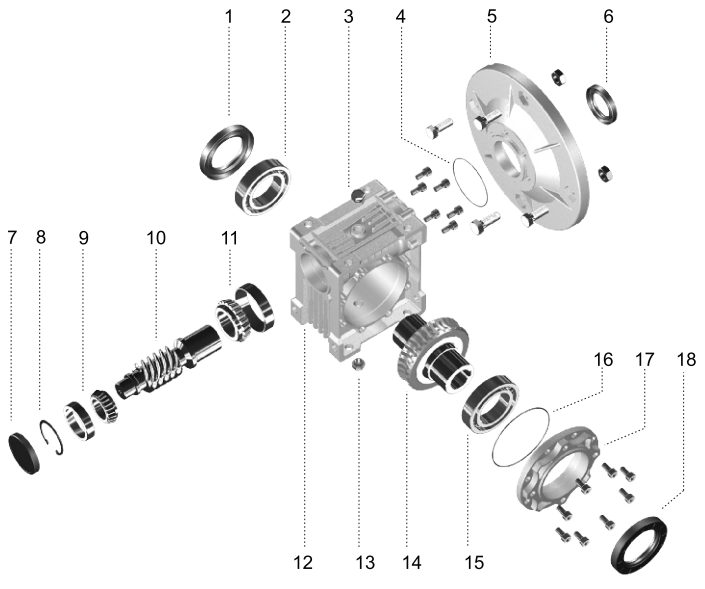

序号	名称		Name
1	油封	1	Oil seal
2	轴承	2	Bearing
3	通气帽	3	vent cap
4	O型密封圈	4	O-type seal ring
5	输入法兰	5	Input flange
6	油封	6	Oil seal
7	密封端盖	7	Seal cover
8	孔用弹性挡圈	8	Circlip
9	轴承	9	Bearing
10	蜗杆	10	Worm shaft
11	轴承	11	Bearing
12	箱体	12	Housing
13	螺塞	13	Plug screw
14	蜗轮	14	Worm gear
15	轴承	15	Bearing
16	O型密封圈	16	O-type seal ring
17	轴承端盖	17	Bearing cover
18	油封	18	Oil seal

标记方式 Model designation

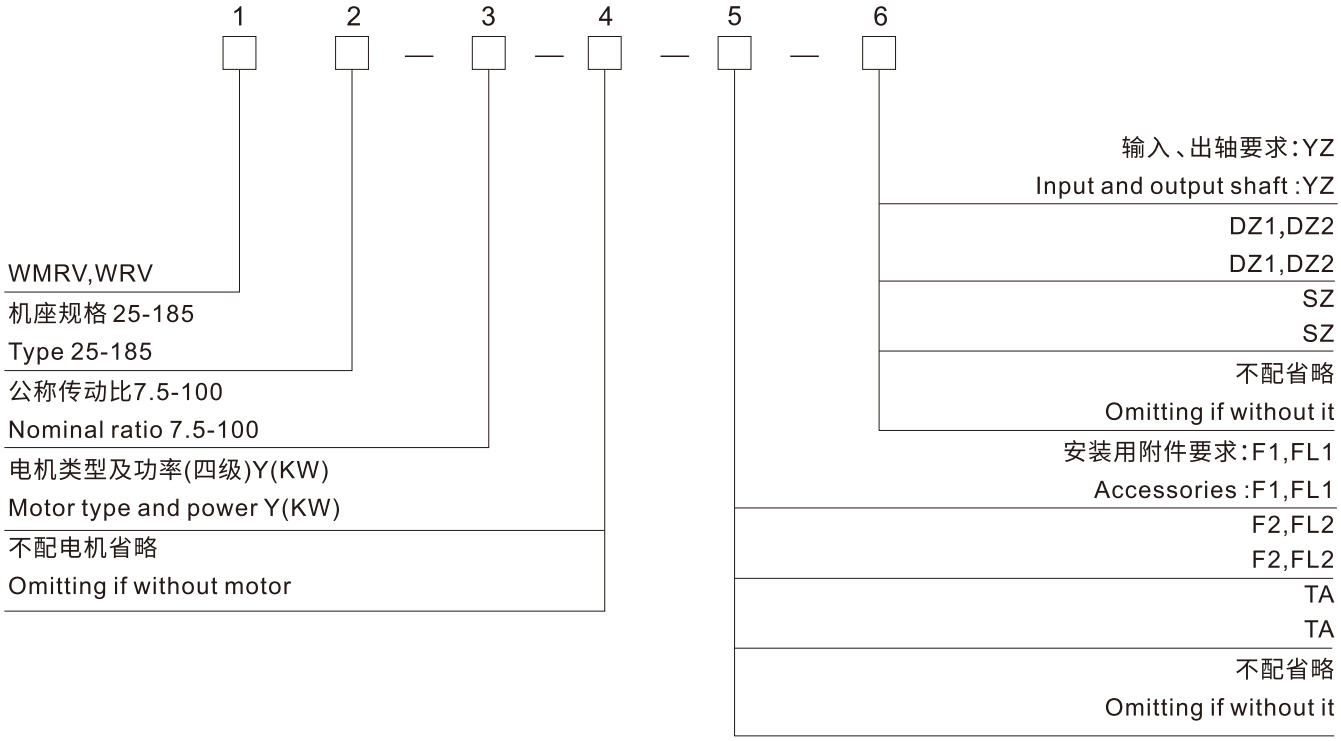

代号标记注解
Sign Explanation

WMRV	带输入法兰式减速机(配合电机使用) With input flange (using with electric motor)
WRV	输入轴式减速机 With input shaft
25-30-40-50-63-75-90-110-130-150-185	减速机的机座规格(中心距参数) Type(centre distance)
7.5-10-15-20-25-30-40-50-60-80-100	公称传动比 Nominal ratio
Y0.18	配普通Y系列电动机,功率为0.18KW With electric motor in series Y, the power is 0.18KW
YEJ0.18	配制动电机,功率为0.18KW With breaking motor, the power is 0.18KW
F.....(1-2).FL.....(1-2)	输出法兰及安装型式(F-输出短法兰,FL-输出长法兰) Output flange and mounting position (F- short output flange. FL- long output flange)
TA	转矩臂 With torque arm
YZ	配延伸蜗杆轴 With extension worm shaft
DZ1,DZ2	配单向输出轴 With single output shaft
SZ	配双向输出轴 With double output shaft

图1
(Chart 1)

WMRV.....

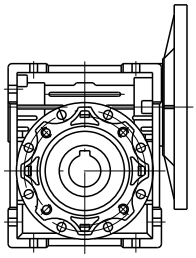

WMRV.....YZ

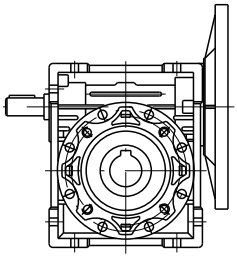

.....TA

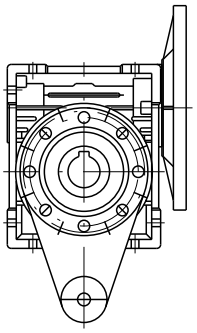

WRV.....

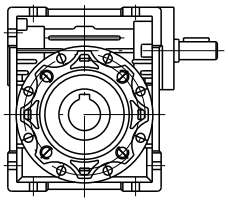

WRV.....YZ

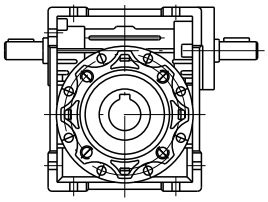

.....F1,FL1

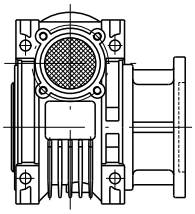

.....F2,FL2

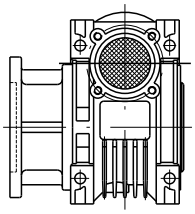

.....DZ1

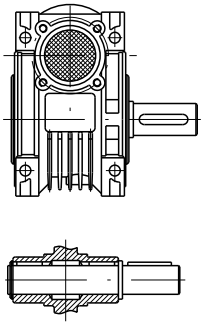

.....DZ2

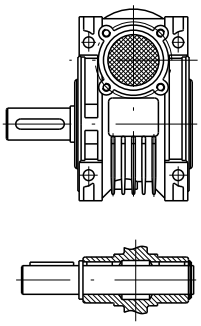

.....SZ

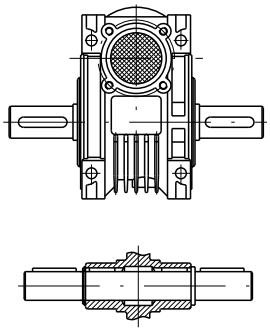

联体组合式RV系列蜗杆减速机标记方式：
Indication for combination RV series worm speed reducer

□ □ / □ – □ – P – □ – □ – □

输入、出轴要求:YZ、DZ1、DZ2、SZ;不配省略
Input/output shaft tequirement:YZ、DZ1、DZ2、SZ;omitting if not required.
安装附件要求:F1、F2、FL1、FL2、TA;不配省略
Required accessaries,F1、F2、FL1、FL2、TA;omitting if not required.
安装形式
Mounting type
配电机类型及功率:不配省略(配输入法兰应注明)P为电机极数,4极时省略。
Motor type and power ,omitting if not required.(indicated when input flange required) P:motor pole number,4 poles omitted.
机组公称传动比
Nominal ratio for combination sets
规格(前为第一级机座号/后为第2级机座号)
Size (Primary Unit / Secondary Unit)
类型:WMRV、WRV
Type: WMRV、WRV

安装方式及代号
Mounting type and codes

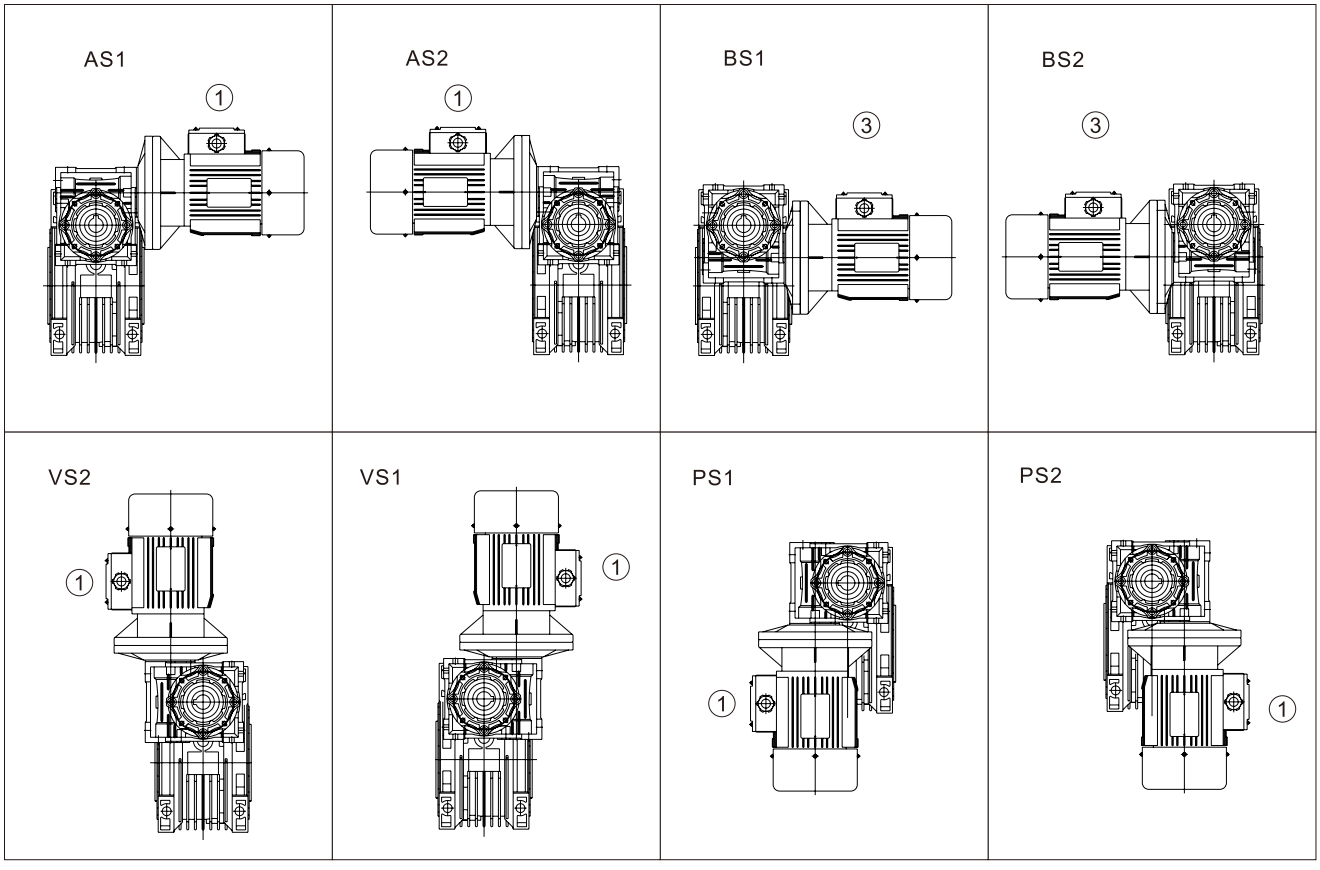

标记 I 示例 Examples:

1.WMRV40-30-Y0.18-F1-SZ
意为:WMRV型，机座规格40，公称传动比30，配Y系列0.18KW电机、F1输出法兰、双输出轴

1.WMRV40-30-Y0.18-F1-SZ
Means:
Model: WMRV size:40
Nominal ratio:30
With electric motor:0.18KW in series Y
Output flange:F1
Double output shaft: SZ

2.WRV40-30-F1
意为:WRV型 机座规格40，公称传动比30，不配电机，配输出法兰F1

2.WRV40-30-F1
Means:
Model:WRV size:40
Nominal ratio:30
Without electric motor
Output flange:F1

使用维护要求 The necessity of utilizing and maintaining

1. 安装时请不要对减速机输出部件，箱体施加压力，联接时请满足机器（械）与减速机之间的同轴度与垂直度的相应要求。
2. 减速机初始运行至400小时应重新更换润滑油，其后的换油周期约为4000小时。
3. 箱体内应保留足够的润滑油量，并定时检查。当发现油量减少或油质变坏时应及时补足或更换润滑油。
（润滑油牌号见附表）
4. 应注意保持减速机外观清洁，及时清除灰尘、污物以利于散热。

1. Do not make pressure on output part and box when mounting it ,
2. It must replace lubrication oil after it runs 400 hours when first using it ,after it , replace lubrication oil per running 4000 hours.
3. It must keep coaxial degree and vertical degree in just lever when conjoining reducer with other device .
4. Must keep plenty of oil lubrication in the reducer and check it often.
Must add or replace in time when oil reduce or get bad. (lubrication type see attached table)
It is useful to keep reducer clean so that reducer radiates warmth more efficiently.

减速机的安装式及对应的加油量、润滑油品种
Mounting position of reducer and the corresponding oil filling amount and lubricant varieties

1.安装位置 Mounting Position　○ 注:···加油孔及通气孔 Oil filling hole and air hole　◒···视油镜 Oil level view glass　●···排油塞 Oil drain plug

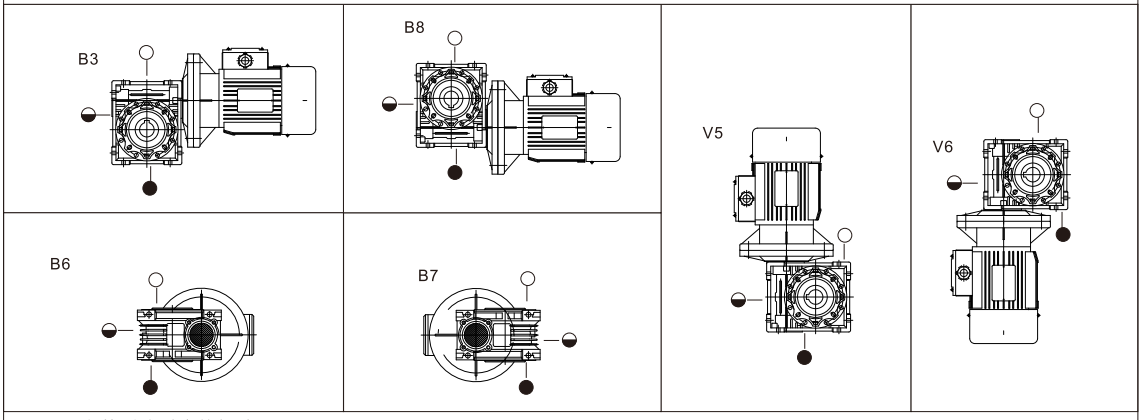

2.不同安装型式对应的加油量 Oil quantities against different mounting positions

蜗杆减速机型号 Types of worm speed reducers		RV25	RV30	RV40	RV50	RV63	RV75	RV90	RV110	RV130	RV150	RV185
润滑用油（公升）Lubricating oil	B3	0.02	0.03	0.08	0.15	0.3	0.55	1.0	3.0	5.0	7.0	11
	B6.B7								2.5	3.5	5.4	8.0
	B8											
	V5						0.75	1.25	3.5	5.5	7.5	11
	V6											

3.润滑油品种 Lubricating oil

蜗杆减速机型号 Types of worm speed reducers		RV25,RV30,RV40,RV50,RV63,RV75	RV90,RV110,RV130,RV150,RV185		
	润滑油 Lubricant	Synthetic Oil	Synthetic Oil	Mineral Oil	
	环境温度 Ambient Temperature	-25°C~+50°C	-25°C~+50°C	-5°C~+40°C	-15°C~+40°C
ISO		VG320	VG320	VG460	VG320
国内使用 Used in interior		WA460	WA460		
国外使用 Used in Foreign countries	AGIP	TELIUM VSF320	TELIUM VSF320	BLASIA 460	BLASIA 220
	SHELL	TIVELA S320	TIVELA S320	OMALA OIL 460	OMALA OIL 220
	ESSO	S220	S220	SPARTAN EP 460	SPARTAN EP 220
	MOBIL	GLYGOYLE 30	GLYGOYLE 30	MOBIL GEAR 634	MOBIL GEAR 630
	CASTROL	ALPHASYN PG 320	ALPHASYN PG 320	ALPHA MAX 460	ALPHA MAX 220
	BP	ENERGOL SG-XP 320	ENERGOL SG-XP 320	ENETGOL SG-XP 460	ENETGOL SG-XP 220

减速机的输出法兰 "F、FL"、输出轴 "DZ、SZ" 安装形式
Installation Position of Output flange(F,FL), Output Shaft(DZ,SZ) of Gearboxes

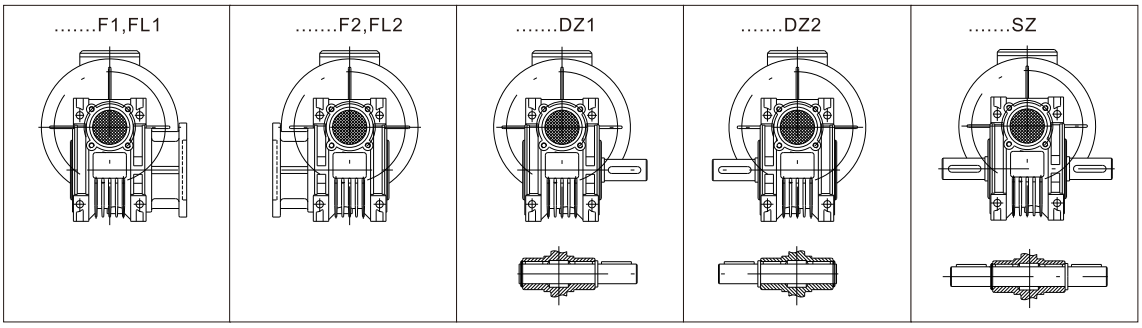

电机接线盒安装形式 Position of Motor Terminal Box

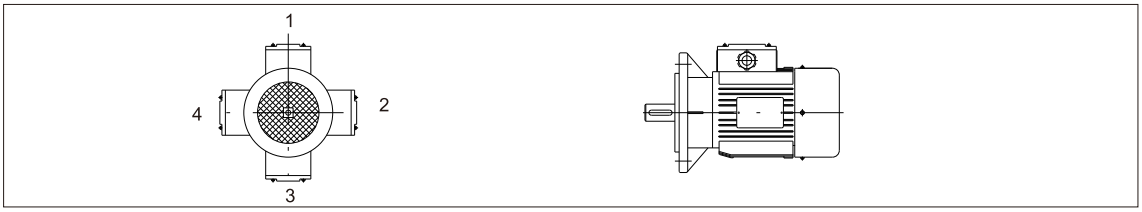

减速机的承载能力 Load carrying capacity of worm gearbox

附表 (Attached table)

蜗杆分度圆滑动速度(m/s) Reference circle of worm slide(m/s)	蜗轮蜗杆油牌号 Lubricant Grade
⩽ 2.2	G-N680W(G-N460W)
> 2.5-5	G-N320W
> 5-12	G-N220W

根据表2及表3，可找出有关减速机的工作系数(sf)
By table 2 and 3,selection criteria to find out service factor of worm gearbox.

表2
(Table 2)

每小时断性操作次数少于10次 NO of starts per hour <10			
加于减速机的负荷性质 Nature of load generated by driven machine	每日工作时数 Hours running per day		
	< 2	2~8	8~16
带均衡负荷 Uni form	sf=0.8	sf=1	sf=1.25
带中级震荡 Moderate shock	sf=1	sf=1.25	sf=1.5
带重级震荡 heavy shock	sf=1.25	sf=1.5	sf=1.75

表 3
(Table 3)

每小时间断性或连续性操作次数大于10次 NO of starts per hour>10			
加于减速机的负荷性质 Nature of load generated by driven machine	每日工作小时数 Hour running per day		
	< 2	2~8	8~24
带均衡负荷 Uni form	sf=1	sf=1.25	sf=1.75
带中级震荡 Moderate shock	sf=1.5	sf=1.75	sf=2
带重级震荡 heavy shock	sf=1.75	sf=2	sf=2.25

选型参数
Parameter Selections

单级减速机(法兰输入，输入转速1400r/min)/(配4级电机)
Selection Parameter of Single Stage Worm Gear Reducer (Input Speed 1400 rpm, 4 Pole)

输出转速 Output speed (r/min)	输出转矩 Output torque (N.m)	使用系数 Service Factor	传动比 Ratio (i)	机型号 Type
0.06KW				
186.7	2.6	4.2	7.5	WMRV25
140	3.4	3.5	10	
93.3	4.9	2.5	15	
70	6.1	2.0	20	
46.7	8.2	1.6	30	
35	10	1.3	40	
28	12	0.9	50	
23.3	14	0.7	60	
186.7	2.6	6.9	7.5	WMRV30
140	3.4	5.4	10	
93.3	4.7	3.8	15	
70	6	3.0	20	
56	7	3.0	25	
46.7	8	2.5	30	
35	9.7	1.9	40	
28	11	1.5	50	
23.3	13	1.3	60	
17.5	14	0.9	80	
0.09KW				
186.7	3.9	2.8	7.5	WMRV25
140	5.1	2.4	10	
93.3	7.3	1.6	15	
70	9.2	1.3	20	
46.7	12	1.1	30	
35	15	0.9	40	
186.7	3.9	4.6	7.5	WMRV30
140	5	3.6	10	
93.3	7.1	2.5	15	
70	9	2.0	20	
56	10	2.0	25	
46.7	12	1.7	30	
35	14	1.2	40	
28	17	1.0	50	
23.3	19	0.9	60	
28	19	2.0	50	WMRV40
23.3	21	1.7	60	
17.5	26	1.3	80	
14	29	1.0	100	
0.12KW				
186.7	5.2	3.4	7.5	WMRV30
140	6.7	2.7	10	
93.3	9.5	1.9	15	
70	12	1.5	20	
56	14	1.5	25	
46.7	16	1.3	30	
35	19	0.9	40	
28	23	0.8	50	

输出转速 Output speed (r/min)	输出转矩 Output torque (N.m)	使用系数 Service Factor	传动比 Ratio (i)	机型号 Type
0.12KW				
46.7	17.2	2.6	30	WMRV40
35	21	1.9	40	
28	25	1.5	50	
23.3	28	1.3	60	
17.5	34	1.0	80	
14	38	0.8	100	
23.3	29	2.3	60	WMRV50
17.5	35	1.9	80	
14	40	1.4	100	
0.18KW				
186.7	7.8	2.3	7.5	WMRV30
140	10	1.8	10	
93.3	14	1.3	15	
70	18	1.0	20	
56	21	1.0	25	
46.7	24	0.8	30	
70	19	2.0	20	WMRV40
56	23	1.7	25	
46.7	26	1.7	30	
35	32	1.3	40	
28	38	1.0	50	
23.3	43	0.8	60	
35	32	2.3	40	WMRV50
28	39	1.9	50	
23.3	43	1.6	60	
17.5	52	1.2	80	
14	60	0.9	100	
0.25KW				
186.7	11	3.6	7.5	WMRV40
140	14	2.8	10	
93.3	21	1.9	15	
70	27	1.5	20	
56	32	1.2	25	
46.7	36	1.3	30	
35	44	0.9	40	
28	47	0.8	50	
70	26	2.7	20	WMRV50
56	32	2.2	25	
46.7	37	2.3	30	
35	46	1.7	40	
28	54	1.4	50	
23.3	60	1.1	60	
17.5	72	0.9	80	

输出转速 Output speed (r/min)	输出转矩 Output torque (N.m)	使用系数 Service Factor	传动比 Ratio (i)	机型号 Type
0.25KW				
28	56	2.4	50	WMRV63
23.3	63	2.0	60	
17.5	78	1.6	80	
14	87	1.4	100	
0.37KW				
186.7	16	2.4	7.5	WMRV40
140	21	1.9	10	
93.3	31	1.3	15	
70	39	1.0	20	
56	47	0.8	25	
46.7	53	0.8	30	
140	21	3.3	10	WMRV50
93.3	31	2.4	15	
70	40	1.8	20	
56	48	1.5	25	
46.7	55	1.5	30	
35	68	1.1	40	
28	80	0.9	50	
23.3	89	0.8	60	
35	70	2.1	40	WMRV63
28	83	1.6	50	
23.3	94	1.4	60	
17.5	115	1.1	80	
14	129	0.9	100	
0.55KW				
186.7	25	2.9	7.5	WMRV50
140	32	2.2	10	
93.3	46	1.6	15	
70	59	1.2	20	
56	71	1.0	25	
46.7	81	1.0	30	
35	80	0.9	40	
70	60	2.2	20	WMRV63
56	73	1.8	25	
46.7	83	1.9	30	
35	105	1.4	40	
28	124	1.1	50	
23.3	140	0.9	60	
35	108	2.0	40	WMRV75
28	129	1.6	50	
23.3	146	1.4	60	
17.5	180	1.1	80	
14	206	0.9	100	
17.5	189	1.5	80	WMRV90
14	221	1.2	100	

输出转速 Output speed (r/min)	输出转矩 Output torque (N.m)	使用系数 Service Factor	传动比 Ratio (i)	机型号 Type
0.75KW				
93.3	63	1.2	15	WMRV50
70	81	0.9	20	
93.3	63	2.2	15	WMRV63
70	83	1.6	20	
56	100	1.3	25	
46.7	114	1.4	30	
35	143	1.0	40	
56	102	2.0	25	WMRV75
46.7	117	2.0	30	
35	147	1.5	40	
28	177	1.2	50	
23.3	200	1.0	60	
28	184	1.8	50	WMRV90
23.3	212	1.5	60	
17.5	258	1.1	80	
14	302	0.9	100	
1.1KW				
186.7	49	2.6	7.5	WMRV63
140	65	2.0	10	
93.3	93	1.5	15	
70	122	1.1	20	
56	146	0.9	25	
46.7	167	1.0	30	
35	210	0.7	40	
93.3	95	2.1	15	WMRV75
70	123	1.7	20	
56	150	1.3	25	
46.7	171	1.3	30	
35	216	1.0	40	
28	264	0.9	50	
23.3	223	0.8	60	
35	225	1.6	40	WMRV90
28	270	1.3	50	
23.3	311	1.0	60	
17.5	328	0.9	80	
28	281	2.3	50	WMRV110
23.3	324	1.9	60	
17.5	402	1.3	80	
14	473	1.0	100	
1.5KW				
186.7	67	1.9	7.5	WMRV63
140	89	1.5	10	
93.3	127	1.1	15	
70	166	0.8	20	

输出转速 Output speed (r/min)	输出转矩 Output torque (N.m)	使用系数 Service Factor	传动比 Ratio (i)	机型号 Type
1.5KW				
140	90	2.2	10	WMRV75
93.3	130	1.5	15	
70	168	1.3	20	
56	205	1.0	25	
46.7	233	1.0	30	
70	171	2.1	20	WMRV90
56	210	1.6	25	
46.7	239	1.7	30	
35	307	1.2	40	
28	368	0.9	50	
23.3	424	0.8	60	
35	319	2.2	40	WMRV110
28	384	1.7	50	
23.3	442	1.4	60	
17.5	548	0.9	80	
17.5	555	1.5	80	WMRV130
14	655	1.1	100	
2.2KW				
186.7	100	1.8	7.5	WMRV75
140	132	1.5	10	
93.3	191	1.0	15	
70	240	0.9	20	
46.7	269	0.8	30	
186.7	101	2.9	7.5	WMRV90
140	134	2.3	10	
93.3	194	1.9	15	
70	252	1.4	20	
56	308	1.1	25	
46.7	351	1.2	30	
35	450	0.8	40	
70	255	2.5	20	WMRV110
56	315	2.2	25	
46.7	356	2.0	30	
35	468	1.5	40	
28	563	1.2	50	
23.3	648	1.0	60	
35	468	2.2	40	WMRV130
28	563	1.7	50	
23.3	648	1.4	60	
17.5	816	1.0	80	
14	869	0.8	100	
28	570	2.5	50	WMRV150
23.3	657	1.9	60	
17.5	816	1.4	80	
14	960	1.0	100	

输出转速 Output speed (r/min)	输出转矩 Output torque (N.m)	使用系数 Service Factor	传动比 Ratio (i)	机型号 Type
3KW				
186.7	136	1.4	7.5	WMRV75
140	180	1.1	10	
93.3	261	0.8	15	
186.7	138	2.1	7.5	WMRV90
140	182	1.7	10	
93.3	264	1.4	15	
70	344	1.0	20	
56	420	0.8	25	
46.7	479	0.9	30	
93.3	264	2.5	15	WMRV110
70	348	1.9	20	
56	430	1.6	25	
46.7	485	1.5	30	
35	638	1.1	40	
28	767	0.9	50	
56	429	2.2	25	WMRV130
46.7	491	2.1	30	
35	638	1.6	40	
28	767	1.3	50	
23.3	884	1.0	60	
17.5	1113	0.8	80	
28	777	1.8	50	WMRV150
23.3	896	1.4	60	
17.5	1113	1.0	80	
14	1310	0.8	100	
4KW				
186.7	182	1.0	7.5	WMRV75
140	240	0.8	10	
186.7	184	1.6	7.5	WMRV90
140	243	1.3	10	
93.3	352	1.0	15	
70	458	0.8	20	
140	242	2.5	10	WMRV110
93.3	352	1.9	15	
70	464	1.4	20	
56	573	1.2	25	
46.7	647	1.1	30	
56	573	1.6	25	WMRV130
46.7	655	1.6	30	
35	851	1.2	40	
28	1023	1.0	50	
23.3	1179	0.8	60	

输出转速 Output speed (r/min)	输出转矩 Output torque (N.m)	使用系数 Service Factor	传动比 Ratio (i)	机型号 Type
4KW				
28	1036	1.4	50	WMRV150
23.3	1195	1.1	60	
17.5	1484	0.8	80	
28	1019	2.3	50	WMRV185
23.3	1195	1.9	60	
17.5	1500	1.4	80	
14	1766	1.0	100	
5.5KW				
186.7	253	2.2	7.5	WMRV110
140	334	1.8	10	
93.3	484	1.4	15	
70	638	1.0	20	
56	711	0.9	25	
140	333	2.5	10	WMRV130
93.3	490	1.9	15	
70	645	1.4	20	
56	788	1.2	25	
46.7	900	1.2	30	
35	1171	0.9	40	
28	1103	0.8	50	
70	645	2.0	20	WMRV150
56	788	1.5	25	
46.7	934	1.3	30	
35	1171	1.3	40	
28	1426	1.0	50	
23.3	1643	0.8	60	
56	777	2.5	25	WMRV185
46.7	864	2.5	30	
35	1168	2.2	40	
28	1402	1.7	50	
23.3	1643	1.4	60	
17.5	2063	1.0	80	
7.5KW				
186.7	345	1.6	7.5	WMRV110
140	455	1.3	10	
93.3	660	1.0	15	
186.7	349	2.1	7.5	WMRV130
140	455	1.8	10	
93.3	668	1.4	15	
70	880	1.0	20	
56	1074	0.9	25	
46.7	1228	0.8	30	
35	1596	0.7	40	

输出转速 Output speed (r/min)	输出转矩 Output torque (N.m)	使用系数 Service Factor	传动比 Ratio (i)	机型号 Type
7.5KW				
70	880	1.5	20	WMRV150
56	1074	1.1	25	
46.7	1274	1.0	30	
35	1596	1.0	40	
56	1060	1.8	25	WMRV185
46.7	1179	1.9	30	
35	1593	1.6	40	
28	1911	1.2	50	
23.3	2240	1.0	60	
11KW				
186.7	512	2.3	7.5	WMRV150
140	675	1.8	10	
93.3	990	1.3	15	
70	1291	1.0	20	
56	1576	0.8	25	
93.3	922	1.9	15	WMRV185
70	1274	1.8	20	
56	1554	1.2	25	
46.7	1729	1.3	30	
35	2336	1.1	40	
28	2803	0.8	50	
15KW				
186.7	698	1.7	7.5	WMRV150
140	921	1.3	10	
93.3	1351	0.9	15	
70	1760	0.7	20	
93.3	1257	1.4	15	WMRV185
70	1737	1.3	20	
56	2120	0.9	25	
46.7	2357	0.9	30	
18.5KW				
93.3	1550	1.1	15	WMRV185
70	2143	1.0	20	
22KW				
93.3	1844	0.9	15	WMRV185
70	2548	0.9	20	

双级减速机(法兰输入,输入转速1400r/min)/(配4级电机)
Selection Parameter of Double Stage Worm Gear Reducer (Input Speed 1400 rpm, 4 Pole)

输出转速 Output speed (r/min)	输出转矩 Output torque (N.m)	使用系数 Service Factor	高速级传动比 High speed transmission ratio (i1)	低速级传动比 Low speed transmission ratio (i2)	总传动比 General transmission ratio (i)	组合机型规格 Combination model size
0.06KW						
14	25	1.3	10	10	100	25/30
9.3	32	0.9	10	15	150	
7	41	0.7	10	20	200	
5.6	44	0.8	10	25	250	
4.7	57	1.3	10	30	300	30/40
3.5	70	0.9	10	40	400	
2.8	96	0.6	20	25	500	
2.3	104	0.7	20	30	600	
1.9	121	0.6	25	30	750	
1.6	139	0.5	30	30	900	
1.2	166	0.4	30	40	1200	
0.9	196	0.4	50	30	1500	
0.78	218	0.3	60	30	1800	
0.58	261	0.2	60	40	2400	
0.4	300	0.2	80	40	3200	
0.4	279	0.1	50	80	4000	
0.28	338	0.1	50	100	5000	
1.6	141	1.0	30	30	900	30/50
1.2	169	0.7	30	40	1200	
0.93	199	0.7	50	30	1500	
0.78	222	0.7	60	30	1800	
0.6	266	0.5	60	40	2400	
0.5	307	0.4	60	50	3000	
0.35	288	0.3	50	80	4000	
0.29	311	0.3	60	80	4800	
0.9	203	1.1	30	50	1500	30/63
0.78	225	0.9	30	60	1800	
0.58	276	0.8	60	40	2400	
0.47	319	0.7	60	50	3000	
0.35	306	0.6	50	80	4000	
0.28	360	0.4	50	100	5000	
0.6	330	1.1	60	40	2400	40/75
0.47	377	0.8	60	50	3000	
0.35	355	0.7	50	80	4000	
0.28	419	0.5	50	100	5000	
0.5	405	1.4	60	50	3000	40/90
0.35	365	1.3	50	80	4000	
0.28	431	1.0	50	100	5000	
0.09KW						
14	37	0.8	10	10	100	25/30
9.3	49	0.6	10	15	150	
7	62	0.5	10	20	200	
5.6	66	0.5	10	25	250	

输出转速 Output speed (r/min)	输出转矩 Output torque (N.m)	使用系数 Service Factor	高速级传动比 High speed transmission ratio (i1)	低速级传动比 Low speed transmission ratio (i2)	总传动比 General transmission ratio (i)	组合机型规格 Combination model size
0.09KW						
4.7	75	0.4	10	30	300	25/30
3.5	107	0.3	10	40	400	
2.8	115	0.2	20	25	500	
2.3	135	0.2	20	30	600	
1.9	151	0.2	25	30	750	
1.6	178	0.2	30	30	900	
1.2	212	0.1	30	40	1200	
0.9	247	0.1	50	30	1500	
0.78	304	0.1	60	30	1800	
0.58	340	0.1	60	40	2400	
0.47	405	0.1	60	50	3000	
4.7	88	0.8	10	30	300	30/40
3.5	107	1.2	10	40	400	30/50
2.8	123	1.0	10	50	500	
2.3	159	0.9	20	30	600	
1.9	185	0.8	25	30	750	
1.6	212	0.7	30	30	900	
1.6	200	1.0	15	60	900	30/63
1.2	263	0.9	30	40	1200	
0.93	305	0.7	30	50	1500	
0.9	359	1.1	50	30	1500	40/75
0.78	404	1.0	60	30	1800	
0.58	496	0.7	60	40	2400	
0.5	608	0.9	60	50	3000	40/90
0.35	548	0.8	50	80	4000	
0.12KW			10			
4.7	118	1.2	10	30	300	30/50
3.5	142	0.9		40	400	
2.8	164	0.7	10	50	500	
2.8	171	1.3	10	50	500	30/63
2.3	208	1.1	15	40	600	
1.9	241	0.9	15	50	750	
1.6	324	1.2	30	30	900	40/75
1.2	399	0.9	30	40	1200	
0.78	546	0.9	30	60	1800	40/90
0.58	695	0.9	60	40	2400	

输出转速 Output speed (r/min)	输出转矩 Output torque (N.m)	使用系数 Service Factor	高速级传动比 High speed transmission ratio (i1)	低速级传动比 Low speed transmission ratio (i2)	总传动比 General transmission ratio (i)	组合机型规格 Combination model size
0.12KW						
0.5	883	1.2	60	50	3000	50/110
0.35	784	1.0	50	80	4000	
0.28	928	0.8	50	100	5000	
0.18KW						
3.5	221	1.0	10	40	400	30/63
2.8	257	0.8	10	50	500	
2.3	362	1.1	20	30	600	40/75
1.9	435	0.9	25	30	750	
1.6	487	0.8	30	30	900	
1.2	629	1.0	30	40	1200	40/90
0.93	735	0.8	30	50	1500	
0.78	860	1.5	60	30	1800	50/110
0.58	1113	1.1	60	40	2400	
0.25KW						
3.5	336	1.1	10	40	400	40/75
2.8	384	0.8	10	50	500	
2.3	511	1.2	15	40	600	40/90
1.9	598	0.9	15	50	750	
1.6	667	0.8	15	60	900	
1.2	943	1.3	30	40	1200	50/110
0.93	1064	1.2	50	30	1500	
0.78	1195	1.1	60	30	1800	
0.6	1624	1.0	60	40	2400	63/130
0.47	1935	0.8	60	50	3000	
0.35	2046	0.6	50	80	4000	
0.28	2430	0.5	50	100	5000	
0.78	1199	1.8	60	30	1800	63/150
0.6	1446	1.8	60	40	2400	
0.5	1713	1.4	60	50	3000	
0.4	2026	0.9	50	80	4000	
0.3	2251	0.7	50	100	5000	
0.37KW						
4.7	405	1.0	10	30	300	40/75
3.5	498	0.7	10	40	400	
4.7	401	1.5	7.5	40	300	40/90
3.5	523	1.2	10	40	400	
2.8	611	0.9	10	50	500	
2.3	757	0.8	15	40	600	
1.9	949	1.3	25	30	750	50/110
1.6	1079	1.2	30	30	900	
1.2	1396	0.8	30	40	1200	

输出转速 Output speed (r/min)	输出转矩 Output torque (N.m)	使用系数 Service Factor	高速级传动比 High speed transmission ratio (i1)	低速级传动比 Low speed transmission ratio (i2)	总传动比 General transmission ratio (i)	组合机型规格 Combination model size
0.37KW						
0.9	1674	1.1	50	30	1500	63/130
0.78	1887	0.9	60	30	1800	
0.78	1774	1.2	60	30	1800	63/150
0.6	2141	1.2	60	40	2400	
0.5	2535	0.9	60	50	3000	
0.55KW						
4.7	639	2.0	10	30	300	50/110
3.5	826	1.4	10	40	400	
2.8	984	1.1	10	50	500	
2.3	1181	1.0	15	40	600	
1.9	1411	0.9	25	30	750	
2.8	995	1.6	10	50	500	63/130
1.9	1470	1.2	25	30	750	
1.2	2132	0.8	30	40	1200	
0.78	2637	0.8	60	30	1800	63/150
0.6	3182	0.8	60	40	2400	
0.75KW						
4.7	871	1.5	10	30	300	50/110
3.5	1126	1.1	10	40	400	
2.8	1357	1.1	10	50	500	63/130
2.3	1631	1.0	15	40	600	
1.9	2005	0.9	25	30	750	
1.6	2283	0.8	30	30	900	
2.8	1290	1.8	10	50	500	63/150
2.3	1529	1.7	15	40	600	
1.9	1783	1.3	25	30	750	
1.6	2215	0.9	30	30	900	
1.2	2680	1.0	30	40	1200	
1.1KW						
4.7	1312	1.3	10	30	300	63/130
3.5	1671	1.0	10	40	400	
2.8	1991	0.8	10	50	500	
9.3	752	3.1	10	15	150	63/150
7	966	2.4	10	20	200	
5.6	1175	1.7	10	25	250	
4.7	1364	1.7	10	30	300	
3.5	1619	1.6	10	40	400	
2.8	1893	1.2	10	50	500	
2.3	2242	1.2	15	40	600	
1.9	2616	0.9	25	30	750	

输出转速 Output speed (r/min)	输出转矩 Output torque (N.m)	使用系数 Service Factor	高速级传动比 High speed transmission ratio (i1)	低速级传动比 Low speed transmission ratio (i2)	总传动比 General transmission ratio (i)	组合机型规格 Combination model size
1.5KW						
4.7	1789	1.0	10	30	300	63/130
3.5	2279	0.7	10	40	400	
9.3	1026	2.3	10	15	150	63/150
7	1317	1.8	10	20	200	
5.6	1602	1.3	10	25	250	
4.7	1860	1.3	10	30	300	
3.5	2208	1.2	10	40	400	
2.8	2582	0.9	10	50	500	
2.3	3057	0.9	15	40	600	

外形尺寸图 / OUTLINE DIMENSION SHEET

WMRV25

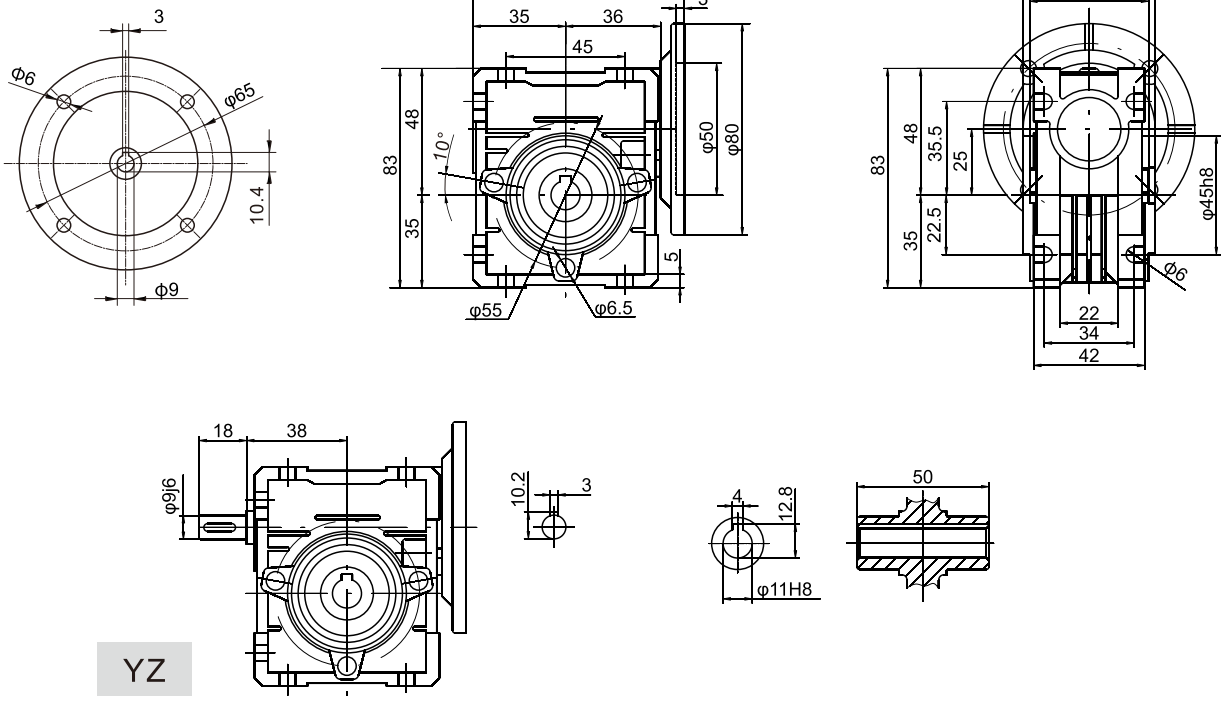

YZ

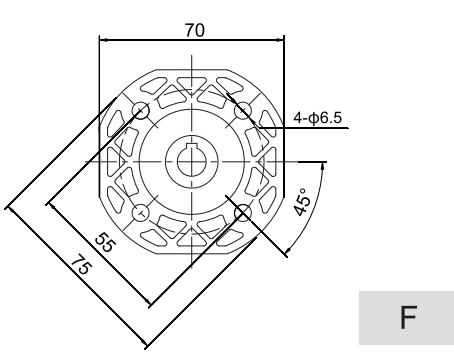

F

重量（不包含马达）≈0.8kg
Weight without motor ≈0.8kg

WMRV30

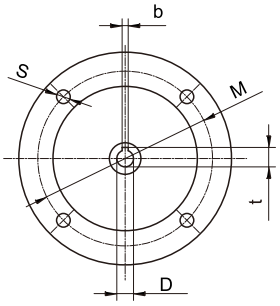

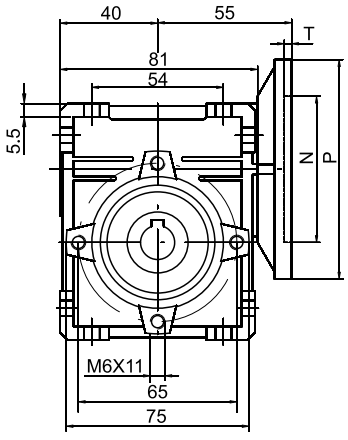

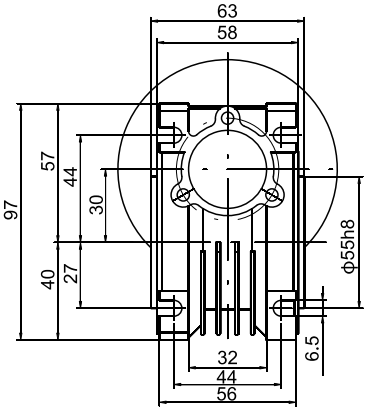

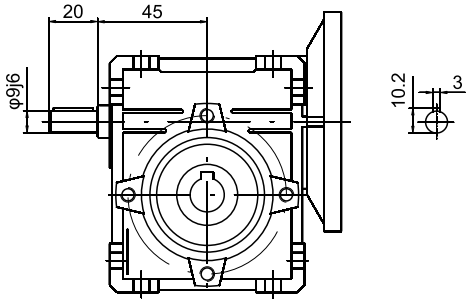

YZ

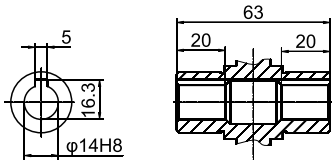

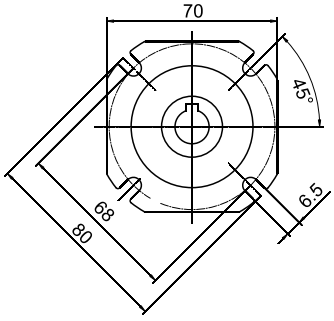

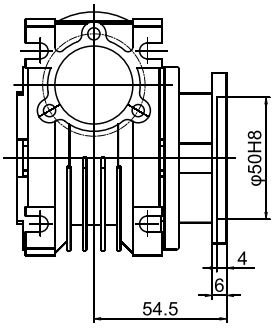

F

IEC	DE8	b	t	P	M	N	S	T
56B5	9	3	10.4	120	100	80	7	3.5
56B14	9	3	10.4	80	65	50	5.5	3
63B14	11	4	12.8	90	75	60	5.5	3
63B5	11	4	12.8	140	115	95	9	3.5

重量(不包含马达) ≈1.2kg
Weight without motor ≈1.2kg

WMRV40

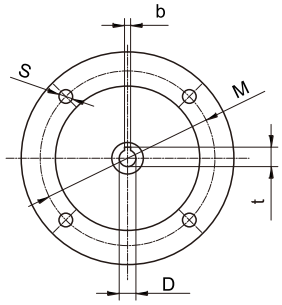

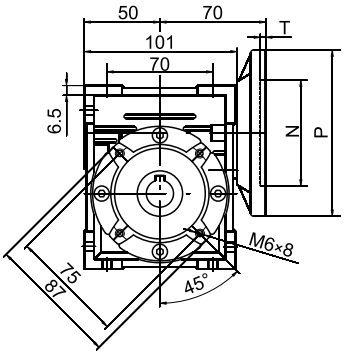

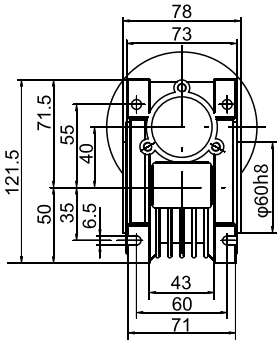

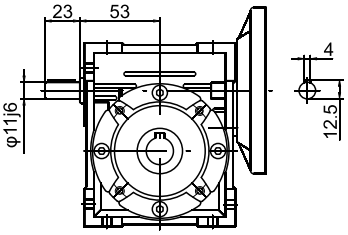

YZ

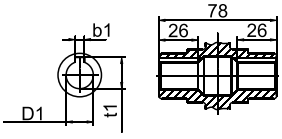

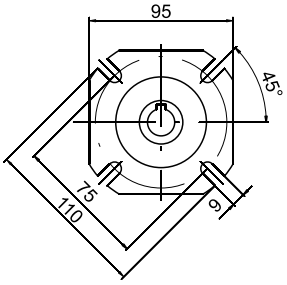

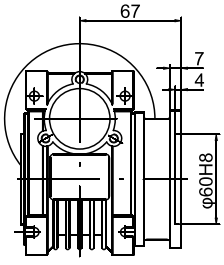

F

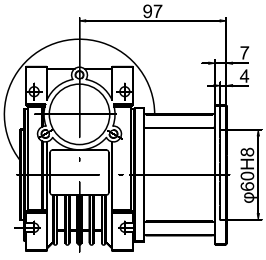

FL

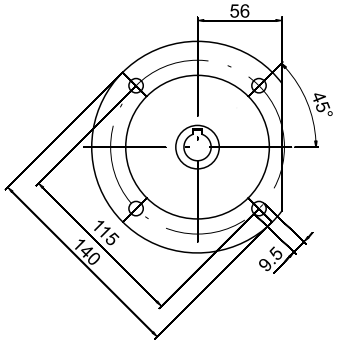

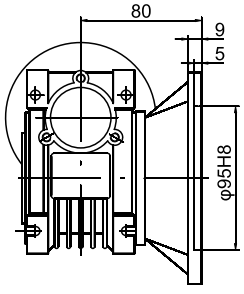

FC

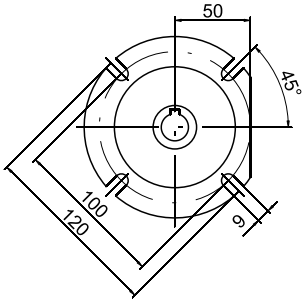

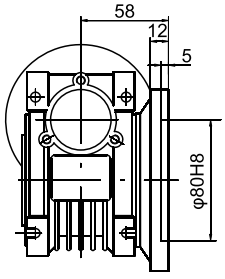

FD

IEC	D_{e8}	b	t	P	M	N	S	T
56B14	9	3	10.4	80	65	50	5.5	3
63B5	11	4	12.8	140	115	95	9	3.5
63B14	11	4	12.8	90	75	60	5.5	3
71B5	14	5	16.3	160	130	110	9	4
71B14	14	5	16.3	105	85	70	7	3

$D_{1\,H8}$	b_1	t_1
18	6	20.8
19*	6	21.8

* 非标产品，订单时请说明
* Only on request

重量（不包含马达）≈2.2kg
Weight without motor ≈2.2kg

WMRV50

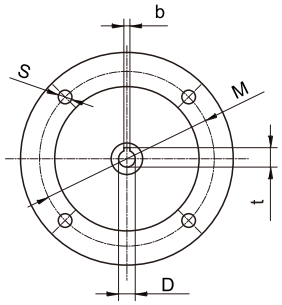

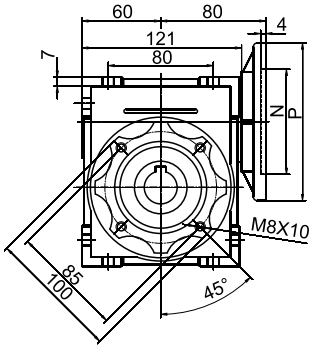

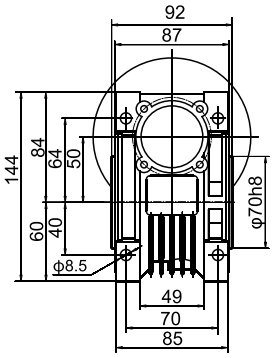

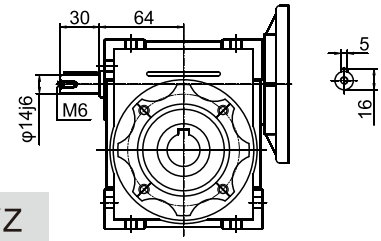

YZ

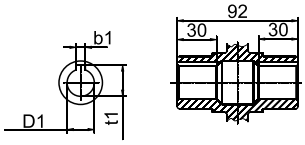

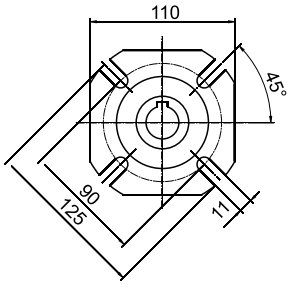

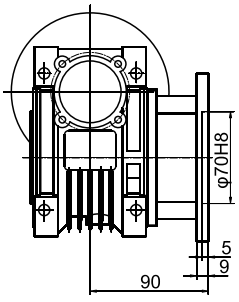

F

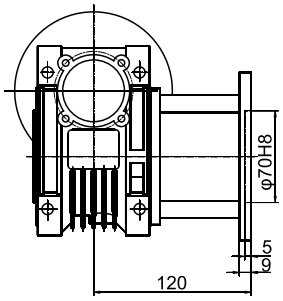

FL

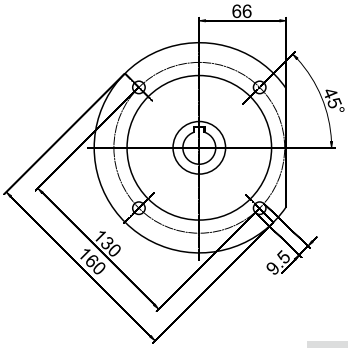

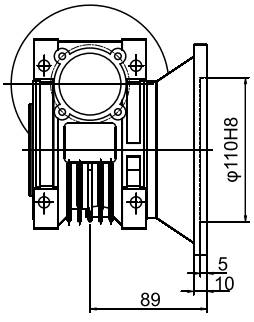

FC

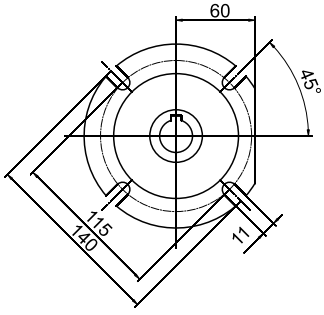

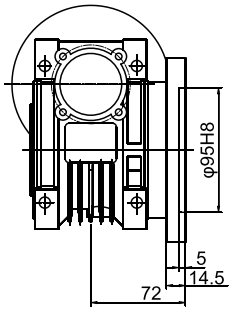

FD

IEC	D_{E8}	b	t	P	M	N	S	T
63B14	11	4	12.8	90	75	60	5.5	3
63B5	11	4	12.8	140	115	95	9	3.5
71B5	14	5	16.3	160	130	110	9	4
71B14	14	5	16.3	105	85	70	7	3
80B5	19	6	21.8	200	165	130	11	4
80B14	19	6	21.8	120	100	80	7	3.5

$D_{1\,H8}$	b_1	t_1
25	8	28.3
24*	8	27.3

* 非标产品，订单时请说明
* Only on request

重量（不包含马达）≈3.8kg
Weight without motor ≈3.8kg

WMRV63

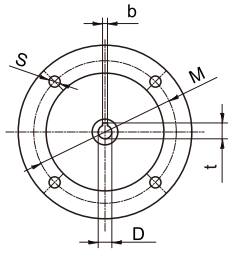

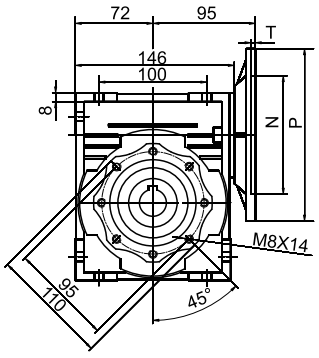

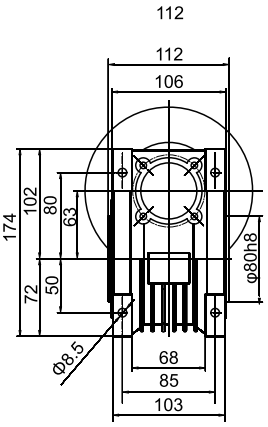

YZ

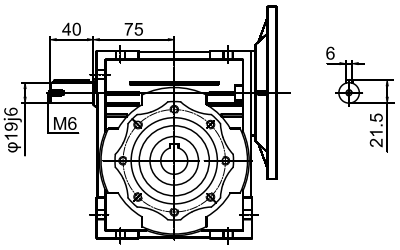

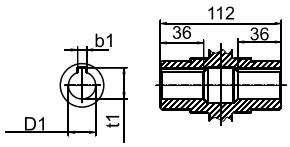

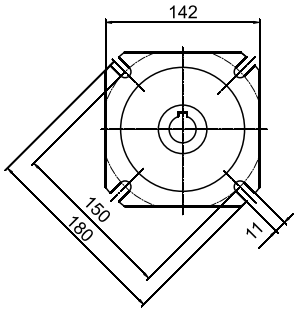

F

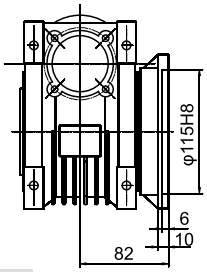

FL

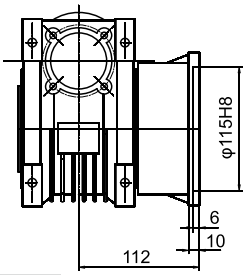

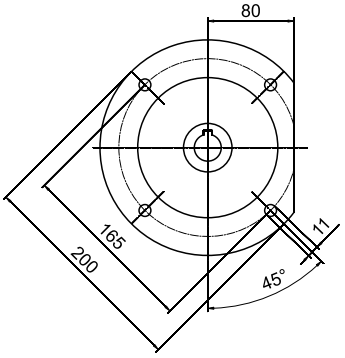

FC

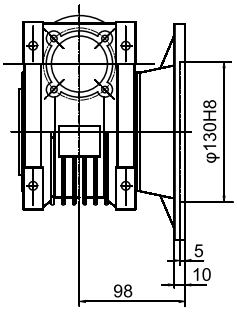

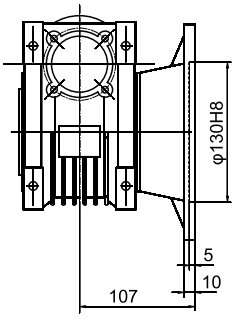

FD

重量(不包含马达) ≈6.2kg
Weight without motor ≈6.2kg

IEC	D_{E8}	b	t	P	M	N	S	T
71B5	14	5	16.3	160	130	110	9	4
71B14	14	5	16.3	105	85	70	7	3
80B5	19	6	21.8	200	165	130	11	4
80B14	19	6	21.8	120	100	80	7	3.5
90B5	24	8	27.3	200	165	130	11	4
90B14	24	8	27.3	140	115	95	9	3.5

$D_{1\,H8}$	b_1	t_1
25	8	28.3
28*	8	31.3

* 非标产品，订单时请说明
* Only on request

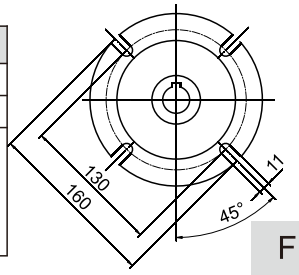

FE

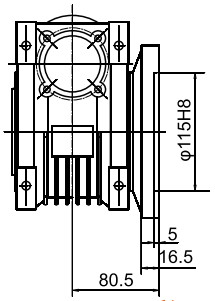

WMRV75

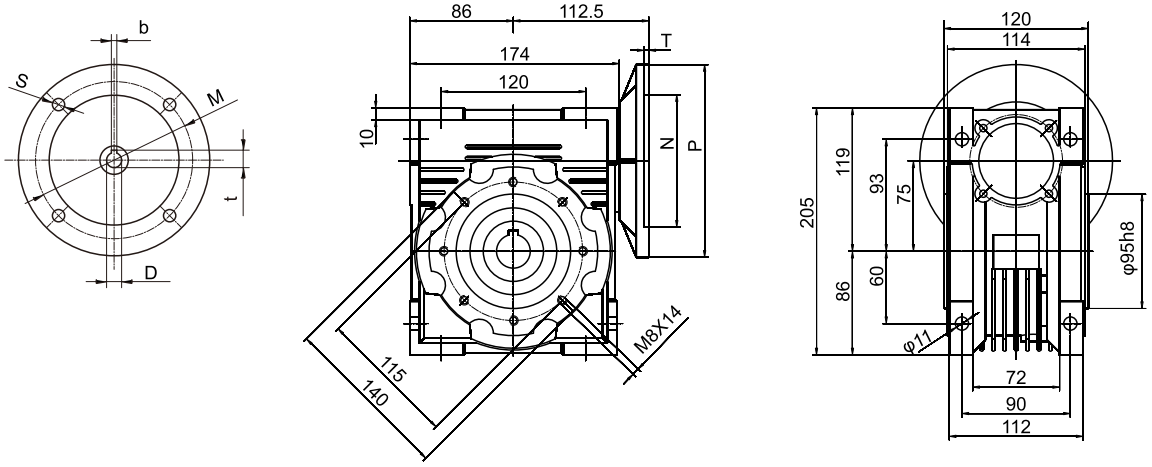

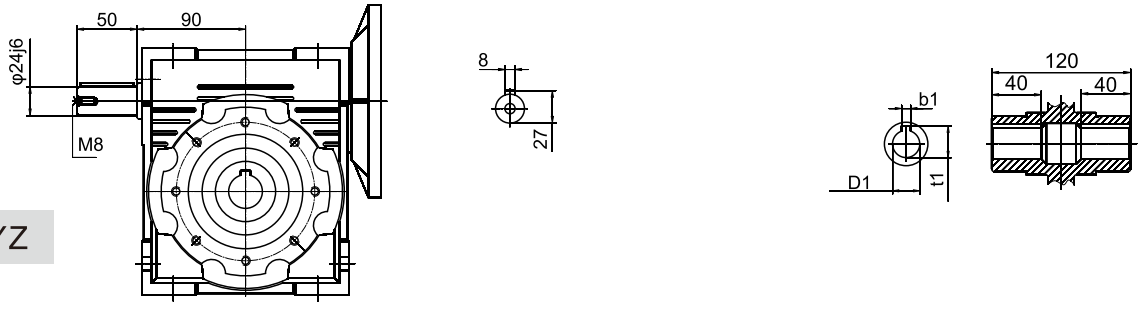

YZ

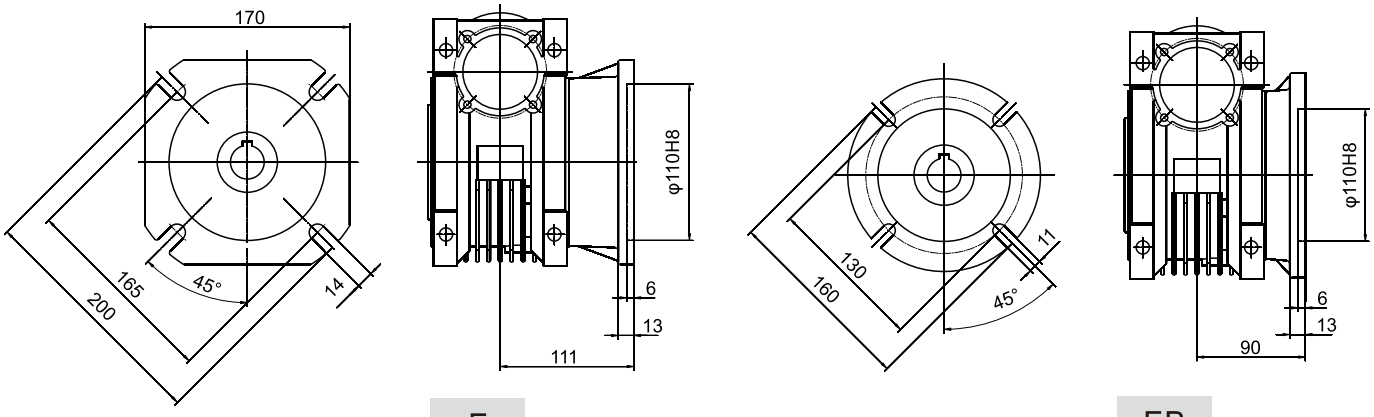

F FB

IEC	D_{E8}	b	t	P	M	N	S	T
80B5	19	6	21.8	200	165	130	11	4
80B14	19	6	21.8	120	100	80	6.5	3.5
90B5	24	8	27.3	200	165	130	11	4
90B14	24	8	27.3	140	115	95	9	3.5
100/112B5	28	8	31.3	250	215	180	13.5	4
100/112B14	28	8	31.3	160	130	110	9	4.5

$D_{1\,H8}$	b_1	t_1
28	8	31.3
30*	8	33.3
32*	10	35.3
35*	10	38.3

* 非标产品，订单时请说明
* Only on request

重量（不包含马达）≈9kg
Weight without motor ≈9kg

WMRV90

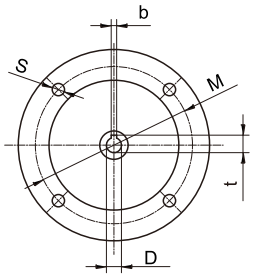

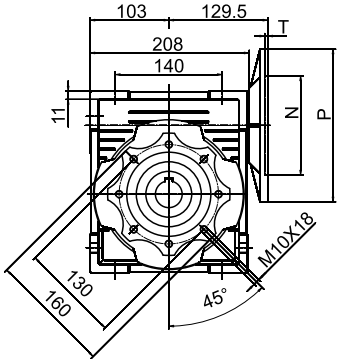

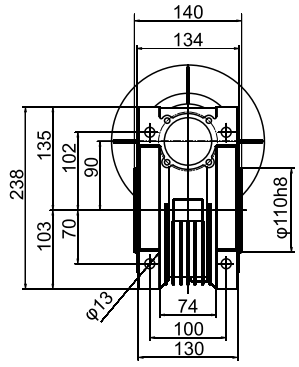

YZ

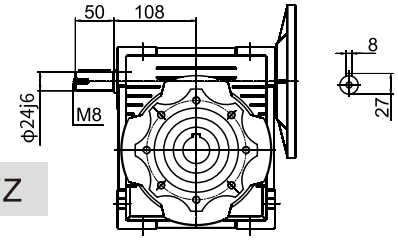

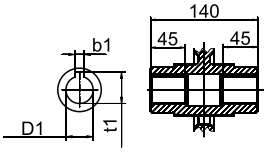

F

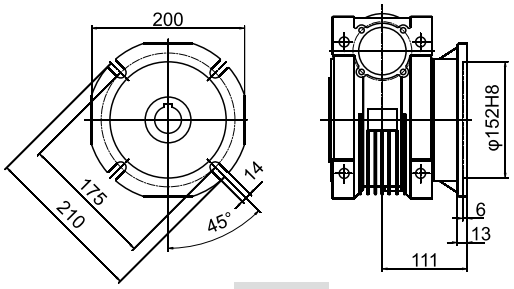

FB

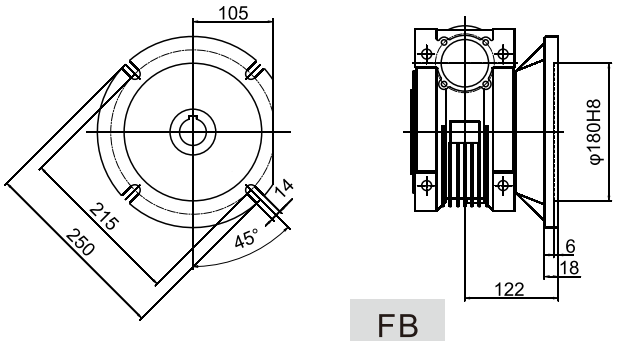

FC

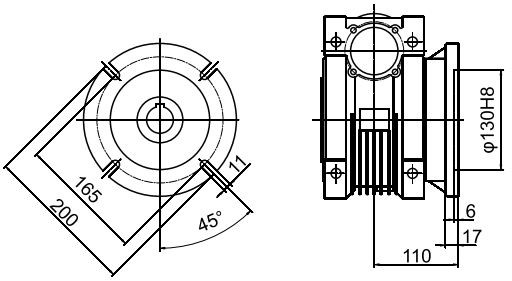

FD

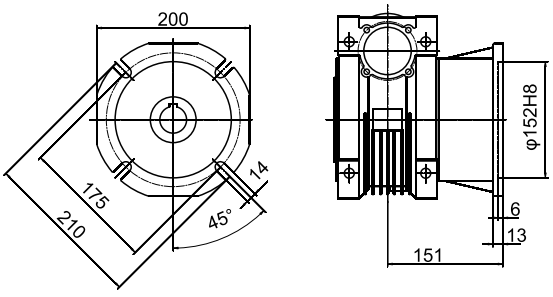

IEC	D_{E8}	b	t	P	M	N	S	T
80B5	19	6	21.8	200	165	130	11	4
80B14	19	6	21.8	120	100	80	6.5	3.5
90B5	24	8	27.3	200	165	130	11	4
90B14	24	8	27.3	140	115	95	9	3.5
100/112B5	28	8	31.3	250	215	180	13.5	4
100/112B14	28	8	31.3	160	130	110	9	4.5

$D_{1\,H8}$	b_1	t_1
35	10	38.3
38*	10	41.3
40*	12	43.3

* 非标产品，订单时请说明
* Only on request

重量（不包含马达）≈12kg
Weight without motor ≈12kg

WMRV110

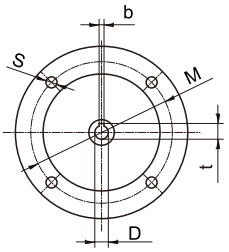

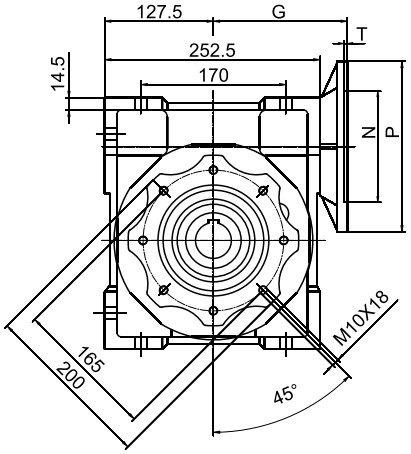

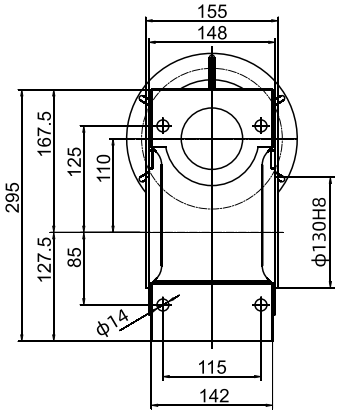

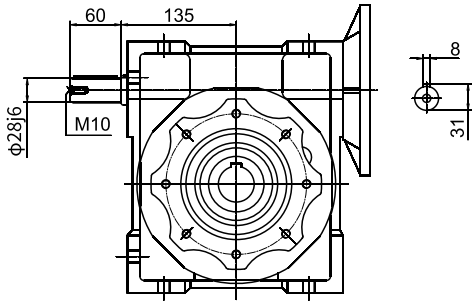

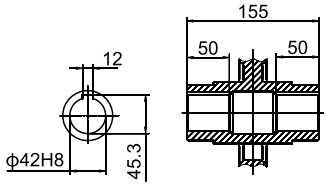

YZ

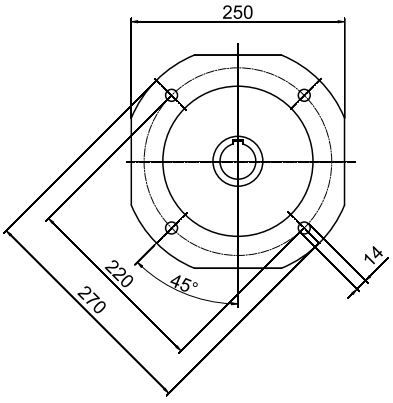

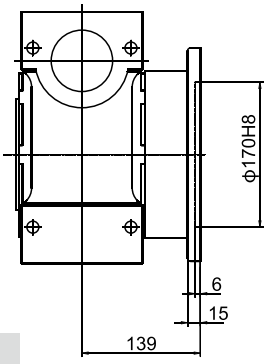

F

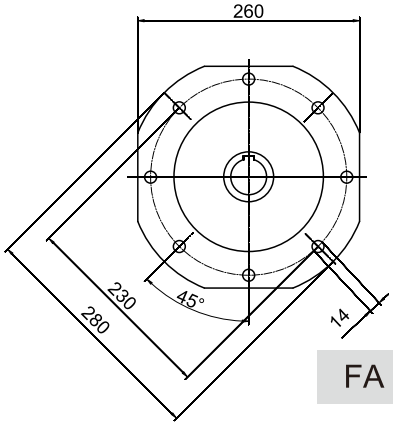

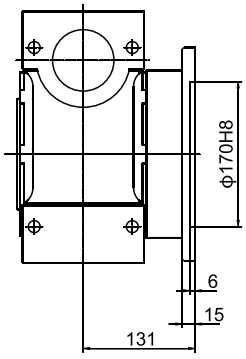

FA

重量(不包含马达)≈38kg
Weight without motor ≈38kg

IEC	De8	b	t	P	M	N	S	T	G
90B5	24	8	27.3	200	165	130	11	4	157
90B14	24	8	27.3	140	115	95	9	3.5	157
100/112B5	28	8	31.3	250	215	180	13.5	4	155
100/112B14	28	8	31.3	160	130	110	9	4.5	155
132B5	38	10	41.3	300	265	230	13.5	4.5	159

WMRV130

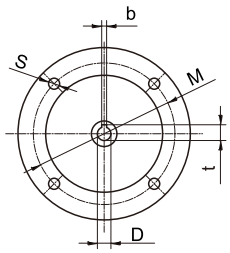

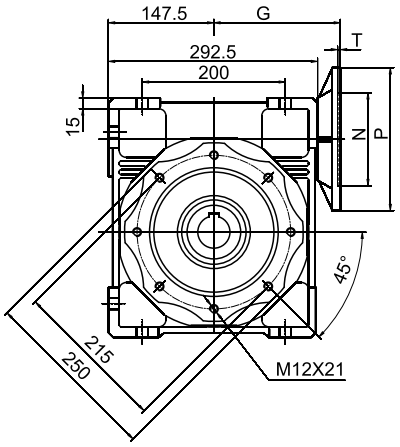

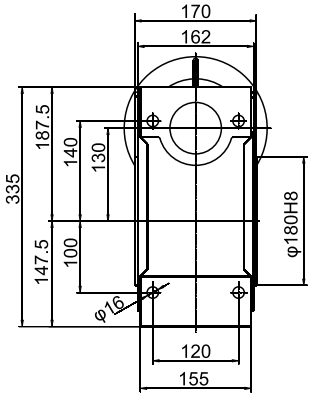

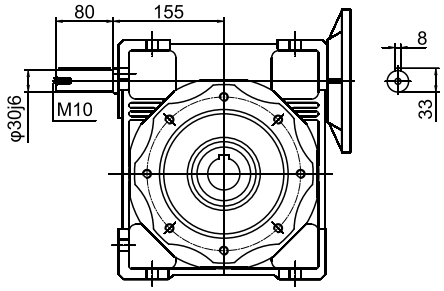

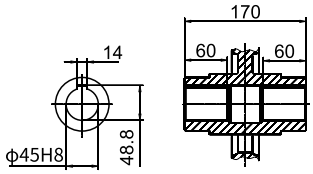

YZ

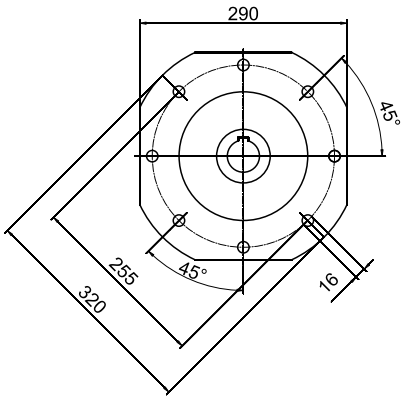

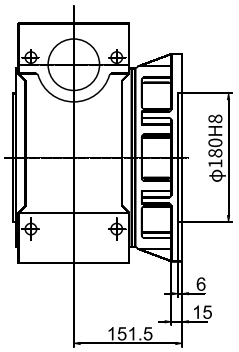

F

重量(不包含马达) ≈55kg
Weight without motor ≈55kg

IEC	DE8	b	t	P	M	N	S	T	G
90B5	24	8	27.3	200	165	130	11	4	177
90B14	24	8	27.3	140	115	95	9	3.5	177
100/112B5	28	8	31.3	250	215	180	13.5	4	175
100/112B14	28	8	31.3	160	130	110	9	4.5	175
132B5	38	10	41.3	300	265	230	13.5	4.5	179

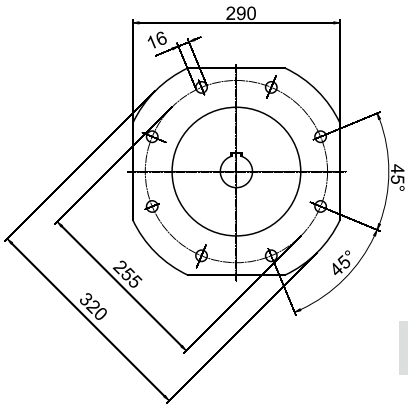

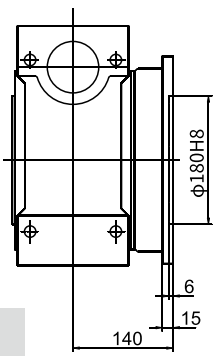

FA

WMRV150

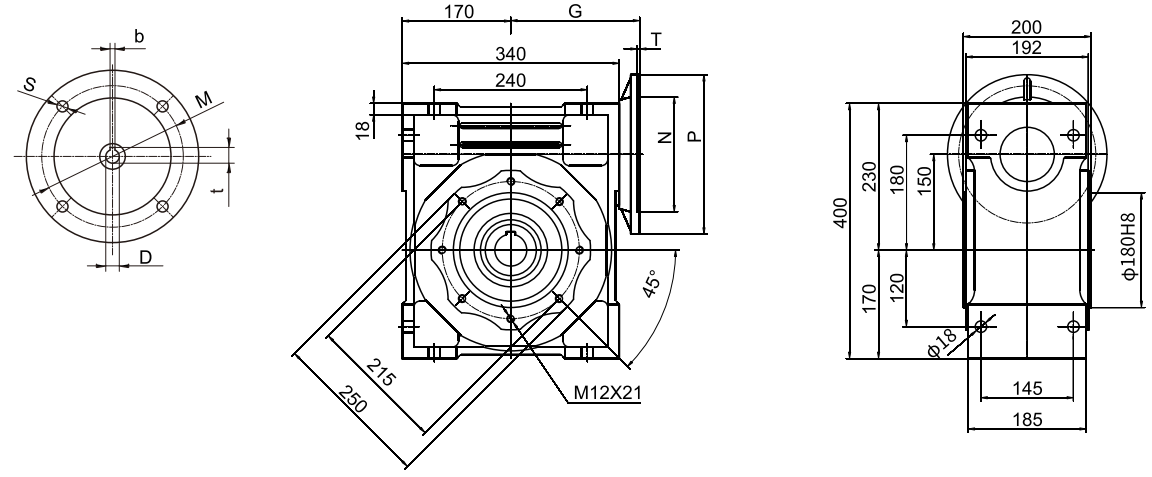

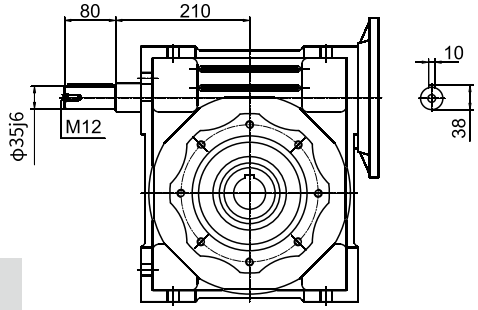

YZ

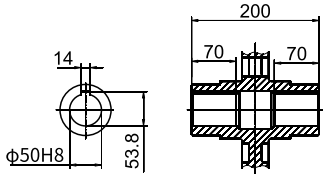

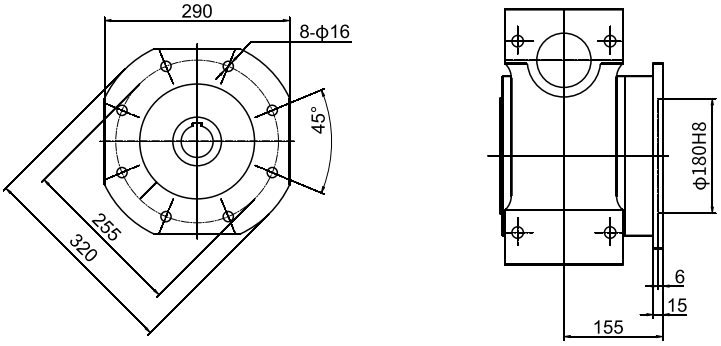

F

重量(不包含马达)≈105kg
Weight without motor ≈105kg

IEC	D E8	b	t	P	M	N	S	T	G
100/112B5	28	8	31.3	250	215	180	13.5	4	202
132B5	38	10	41.3	300	265	230	13.5	4.5	202
160B5	42	12	45.3	350	300	250	18	6	212

WMRV185

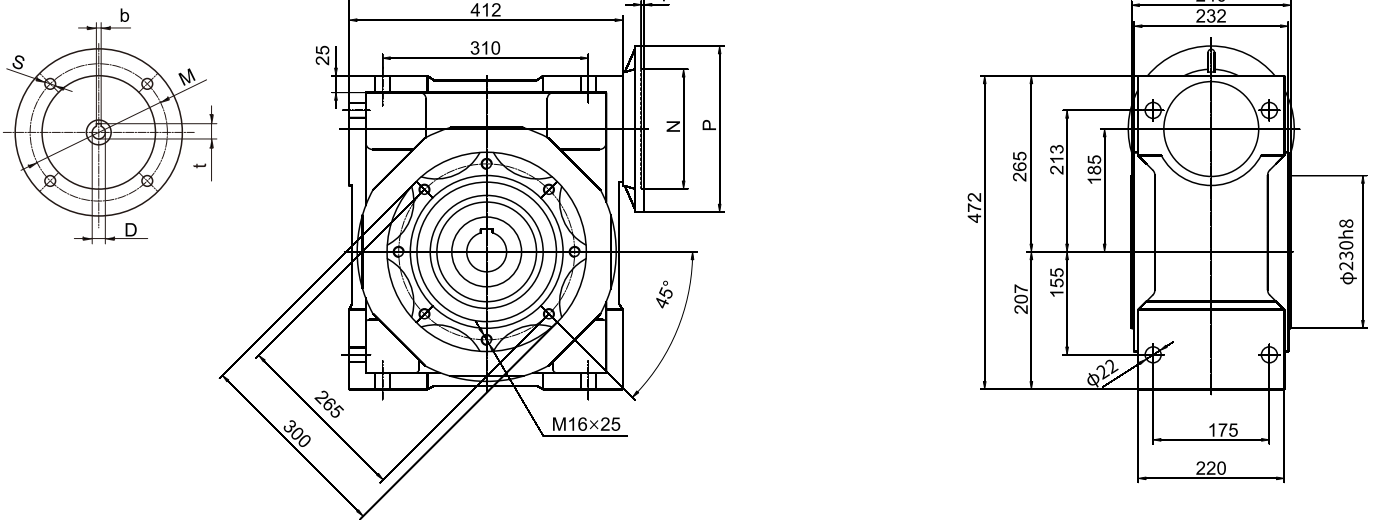

YZ

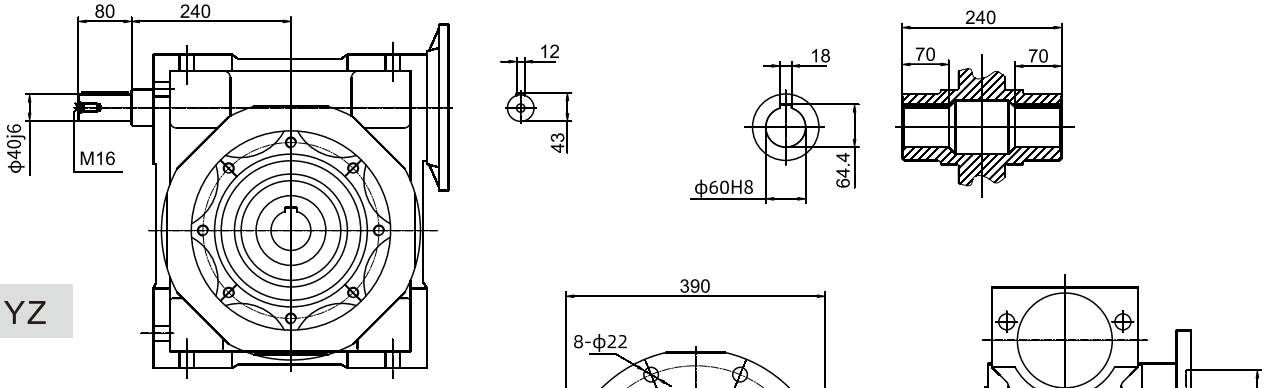

F

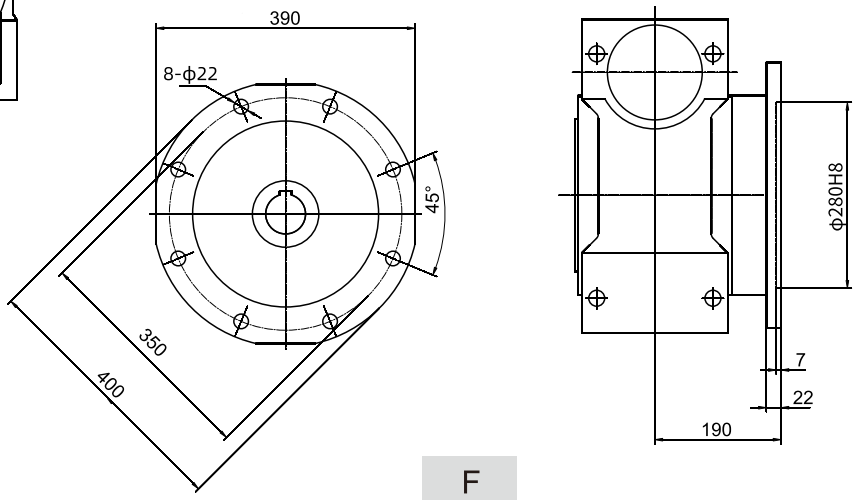

重量(不包含马达) ≈200kg
Weight without motor ≈200kg

IEC	D_{E8}	b	t	P	M	N	S	T	G
100/112B5	28	8	31.3	250	215	180	13.5	4	237
132B5	38	10	41.3	300	265	230	13.5	4.5	237
160B5	42	12	45.3	350	300	250	18	6	247
180B5	48	14	51.8	350	300	250	18	6	247

WMRV25/30

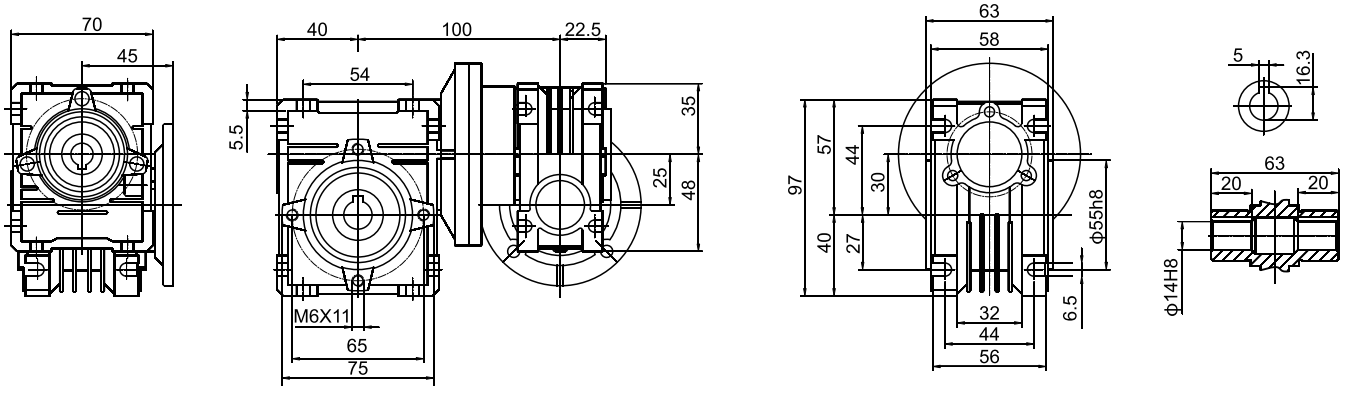

WMRV30/40

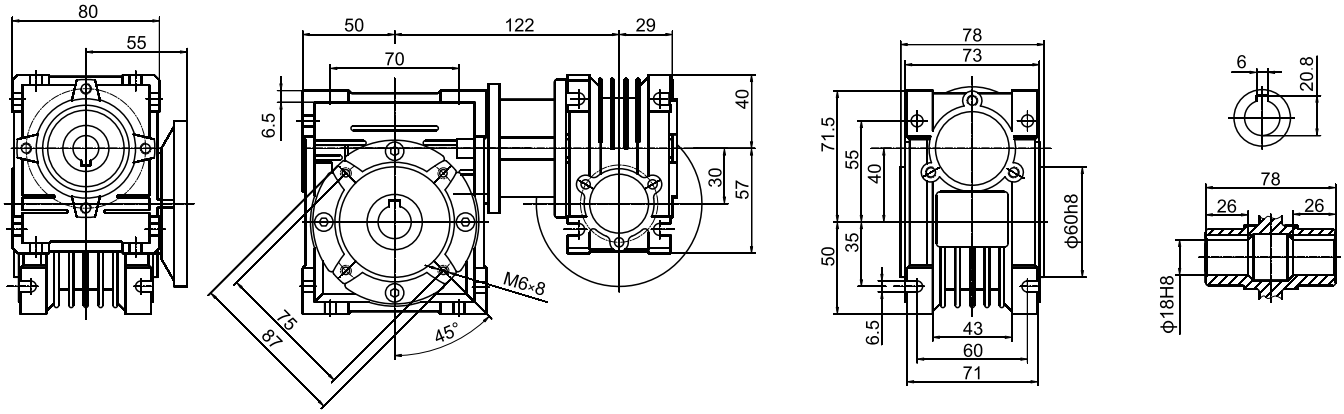

WMRV30/50

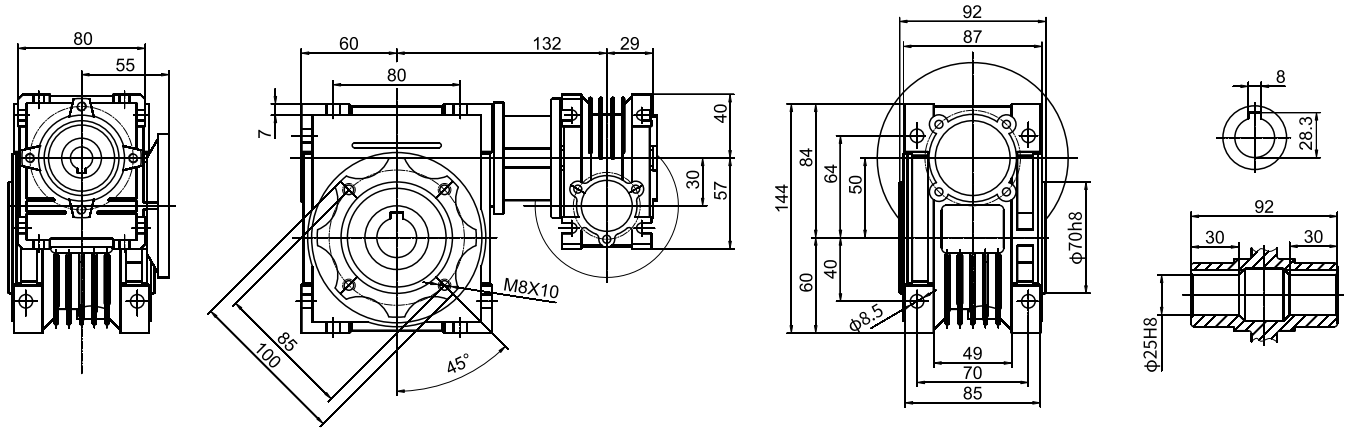

WMRV30/63

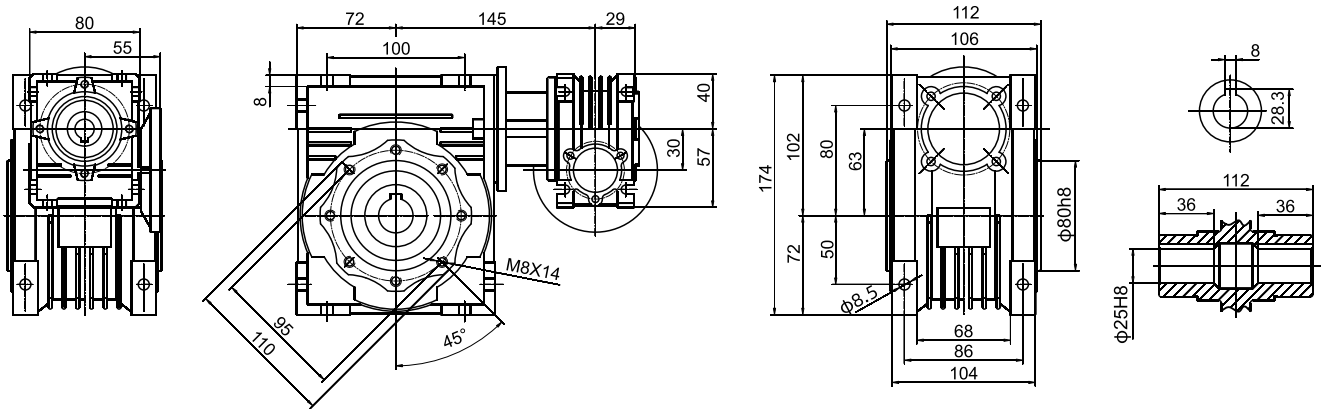

WMRV40/75

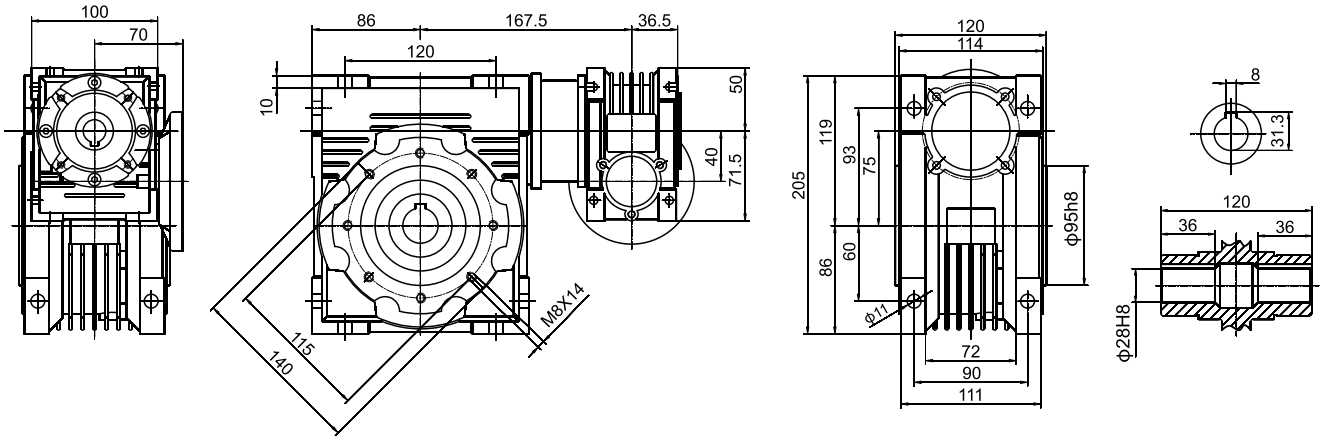

WMRV40/90

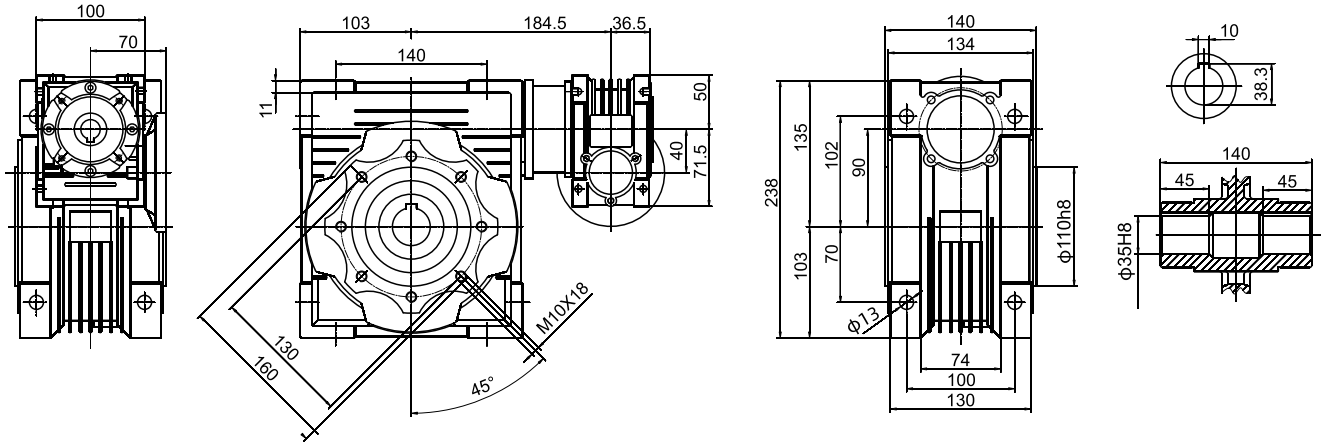

WMRV50/110

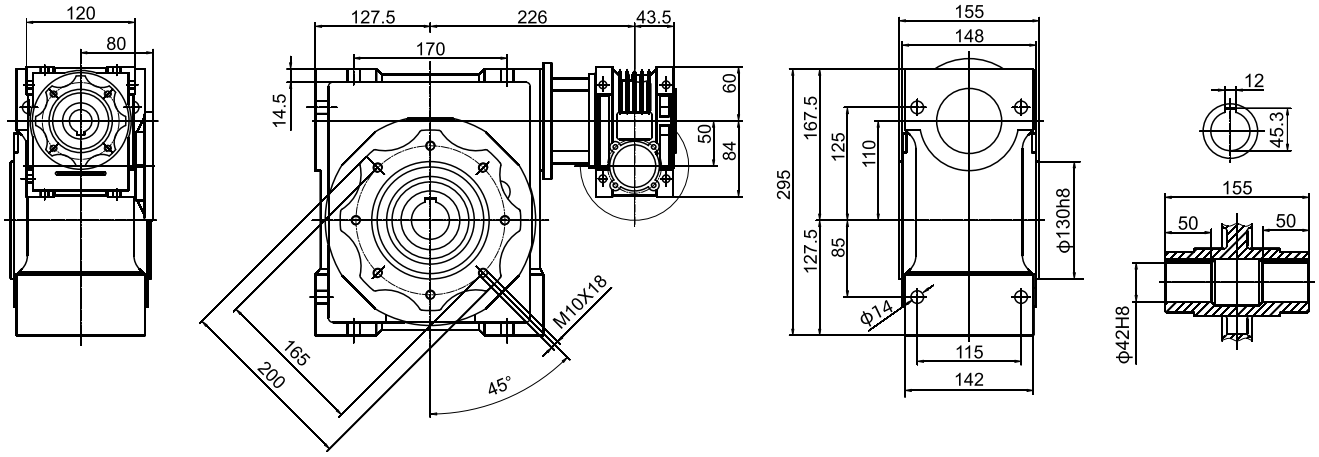

WMRV63/130

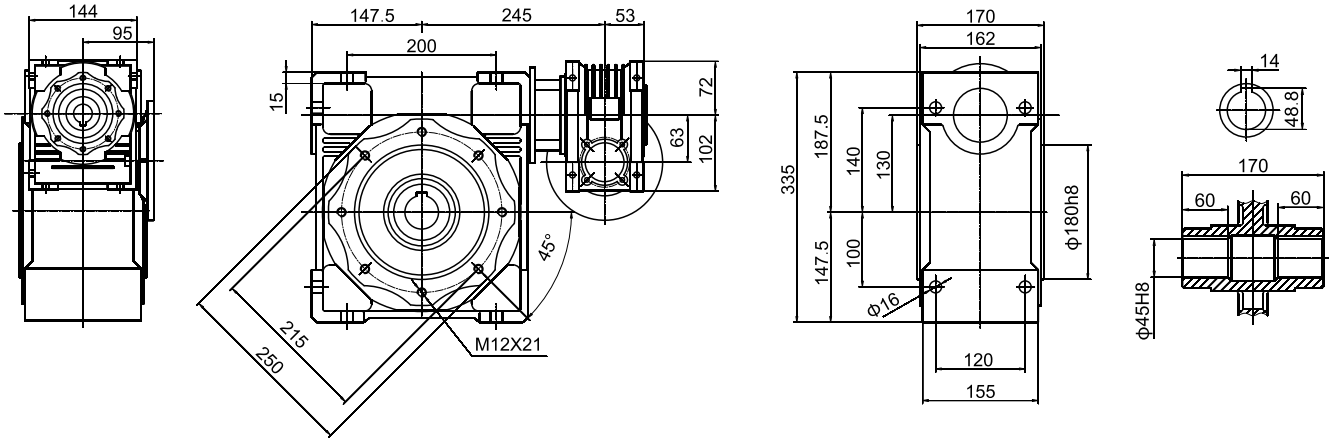

WMRV63/150

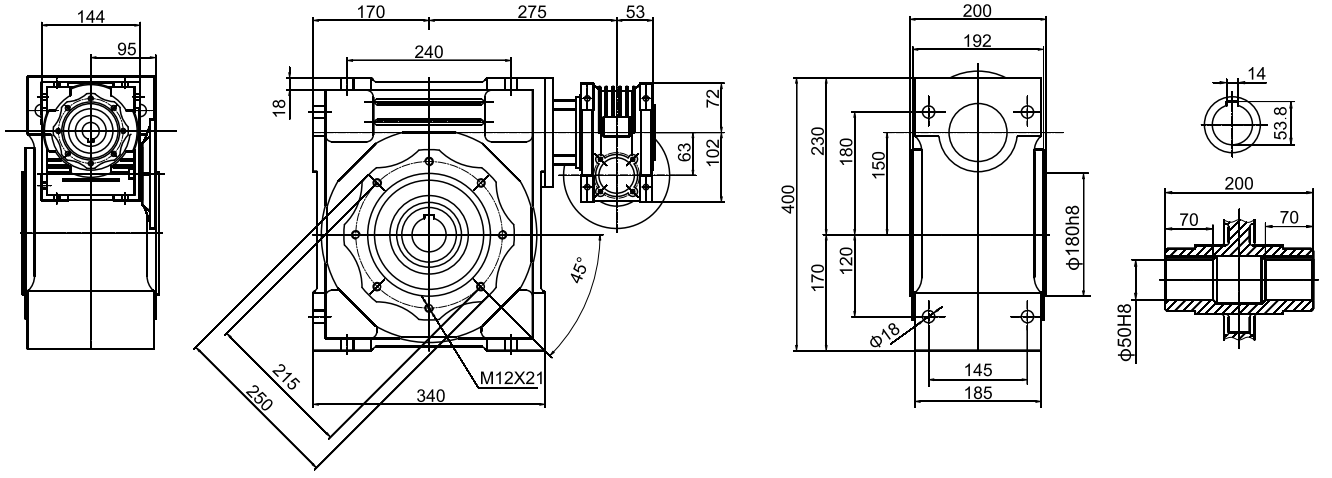

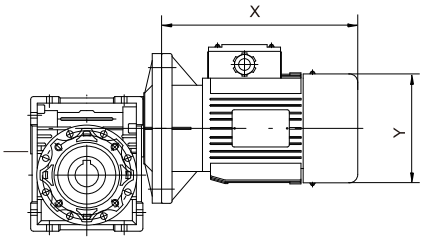

电动机外形尺寸一览表
Overall dimensions for electric motor

机座号	56		63		71		80		90		100		112	132		160		180	
功率(kw)	0.06	0.09	0.12	0.18	0.25	0.37	0.55	0.75	1.1	1.5	2.2	3	4	5.5	7.5	11	15	18.5	22
X	175		200		240		245		270	295	315		340	390	430	520	565	580	615
Y	120		130		140		160		175		195		225	275		320		360	

单向/双向输出轴尺寸
Dimensions of single/double output shaft

型号 Type	D(h6)	B	B1	L	L1	f	b	t
25	11	23	25.5	81	101	-	4	12.5
30	14	30	32.5	102	128	M6	5	16
40	18	40	43	128	164	M6	6	20.5
50	25	50	53.5	152	199	M10	8	28
63	25	50	53.5	173	219	M10	8	28
75	28	60	63.5	192	247	M10	8	31
90	35	80	84	234	308	M12	10	38
110	42	80	84.5	249	324	M16	12	45
130	45	80	85	265	340	M16	14	48.5
150	50	102	110	324	420	M20	14	53.5
185	60	112	120	374	480	M20	18	64

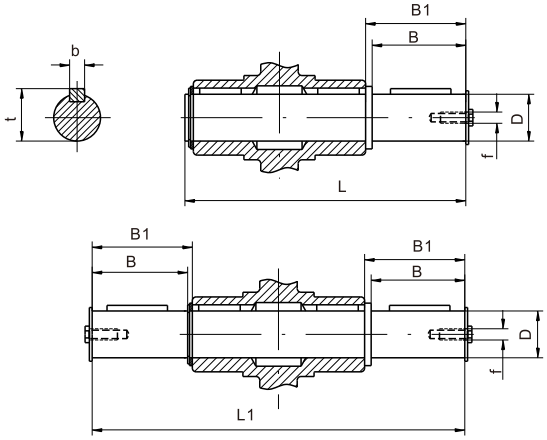

延伸蜗杆尺寸
Dimensions of extension worm shafts

型号 Type	G3	G2	T	d(j6)	b	t	f1
25	38	42	18	9	3	10.2	-
30	45	51	20	9	3	10.2	-
40	53	60	23	11	4	12.5	M5
50	64	74	30	14	5	16	M6
63	76.5	88.5	40	19	6	21.5	M6
75	90	105	50	24	8	27	M8
90	108	125	50	24	8	27	M8
110	135	142	60	28	8	31	M10
130	155	162	80	30	8	33	M10
150	175	195	80	35	10	38	M12
185	240	240	80	40	12	43	M16

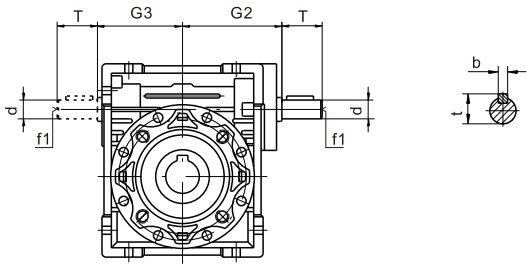

转矩臂尺寸
Dimensions of torque arms

型号 Type	K1	R	KH	G	KG
25	70	15	8	14	17.5
30	85	15	8	14	24
40	100	18	10	14	31.5
50	100	18	10	14	38.5
63	150	18	10	14	49
75	200	30	20	25	47.5
90	200	30	20	25	57.5
110	250	35	25	30	62
130	250	35	25	30	69
150	250	35	25	30	84

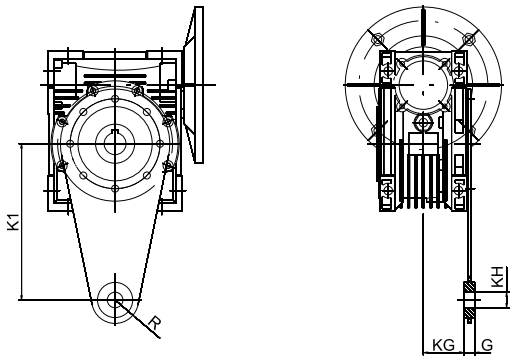

型号表示示例

WMRV40减速机，30速比，伺服电机法兰60×60，止口直径50，轴径11核对减速机接口与电机尺寸适配性后，选型如下：WMRV40-30-S60N50D11

选型注意事项

1.减速机蜗杆孔深LR应＞电机轴深LR；
2.减速机法兰止口深度LE应≥电机LE；
3.少数品牌电机轴台阶突出，应校核LK尺寸，即减速机LK应＞电机LE+LM；
4.少数品牌电机平键规格非标，应校核W尺寸（典型为轴径φ19以及φ22的伺服电机）；
5.若表格中未查到对应型号可发电机外形图至午马技术部进行评估。

For Example

WMRV40, ratio 30, servo motor flange 60×60mm, stop diameter 50mm, shaft diameter 11mm.
After checking the compatibility of the reducer input size and the motor size,
the selection is as follows: WMRV40-30-S60N50D11

Selection Precautions

1. Reducer worm hole depth LR should be deeper than motor shaft depth LR;
2. Reducer flange stop depth LE should be ≥ motor LE;
3. A few brands of motor shafts have protruding stop, need to check the LK size,
   the reducer LK should be bigger than the motor LE+LM;
4. A few brands of motor key specifications are non-standard, need to check W size
   (typically for servo motors with shaft diameters of φ19 and φ22);
5. If the corresponding model is not found in the table,
   please send the motor drawing to WUMA Technical Department for evaluation.

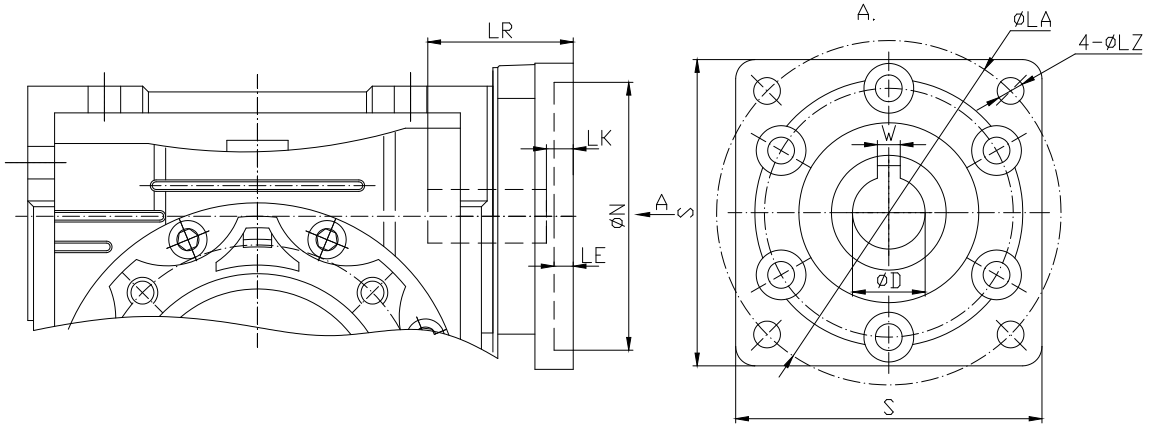

伺服电机法兰尺寸表
Dimensions of servo motor flange

表11
Table11

机型号 Type	接口代号 Model number	S	N	D	W	LR	LE	LK	LA	LZ
WMRV30	S85N70D11	85	70	11	4	37	5	12	90-100	7
	S85N73D11	85	73	11	4	37	5	12	90-100	7
	S90N83D11	90	83	11	4	40	5	13	99-105	7
	S104N94D11	104	94	11	5	42	6	15	115-121	9
	S104N95D11	104	95	11	5	42	6	15	115-121	9
	S104N98D11	104	98	11	5	42	6	15	115-121	9
WMRV40	S60N50D11	60	50	11	4	34	4	7	70	7
	S60N50D14	60	50	14	5	34	4	7	70	7
	S85N70D11	85	70	11	4	41	6	7	90-100	7
	S85N70D14	85	70	14	5	41	6	7	90-100	7
	S85N73D11	85	73	11	4	41	6	7	90-100	7
	S85N73D14	85	73	14	5	41	6	7	90-100	7
	S90N83D11	90	83	11	4	39	5	8	99-105	7
	S90N83D14	90	83	14	5	39	5	8	99-105	7
	S104N94D11	104	94	11	4	41	6	10	115-121	9
	S104N94D14	104	94	14	5	41	6	10	115-121	9
WMRV50	S80N70D14	80	70	14	5	38	5	7	90-94	7
	S80N70D19	80	70	19	6	44	5	10	90-94	7
	S80N73D14	80	73	14	5	38	5	7	90-94	7
	S80N73D19	80	73	19	6	44	5	10	90-94	7
	S85N70D14	85	70	14	5	38	5	7	90-94	7
	S85N70D19	85	70	19	6	44	5	10	90-94	7
	S85N73D14	85	73	14	5	38	5	7	90-94	7
	S85N73D19	85	73	19	6	44	5	10	90-94	7
	S90N80D14	90	80	14	5	40	5	9	99-105	7
	S90N80D19	90	80	19	6	57	5	9	99-105	7
	S90N83D11	90	83	11	4	45	5	9	99-105	7
	S110N85D14	110	85	14	5	42	6	6	126-131	9
	S110N85D19	110	85	19	6	42	6	6	126-131	9
WMRV63	S80N70D19	80	70	19	6	44	4	7	90	M5-M6
	S85N73D19	85	73	19	6	44	4	7	90	7
	S110N95D14	110	95	14	5	60	6	23.5	115-130	9
	S110N95D19	110	95	19	6	60	6	23.5	115-130	9
	S110N95D22W8	110	95	22	8	60	6	23.5	115-130	9
	S110N95D24	110	95	24	8	60	6	23.5	115-130	9
	S130N110D19	130	110	22	6	63	6.5	17	129-156	9
	S130N110D22W6	130	110	22	6	63	6.5	17	129-156	9
	S130N110D22W8	130	110	22	8	63	6.5	17	129-156	9
	S130N110D24	130	110	24	8	63	6.5	17	129-156	9
	S130N110D24L	130	110	24	8	66	6.5	20	129-156	9
WMRV75	S110N95D19	110	95	19	6	67	6	23.5	115-121	9
	S130N110D19	130	110	19	6	59	6.5	11.5	129-156	9
	S130N110D22W6	130	110	22	6	59	6.5	11.5	129-156	9
	S130N110D22W8	130	110	22	8	59	6.5	11.5	129-156	9
	S130N110D24	130	110	24	8	67	6.5	11.5	129-156	9
	S130N110D28	130	110	28	8	67	6.5	11.5	129-156	9
WMRV90	S110N95D19	110	95	19	6	67	6	23.5	115-121	9
	S130N110D22W6	130	110	22	6	59	6.5	11	129-156	9
	S130N110D22W8	130	110	22	8	59	6.5	11	129-156	9
	S130N110D24	130	110	24	8	59	6.5	11	129-156	9
	S130N110D24L	130	110	24	8	71	6.5	23	129-156	9
	S130N110D28	130	110	28	8	69	6.5	11	129-156	9
WMRV110	S130N110D22W6	130	110	22	6	56	7	16.5	145	9
	S130N110D22W8	130	110	22	8	56	7	16.5	145	9
	S130N110D24	130	110	24	8	56	7	16.5	145	9
	S130N110D28	130	110	28	8	56	7	16.5	145	9
	S180N114.3D35	180	114.3	35	10	89.5	5	9.5	200	13.5
WMRV130	S130N110D22W6	130	110	22	6	56	7	16.5	145	9
	S130N110D22W8	130	110	22	8	56	7	16.5	145	9
	S130N110D24W8	130	110	24	8	56	7	16.5	145	9
	S180N114.3D35	180	114.3	35	10	88	5	9.5	200	13.5
WMRV150	S180N114.3D35	180	114.3	35	10	98	5	18	200	13
	S180N114.3D38	180	114.3	38	10	98	5	18	200	13
	S180N114.3D42	180	114.3	42	12	123	5	14	200	13
	S200D42	200	180	42	12	88	6	16	215	M12
	S220D35	220	200	35	10	117	5	22.8	235	13.5
	S220D42	220	200	42	12	117	5	22.8	235	13.5

微型蜗杆减速机与无级变速机(基本型)组合型技术参数
The technical data of the unit which consisted of Worm micreducer and Variator (basic type)

微型蜗杆减速机与无级变速机(基本型)组合技术参数见表11
By table 11 can find the technical data of the unit which consists of Worm microreducer and Variator (basic type)

组合型外形及安装尺寸
The overall and mounting dimensions table of the unit

组合型外形及安装尺寸见图11、表12
By chart 11and table 12, can find the overall and mounting dimensions of the unit
单向/双向输出轴尺寸见图5、表8
By shart 5 and table 8, can find the dimensions of single/double output shaft
延伸蜗杆轴尺寸见图6、表9
By chart 6 and table 9, can find the dimensions of extension shaft
转矩臂尺寸见图7、表10
By chart 7 and table 10,can find dimensions of torque arms

组合型结构形式代号
Structure mounting position code of unit

组合型结构形式见图13
By chart13,can find overall structure mounting position

标记方式 Model designation

□ □ — □ — □ — □ □ — □ — □ — □ — □

MBN型
Model MBN
Mb型
Model MB
机座规格02-40
Type 02-40
电机类型及功率(四级)Y(KW)
Electric motor type and power Y (KW)
不配电机省略
Omitting without electric motor
安装形式
Mounting without electric motor
WMRV型
Model WMRV
机座规格25-130
Type 25-130
公称传动比7.5-100
Nominal ratio 7.5-100
不配省略
Omiting without it
TA
TA
F2/FL2
F2/FL2
安装用附件要求:F1/FL1
Accessory for mounting:F1/FL1
不配省略
Omitting without it
SZ
SZ
DZ1/DZ2
DZ1/DZ2
输入、输出轴要求:YZ
Input and output shaft Code:YZ

标记示例 Example of sign

MBN02-Y0.18-S1-WMRV40-7.5-F2-DZ
意为MBN型02号无级变速机配Y系列0.18KW电机与WMRV40,i=7.5,带F2输出法兰,单输出轴的蜗杆减速机的组合机,S1安装形式。

MBN02-Y0.18-S1-WMRV40-7.5-F2-DZ
Means:
MBN 02 Variator equipped with electric motor: 0.18KW in series Y and WMRV40,
Output side: single output shaft: DZ Mounting position: S1

微型蜗杆减速机与无级变速器(基本型)组合技术参数

表11

The technical data of unit which is consisted of Worm microreducer and Variator(basic type)

Table11

MBN、MB			02	04	07		15		22	40	
输入功率(kw)(1400r/min)			0.18	0.37	0.55	0.75	1.1	1.5	2.2	3	4
WMRV	I	n2/min	M2 N.m	M2 N.m	M2 N.m	M2 N.m	M2 N.m	M2 N.m	M2 N.m	M2 N.m	M2 N.m
			sf	sf	sf	sf	sf	sf	sf	sf	sf
40	7.5	128.7~25.7	9~18								
			1.4								
	10	96.5~19.3	12~24								
			1.2								
	15	64.4~13	17~34								
			1.1								
	20	48~9.7	22~43								
			0.9								
	25	38.6~7.7	27~52								
			0.7								
	30	32.2~64	31~60								
			0.7								
	40	24~4.8	38~73								
			0.5								
	50	19.3~3.9	46~88								
			0.4								
50	7.5	128.7~25.7		19~38							
				1.5							
	10	96.5~19.3		26~50							
				1.1							
	15	64.4~13		37~71							
				0.9							
	20	48~9.7		47~91							
				0.8							
	25	38.6~7.7		57~110							
				0.6							
	30	32.2~64		65~125							
				0.7							
	40	24~4.8	38~74	79~153							
			1	0.5							
	50	19.3~3.9	46~88	94~182							
			0.8	0.4							
	60	16~3.2	51~98								
			0.7								
	80	12~2.4	64~124								
			0.5								
	100	9.7~1.9	72~140								
			0.4								
63	7.5	128.7~25.7			29~56	39~77					
					1.8	1.3					
	10	96.5~19.3			38~74	52~102					
					1.4	1					
	15	64.4~13			55~107	75~146					
					1.1	0.8					
	20	48~9.7			72~139	99~190					
					1	0.7					
	25	38.6~7.7			87~167	118~229					
					0.8	0.5					
	30	32.2~64			98~191	134~260					
					0.8	0.6					
	40	24~4.8		84~162	125~241	171~328					
				0.9	0.5	0.4					
	50	19.3~3.9		99~191	147~284	200~387					
				0.7	0.5	0.3					
	60	16~3.2		110~212	164~315						
				0.6	0.4						
	80	12~2.4		142~273							
				0.5							
	100	9.7~1.9		152~295							
				0.4							
75	7.5	128.7~25.7					58~114	80~156			
							1.6	1.1			
	10	96.5~19.3					78~151	107~206			
							1.3	0.9			
	15	64.4~13					113~219	155~299			
							0.9	0.6			
	20	48~9.7					147~282	200~385			
							0.7	0.5			
	25	38.6~7.7					178~344	243~469			
							0.6	0.4			
	30	32.2~64					203~392	277~535			
							0.6	0.4			
	40	24~4.8		*86~166	129~248	176~338	255~496				
				1.3	0.8	0.6	0.4				

注:i系指WMRV的传动比,总传动比(1.45~7.25)×$i_o$sf为n2≤n2max/1.93(即最大输出扭矩)时的工作系数,*为特殊配置。

I means the transmission ratio of model WMRV,total ratio is (1.45~7.25)i,Sf is the service factor when n2 less than or equate n2max/1.93(M2max)

微型蜗杆减速机与无级变速器(基本型)组合技术参数

表11

The technical data of unit which is consisted of Worm microreducer and Variator(basic type)

Table11

MBN,MB			02	04	07		15		22	40	
输入功率(kw)(1400r/min)			0.18	0.37	0.55	0.75	1.1	1.5	2.2	3	4
WMRV	I	n2/min	M2 N.m	M2 N.m	M2 N.m	M2 N.m	M2 N.m	M2 N.m	M2 N.m	M2 N.m	M2 N.m
			sf	sf	sf	sf	sf	sf	sf	sf	sf
75	50	19.3~3.9		*103~199	153~297	209~405					
				1	0.7	0.5					
	60	16~3.2		*115~222	172~330	234~451					
				0.9	0.6	0.4					
	80	12~2.4		*149~287	222~427						
				0.7	0.4						
	100	9.7~1.9		*164~318							
				0.5							
90	7.5	128.7~25.7					60~116	81~158	*119~232		
							2	1.5	1		
	10	96.5~19.3					79~153	108~209	*158~306		
							1.7	1.3	0.9		
	15	64.4~13					115~222	156~303	*230~444		
							1.4	1	0.7		
	20	48~9.7					150~289	205~394	*308~592		
							1.2	0.9	0.6		
	25	38.6~7.7					182~353	243~481	*374~723		
							0.9	0.7	0.5		
	30	32.2~6.4					208~403	284~549			
							1	0.7			
	40	24~4.8			134~258	183~352	269~516	367~704			
					1.4	1	0.7	0.5			
	50	19.3~3.9			160~310	219~422	321~620	438~845			
					1.1	0.8	0.5	0.4			
	60	16~3.2			183~351	249~479					
					0.9	0.6					
	80	12~2.4			233~447	318~610					
					0.6	0.5					
	100	9.7~1.9			261~508	357~692					
					0.5	0.4					
110	7.5	128.7~25.7							119~232	162~317	216~422
									2	1.5	1.1
	10	96.5~19.3							158~306	216~418	288~557
									1.7	1.2	0.9
	15	64.4~13							230~444	313~606	418~808
									1.3	0.9	0.7
	20	48~9.7							308~592	415~798	554~1064
									1	0.7	0.5
	25	38.6~7.7					187~361	249~493	374~723	511~986	681~1315
							1.6	1.2	0.8	0.6	0.4
	30	32.2~6.4					213~413	291~563	427~826	583~1127	
							1.5	1.1	0.8	0.5	
	40	24~4.8					279~537	381~732	559~1074	763~1465	
							1.1	0.8	0.5	0.4	
	50	19.3~3.9					334~645	456~880			
							0.9	0.7			
	60	16~3.2					381~733	521~1000			
							0.7	0.5			
	80	12~2.4					495~950				
							0.5				
	100	9.7~1.9					559~1085				
							0.4				
130	7.5	128.7~25.7									216~422
										164~320	1.5
	10	96.5~19.3								2	288~557
										216~418	1.2
	15	64.4~13								1.6	418~808
										317~627	0.9
	20	48~9.7								1.2	561~1077
										420~808	0.7
	25	38.6~7.7							374~723	0.9	681~1315
									1.2	511~1010	0.6
	30	32.2~6.4							427~826	0.9	778~1503
									1.2	583~1127	0.6
	40	24~4.8					279~537	381~732	559~1074	0.9	1017~1954
							1.9	1.4	1	763~1465	0.5
	50	19.3~3.9					334~645	456~880	669~1291	0.7	
							1.5	1.1	0.7	912~1761	
	60	16~3.2					382~733	521~1000	764~1467	0.5	
							1.2	0.9	0.6		
	80	12~2.4					502~964	685~1315	1004~1929		
							0.9	0.6	0.4		
	100	9.7~1.9					568~1102	774~1503	1136~2204		
							0.6	0.5	0.3		

MBN
MB +WMRV 组合型外形及安装尺寸表

The overall and mounting dimensions table of the unit

□12

Table 12

MBN MB +WMRV	A	C	D(H7)	E	F	G	G1	G2 MB	G2 MBN	H	I	L	M	N(h8)	N1	O	P	Q	R	S	T	V	X
02+40	70	101	18	121.5	43	78	182.5		134	50	40	71	75	60	36.5	7	87	55	71.5	6.5	23	35	227
02+50	80	121.5	25	144	49	92	192.5		144	60	50	85	85	70	43.5	8.5	100	64	84	7	30	40	
04+50							190		154														245
04+63	100	147.5	25	174	67	112	205		169	72	63	103	95	80	53	8.5	110	80	102	8	40	50	
07+63							238		184														250
04+75	120	174	28	205	72	120	*223		187	86	75	113	115	95	57	11	140	93	119	10	50	60	245
07+75							252		207														250
15+75							285	229															285
07+90	140	208	35	238	72	140	269		224	103	90	130	130	110	67	13	160	102	135	11	50	70	250
15+90							302	246															285
22+90							*338	270															320
15+110	170	252.5	42	294		155	333	262		127.5	110	142	165	130	74	14	200	125	167.5	15	60	85	285
22+110							368	291															320
40+110																							340
15+130	200	292.5	45	335	79	170	353	282		147.5	130	155	215	180	81	16	250	140	187.5	15	80	100	285
22+130							388	311															320
40+130																							340

MBN MB +WMRV	K	KA F	KA FL	KB	KC	KE	a	a1	KM	KN (H8)	KO	KP	KQ	b	t	VC	VF MB	VF MBN	VL MB	VL MBN	VR	VS
02+40	60	67	97	7	4	M6×8(n.4)	45°	90°	87	60	9(n.4)	110	95	6	20.8	71		151		117	110	85
02+50	70	90	120	9	5	M8×10(n.4)			90	70	11(n.4)	125	110	8	28.3			161		127		
04+50																		173		139		
04+63	85	82	112	10	6	M8×14(n.8)			150	115	11(n.4)	180	142		28.3			186		152		
07+63																83		203		170	124.5	110
04+75	90	111		13	6				165	130	14(n.4)	200	170		31.3	71		198		164	110	85
07+75																83		215		182	124.5	110
15+75																97.5	238		196		138	
07+90	100	111		13		M10×18(n.8)			175	152		210	200	10	38.3	97.5	83		226		197	124.5	
15+90																	253		211		138	
22+90																	286		241		143	
15+110	116	139		15					220	170	14(n.8)	270	250	12	45.3		273		231		138	
22+110																	306		261		143	
40+110																						
15+130	120	151.5		15		M12×20(n.8)			255	180	16(n.8)	320	290	14	48.8		293		251			
22+130																	336		281			
40+130																						

注:带*者尺寸为特殊配置

The dimensions with * are a special requirement

图11
Chart11

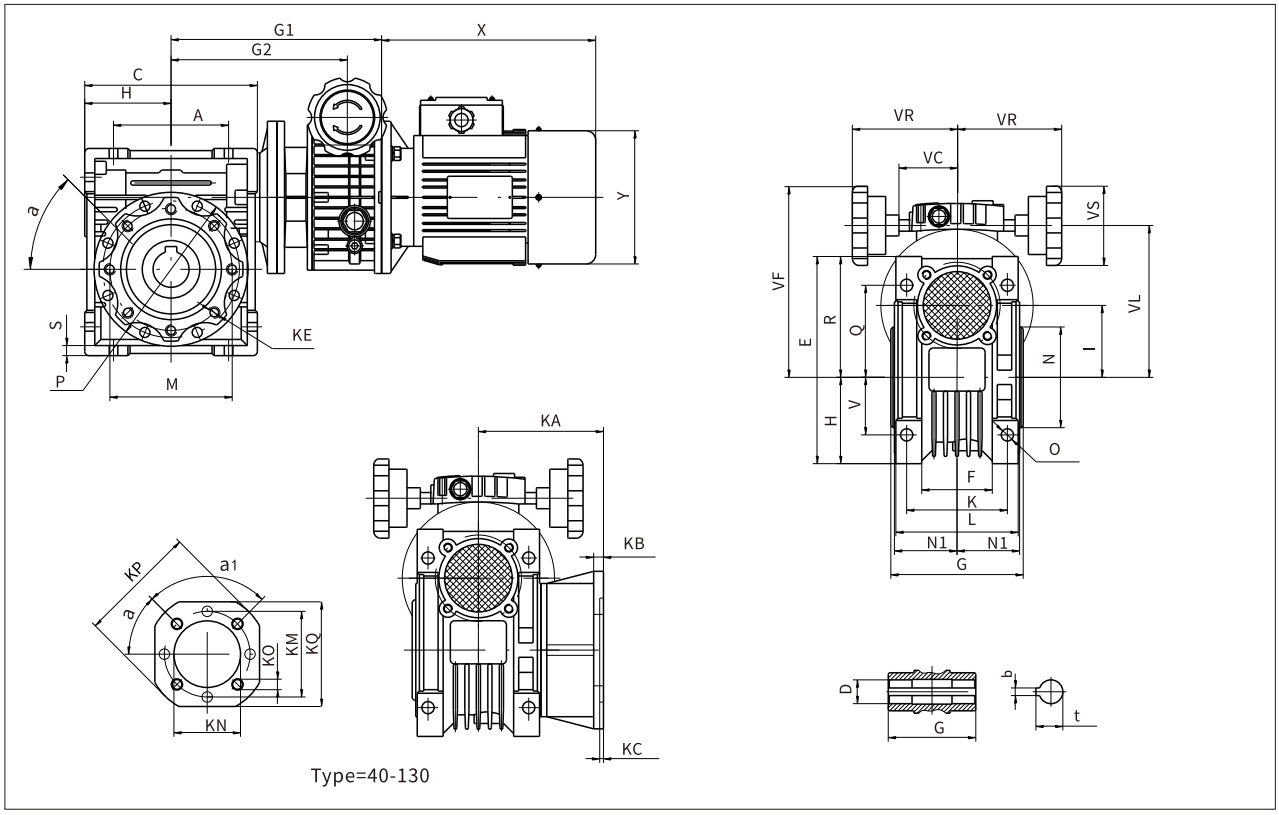

图12
Chart12

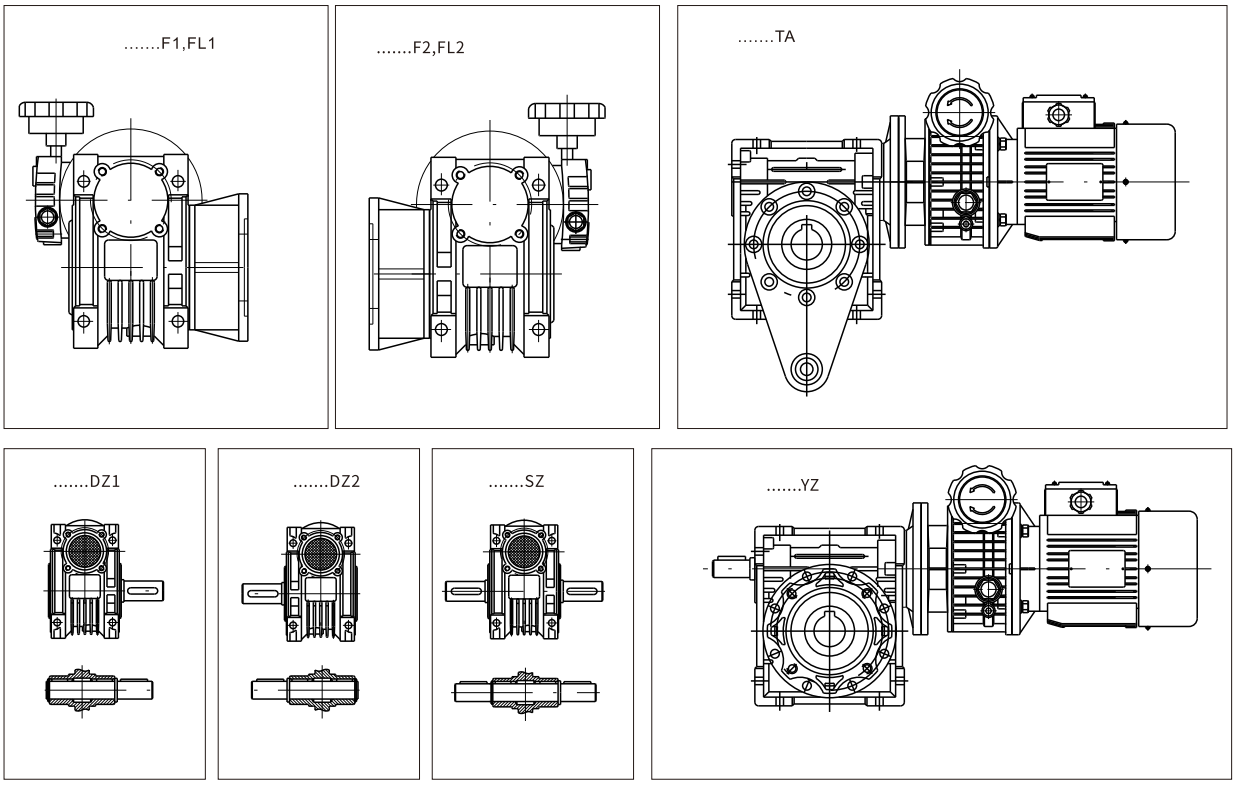

变速机与蜗箱组合型:结构安装形式代号图例
The unit of variator plus worm microreducer structure and mounting position code

图13
Chart 13

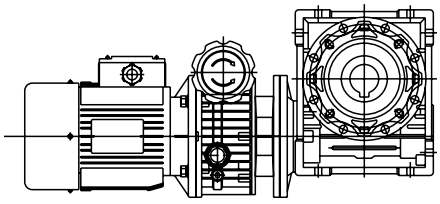

S

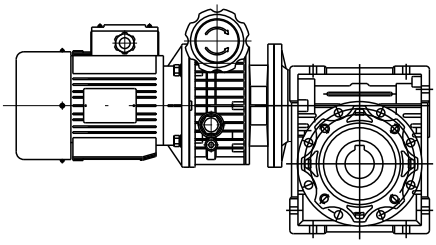

S1

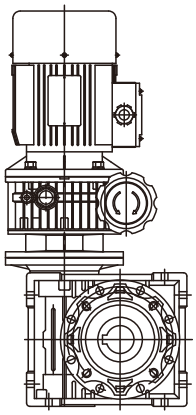

S2

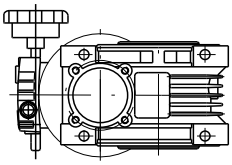

S4

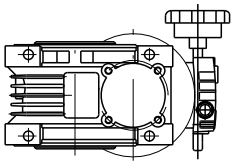

S5

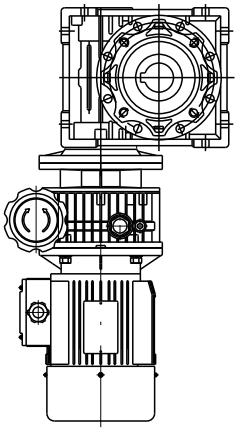

S3

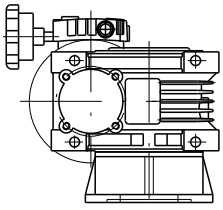

S6

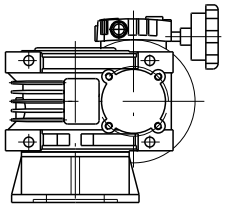

S7

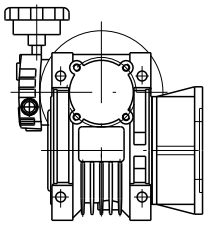

S9

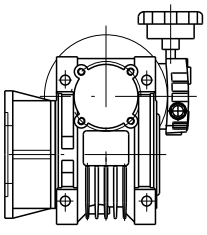

S10

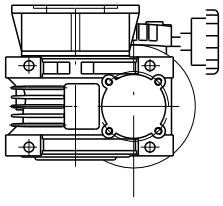

S8

PC系列齿轮减速机的结构性能
Structural Performance of PC Serial Gear Reducer

结构特点
Structural feature

PC系列减速机是采用模块化结构设计的单级齿轮传动减速机，即：
PC063型单级齿轮传动减速机的传动比 i=3.0;
PC071型单级齿轮传动减速机的传动比 i=3.0;
PC080型单级齿轮传动减速机的传动比 i=3.0;
PC090型单级齿轮传动减速机的传动比 i=2.42;
(详细参数见后面“技术参数”表)。

PC系列减速机可以独立供货，也可以直接与WMRV系列蜗杆减速机组合(PC+WMRV组合方式详细参数见“PC+WMRV组合型减速机组合方式”表.)
PC系列前置级减速机与WMRV系列蜗杆减速机连续方法较为简单，类似于B14型的安装方式。

PC Serial Gear Reducer is a single-stage gear driving one adopting modularized structural design .i.e
PC063 single-stage gear driving reducer, its transmission ratio i=3.0;
PC071 single-stage gear driving reducer, its transmission ratio i=3.1;
PC080 single-stage gear driving reducer, its transmission ratio i=3.1;
PC090 single-stage gear driving reducer, its transmission ratio i=2.42;
(The detailed data shown in the following table of technical data)
(For the form of PC+WMRV combination, its detailed data seen in the following table of “The Combination Form of PC+WMRV reducer”).

The connection method for PC series Kit and WMRV Series worm reducer is comparatively simple, similar to the connection form of B14 mount.

减速机主要件的材料
The materials for the main parts of the reducer

1.压铸铝合金(ZL106)箱体。
2.20CrMnMo齿轮合金钢表面处理(渗碳淬火)，渐开线齿形磨削(磨齿)。
3.减速机输出轴采用40Cr中碳钢热处理(调质.表面淬火处理).
1.Die-casting aluminum alloy (ZL106)case
2.20CrMnMo gear alloy steel, surface treatment(cementing&hardening).
involute tooth shape grinding(grinding gear teeth);
3.The output shaft of reducer is made of 40Cr and adopts the heat treatment for medium carbon steel (seasoning and surface hardening treatment).

PC系列齿轮减速机的电机安装
The installation of the motor on PC serial gear speed reducer

为了正确将小齿轮安装在电机轴上，请遵循以下几点要求：
1.全面清洗电机的输出轴
2.取下电机输出轴上的平键
3.加热轴套①至100°C~120°C，按下图示讲轴套①装在电机的输出轴上
4.参考装轴套①的方法装上小齿轮③
5.装上垫圈④，拧紧沉头螺钉⑤(沉头螺钉要涂上螺纹紧固胶防松)
6.因PC减速机已注满润滑油,小心取出图示②处密封端盖(PC减速机出厂时配了电机,无此工序.)
7.装上图示②骨架油封和电机，注意不要损坏骨架油封

注意：PC系列减速机所采用的是高质量的标准电机，可保证电机无振动，低噪音运行

The installation of the motor on PC serial gear reducer:
In order to fix the pinion correctly on motor shaft, please follow the procedures below:
1. Completely clean the output shaft of the motor;
2. Remove the flat key on the output shaft;
3. Heat the sleeve(1) up to 100℃~120℃,and fix the sleeve(1)on the output shaft based on the diagram;
4. Fix the pinion(3)referring to the method of fixing the sleeve(1);
5. Fix the washer(4),and fasten countersunk head screws(5)(countersunk head screws shall be coated with screw fixing glue in order to prevent looseness);
6. Because PC speed reducer has been filled with lubricate ,carefully remove the sealing end cover at(2)in the diagram; (This procedure does not exist because PC speed reducer has been provided with a motor when leaving the factory.)
7. Replace skeleton oil seal and motor at(2)in the diagram, being careful not to damage the skeleton oil seal

Note: PC serial speed reducer adopts a standard motor with high quality,and the motor may run with no vibration and low noise.

PC系列齿轮减速机的电机安装
The installation of the motor on PC serial gear reducer:

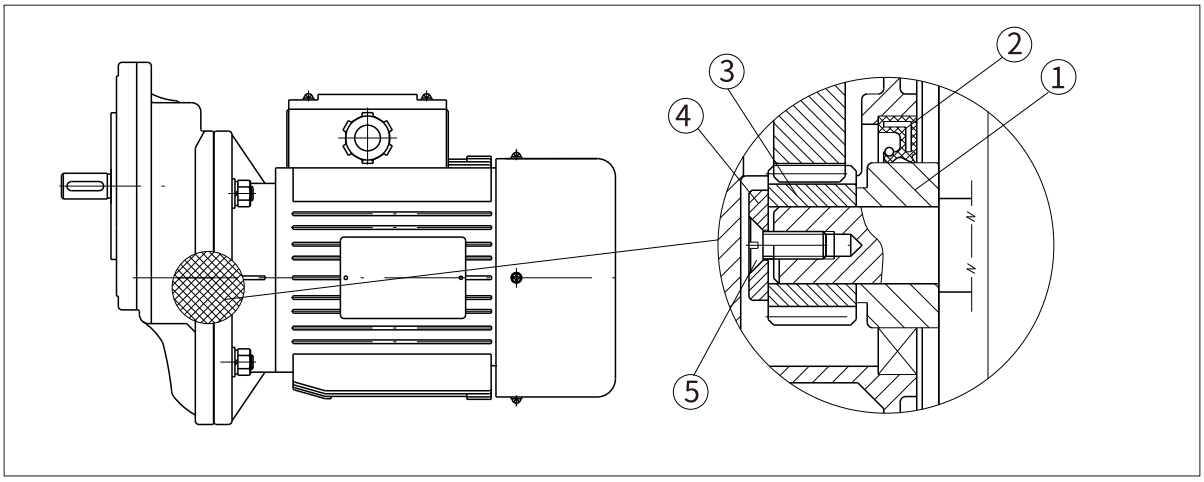

PC系列齿轮减速机的润滑油
Lubricating oil of the motor on PC serial gear reducer:

PC系列减速机采用2#极压锂基钙润滑脂润滑（长期性），可按说明书上规定的位置安装。
PC系列减速机采用2#极压锂基钙润滑脂使用的工作范围-20℃~+50℃
- PC series reducer adopts No.2 extreme pressure lithium lubricating grease(long-term) for lubrication; and the reducer may be fixed according to the position indicated on the specification;
- No.2 extreme pressure lithium lubricating grease adopted on PC serial reducer has the working range from -20℃~+50℃

减速机型号 Type	PC 063	PC 071	PC 080	PC 090
B3、B8 B6、B7 V5、V6	0.05L	0.07L	0.15L	0.15L

注：润滑油的油量单位（升）
Note: The unit of lubricant oil is liter (L).

PC系列齿轮减速机的型号标记：
Signs and marking example of PC series gear reducer

Pc系列减速机的型号由型式代号、机座号、所配电机类型(功率和极数)、公称速比输出轴直径组成，代号标记见下表：
The model includes model code ,motor frame size type equipped (power and pole number).nominal gear ratio and the diameter of output shaft
The code is shown in the following table:

PC	减速机的型式代号 Type
063、071、080、090	减速机的机座号 Motor Frame Size
Y0.09-Y2.20(2P、4P、6P、8P)	配电机功率，极数（4P省略） With motor power, poles(without poles omitted)
3.00、2.42	公称速比(此种减速机为单级齿轮传动可以省略) Nominal gear ratio (This kond of reducer is sing-stage gdar drive, available to omit)
Φ11、Φ14、Φ19、Φ24、Φ28	输出轴直径(标准轴径省略) Output shaft diameter (Standard shaft diameter omitted)
B3、B8、B6、B7、V5、V6	安装方式代号(见PC系列减速机安装方式P40) Code of installation form:B8(Refer Page No. 40)
1、2、3、4	接线盒方向代号(见电机接线盒方向P40) Location of terminal box (Refer Page No. 40)

型号标记示例：
Example of sign

PC063-Y0.18(4P)-3.0-φ11-B8-3等同于PC063-Y0.18-B8-3	
PC	减速机的型号代号：PC Type:PC
063	减速机的机座号：63 Base number:063
Y0.18(4P)	配电机功率;0.18KW,极数=4P(配电机63B5型) With motor power:0.18KW, four poles(with motor 63B5type)
3.00	公称速比：3.00(可以省略) Nominal ratio:3.00(can omitted)
Φ11	输出轴直径：Φ11(标准轴径可以省略) Output shaft diameter:Φ11(Standard shaft diameter omitted)
B8	安装方式代号：B8(见PC系列减速机安装方式P40) Code of installation form:B8(Refer Page No. 40)
3	接线盒方向代号：3(见电机接线盒方向P40) Location of terminal box:3(Refer Page No. 40)

电机接线盒方向
Location of terminal box

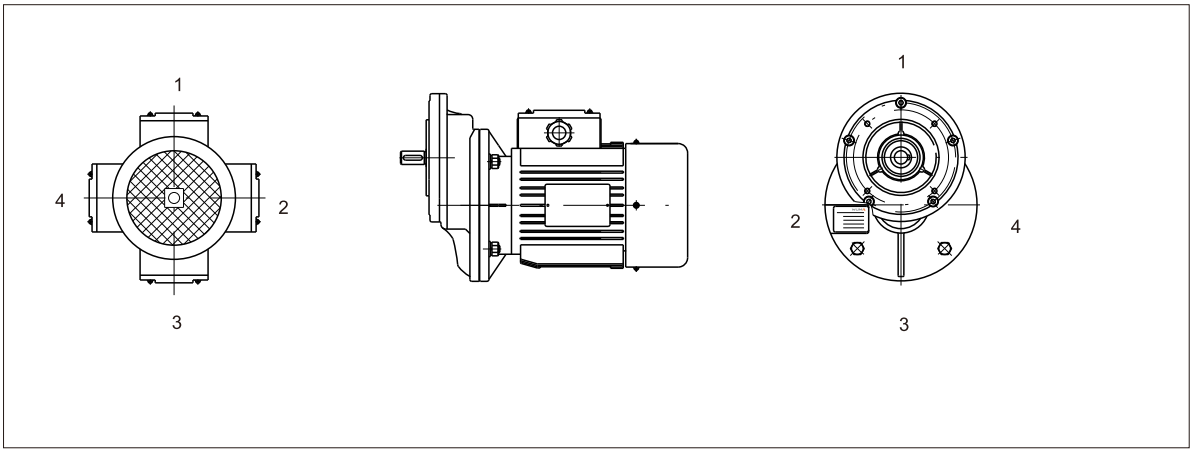

注意:如有特殊要求,订货时按图表标明接线盒位置。
Note: For specific requirements, indicate the position of the terminal box based on the diagram shown.

PC系列减速机安装方式
Mounting Position of PC Series Gear Reducer

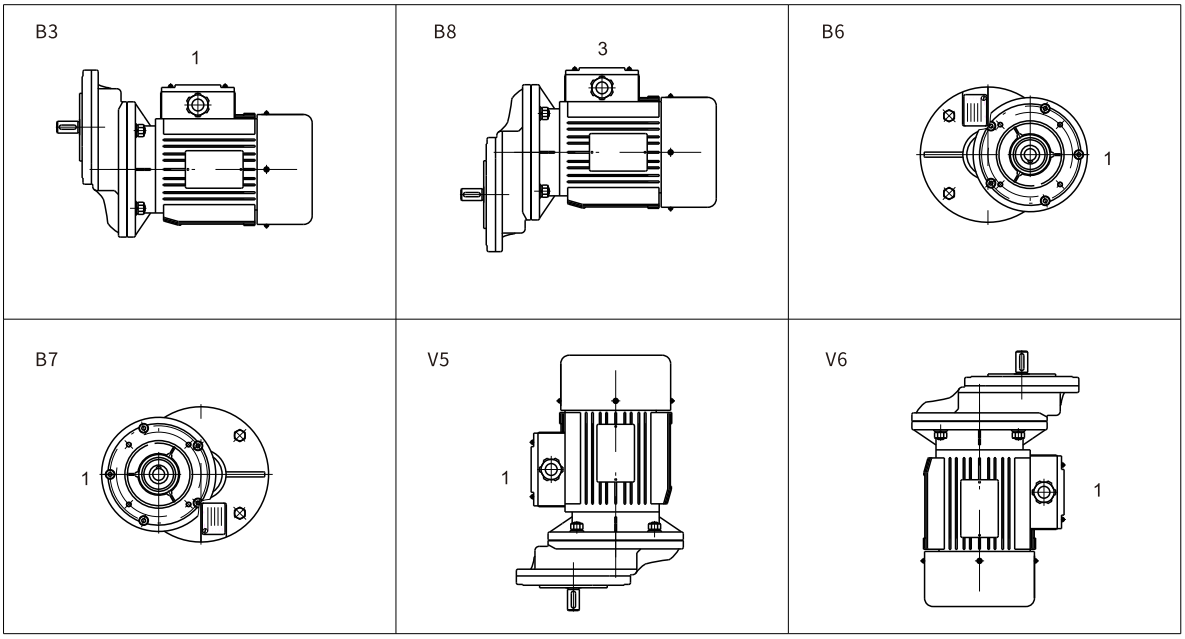

注意:1、如无特殊说明,以B3为标准安装方式
2、无注明安装方式时,请与我公司技术部联系

Note:1 . If there is no specific description,B3 is regarded as the standard mounting position.
2 . If no installation form is described. please contact our technical department.

PC系列减速机外形尺寸图
Dimensions of the PC Series gear reducer

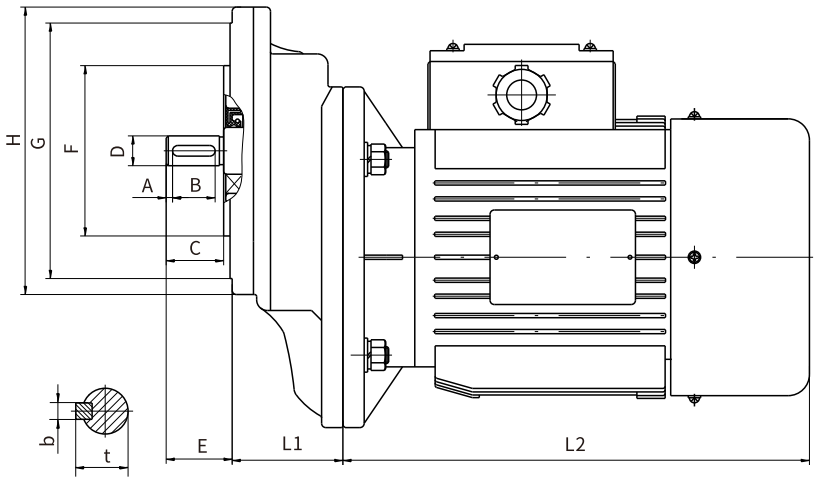

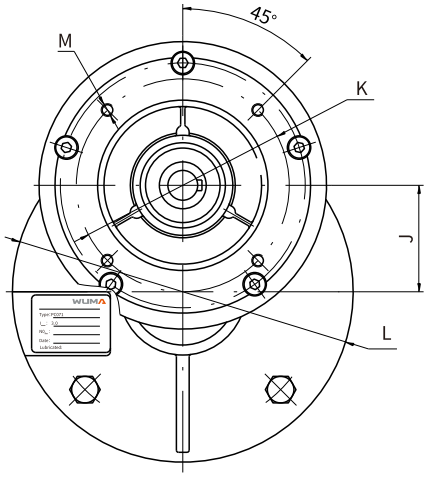

型号 Type	A	B	C	D(js6)	b	t	E	F(H8)	G	H	I	J	K	M	L1	L2(电机型号)
PC063	1.5	18	21	11	4	12.5	23	70	105	114	140	43	85	4-M6×10	47	202(63B5型)
	2	20	28	※14	5	16	30									
PC071	3	20	27	14	5	16	30	80	120	135	160	54	100	4-M6×10	57	220（71B5型）
	3	32	37	※19	6	21.5	40									
PC080	3	32	40	19	6	21.5	40	110	160		200	66	130	4-M8×11	74	255（80B5型）
	4	40	50	※24	8	27	50									
	4	50	60	※28	8	31	60									
PC090	3	32	40	※19	6	21.5	40	110	160		200	66	130	4-M8×11	74	265（90B5型） 290（90LB5型）
	3	40	50	24	8	27	50									
	3	50	60	※28	8	31	60									

注:表中所列输出轴径“D(js6)”没有打”※“为有标准规格,打有”※“为非标规格,用户可根据需要选用。

Note: The output shaft's diameter D(js6) with "※" provided in the table is a non-standard specification, while the diameter without "※" is one that is standard. The user may choose between both of them according to their needs.

PC+WMRV 组合型减速机组合方式 Combination of PC+WMRV reducer

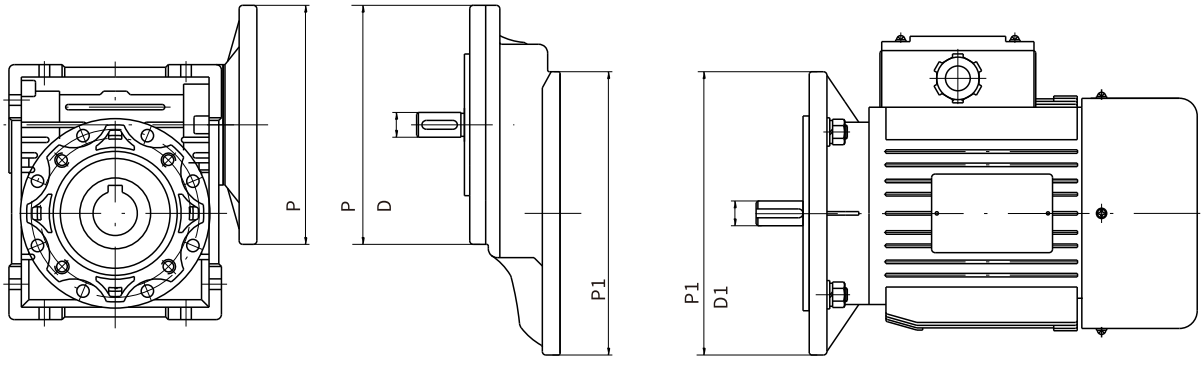

PC+WMRV		电机型号-P1/D1 motor type	P/D	(P/D)	备注 Remarks
PC063+	WMRV40 WMRV50 WMRV63	63B5-Φ140/Φ11	Φ105/Φ11	(Φ105/Φ14)	蜗杆减速机配输入法兰71B14型 Worm reducer is provided with 71B14 type input flange
PC071+	WMRV50 WMRV63 WMRV75 WMRV90	71B5-Φ160/Φ14	Φ120/Φ14	(Φ120/Φ19)	蜗杆减速机配输入法兰80B14型 Worm reducer is provided with 80B14 type input flange
PC080+	WMRV75 WMRV90 WMRV110 WMRV130	80B5-Φ200/Φ19	Φ160/Φ19	(Φ160/Φ24) (Φ160/Φ28)	蜗杆减速机配输入法兰71B5型 Worm reducer is provided with 71B5 type input flange
PC090+	WMRV110 WMRV130	90B5-Φ200/Φ24	Φ160/Φ24	(Φ160/Φ19) (Φ160/Φ28)	蜗杆减速机配输入法兰71B5型 Worm reducer is provided with 71B5 type input flange

注:打括号的尺寸为非标规格,用户可以根据需要选用。
Note: The dimension with brackets is a non-standard specification; the user may select it based on their needs.

蜗杆减速机型号 Type	蜗杆减速机速比 (I)	PC063		PC071		PC080			PC090		
		Φ105/Φ11 i=3	Φ105/Φ14 i=3	Φ120/Φ14 i=3	Φ120/Φ19 i=3	Φ160/Φ19 i=3	ϕ160/ϕ24 i=3	ϕ160/ϕ28 i=3	Φ160/Φ19 i=2.42	Φ160/Φ24 i=2.42	Φ160/Φ28 i=2.42
WMRV40	25										
	30										
	40										
	50										
	60										
	80										
	100										
WMRV50	25										
	30										
	40										
	50										
	60										
	80										
	100										
WMRV63	25										
	30										
	40										
	50										
	60										
	80										
	100										
WMRV75	25										
	30										
	40										
	50										
	60										
	80										
	100										
WMRV90	25										
	30										
	40										
	50										
	60										
	80										
	100										
WMRV110	25										
	30										
	40										
	50										
	60										
	80										
	100										
WMRV130	25										
	30										
	40										
	50										
	60										
	80										
	100										

PC+WMRV组合型减速机安装方式
Installation form of PC+WMRV combined reducer

B3	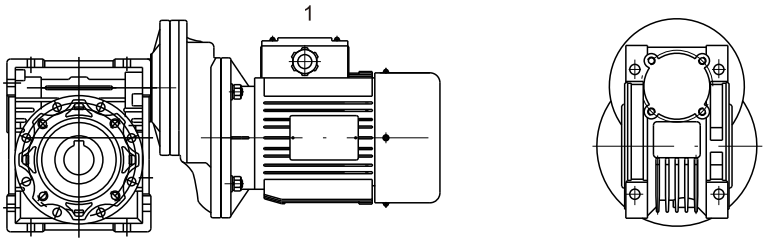		
B8	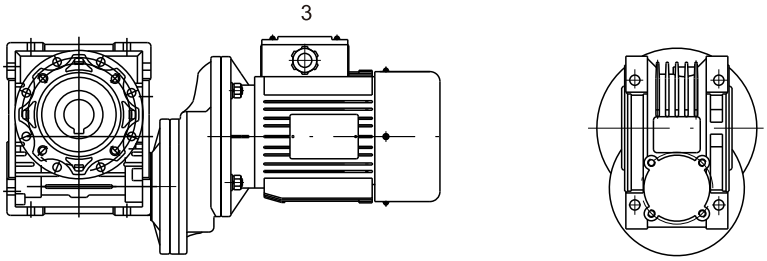		
B6	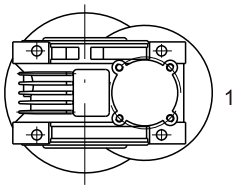	B7	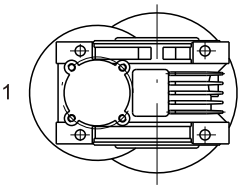
V5	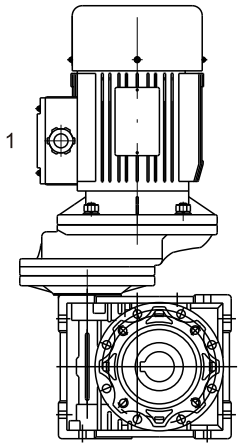	V6	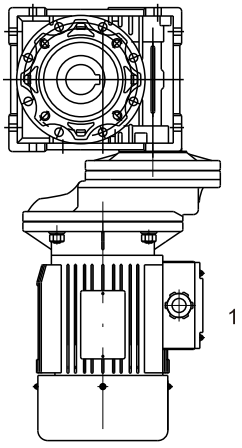

注意:1. 如无特殊说明，以B3为标准安装方式
2. 无注明安装方式时,请与我公司技术部联系

Note:1. If there is no specific description,B3 is regarded as the standard mounting position.
2. If no installation form described. please contact our technical department.

PC+WMRV组合型减速机标记方式
Marking form of PC+WMRV combined reducer

□□/□□-□-□-□-□-□-□-□

接线盒方向：1、2、3、4（参考PC系列电机接线盒方向，见第39页）
The Position of terminal box :1、2、3、4(Refer Page No. 40)

输出要求：YZ、DZ1、DZ2、SZ，不配省略（参考RV系列相关尺寸，见第3页）
Output shaft requirement:YZ、DZ1、DZ2、SZ,omiting without it
(Refer Page No. 3)

安装附件要求：F1、F2、FL1、FL2、TA;不配省略（参考RV系列相关尺寸，见第3页）
The requirements for installing accessories:F1、F2、omit without it
(Refer Page No. 3)

安装方式：**B3**、**B6**、**B7**、**B8**、**V5**、**V6**（见“**PC+WMRV**组合型减速机安装方式”第**39**页）
Installation from:B6、B7、B8、V5、V6
(Refer Page No. 40)

减速机公称速比
Nominal ratio

减速机所配电机类型及功率，不配省略（电机应注明电机极数"P",4P时省略）
The type and power of motor on the reducer, omit without it
(Pole number“P”shall be indicated om the motor; omitting when 4P)

后置蜗杆减速机机型代号：40、50、63、75、90、110、130
Size of WMRV reducer : 40, 50, 63, 75, 90, 110, 130.

后置蜗杆减速机机型：WMRV型
Type of Worm reducer : WMRV type

前置减速机机座规格代号：063、071、080、090
Size of PC Series reducer : 063, 071, 080, 090

前置减速机机型：PC型
Type of reducer : PC type

PC+WMRV组合型减速机标记方式示例
Sign example of PC+WMRV combined reducer

PC071/WMRV75 - Y0.18(6P) - 180 - V5 - F1 - DZ1 - 1

接线盒方向：1
The Position of Terminal box : 1

输出轴要求：DZ1
Outprt shaft requirement:DZ1

安装附件要求：F1
The requirements for installing accessories:F1

安装方式：V5
Installation from:V5

减速机公称速比：180
Nominal ratio:180

减速机所配电机类型及功率：Y0.18,电机极数：6P
The type and power of motor on the reducer:Y0.18,Pole number:6P

后置蜗杆减速机机座规格代号：75
Size of WMRV reducer :75

后置蜗杆减速机机型:WMRV型
Type of Worm reducer : WMRV type

前置减速机机座规格代号：071
Size of PC Series reducer : 071

前置减速机机型：PC型
Type of reducer : PC type

PC+WMRV组合型减速标记机方式示例：
Sign example of PC+WMRV combined reducer

PC063/WMRV63 - Y0.18 - 180 - B8 - 3

- 接线盒方向:3
  The Position of terminal box :3
- 安装方式:B8
  Installation form:B8
- 减速机公称速比:180
  Nominal ratio:180
- 减速机所配电机类型及功率:Y0.18
  The type and power of motor on the reducer Y0.18
- 后置蜗杆减速机机座规格代号:63
  Size of WMRV reducer :63
- 后置蜗杆减速机型号:WMRV型
  Type of Worm reducer : WMRV
- 前置减速机机座规格代号:063
  Size of PC Series reducer : 063
- 前置减速机机型:PC型
  Type of reducer : PC type

PC+WMRV组合型减速机外形尺寸
Outline dimension of PC+WMRV combined reducer

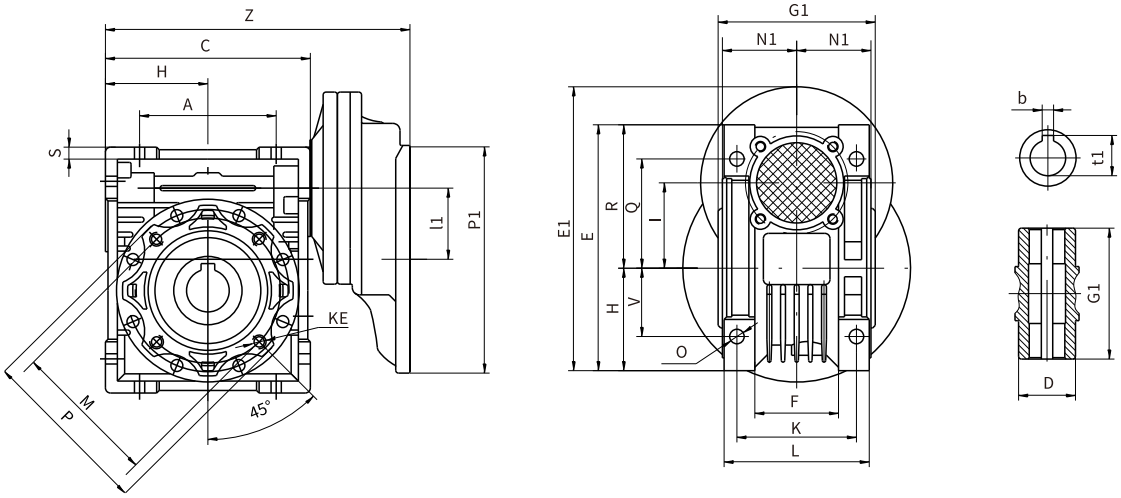

PC+WMRV组合		A	C	D(H7)	t1	b	E	E1	F	G1	H	I	I1	K
PC 063+	WMRV40	70	100	18	20. 8	6	121.5	147	43	78	50	40	40	60
	WMRV50	80	120	25	28. 3	8	145	167	49	92	60	50	40	70
	WMRV63	100	144	25	28. 3	8	174	192	67	112	72	63	40	85
PC 071+	WMRV50	80	120	25	28. 3	8	145	177.5	48	92	60	50	50	70
	WMRV63	100	144	25	28. 3	8	174	202.5	67	112	72	63	50	85
	WMRV75	120	172	28	31. 3	8	205	228.5	72	120	86	75	50	90
	WMRV90	140	206	35	38. 3	10	238	260.5	72	140	103	90	50	100
PC 080+	WMRV75	120	172	28	31. 3	8	205	241	72	120	86	75	63	90
	WMRV90	140	206	35	38. 3	10	238	273	72	140	103	90	63	100
	WMRV110	170	252.5	42	45. 3	12	295	317.5		155	127.5	110	63	115
	WMRV130	200	292.5	45	48. 8	14	335	357.5		170	147.5	130	63	120
PC 090+	WMRV110	170	252.5	42	45. 3	12	295	317.5		155	127.5	110	63	115
	WMRV130	200	292.5	45	48. 8	14	335	357.5		170	147.5	130	63	120

PC+WMRV组合		KE	L	M	N(h8)	N1	O	P	P1	Q	R	V	S	Z
PC 063+	WMRV40	4-M8×8	71	75	60	36.5	6.5	87	140	55	71.5	35	6.5	167
	WMRV50	4-M8×10	85	85	70	43.5	8.5	100	140	64	85	40	7	187
	WMRV63	8-M8×14	103	95	80	53	8.5	110	140	80	102	50	8	214
PC 071+	WMRV50	4-M8×10	85	85	70	43.5	8.5	100	160	64	85	40	7	197
	WMRV63	8-M8×14	103	95	80	53	8.5	110	160	80	102	50	8	224
	WMRV75	8-M8×14	113	115	95	57	11	140	160	93	119	60	10	255.5
	WMRV90	8-M10×18	130	130	110	67	13	160	160	102	135	70	11	289.5
PC 080+	WMRV75	8-M8×14	113	115	95	57	11	140	200	93	119	60	10	272.5
	WMRV90	8-M10×18	130	130	110	67	13	160	200	102	135	70	11	306.5
	WMRV110	8-M10×18	142	165	130	74	14	200	200	125	167.5	85	15	357.5
	WMRV130	8-M12×21	155	215	180	81	16	250	200	140	187.5	10	15	397.5
PC 090+	WMRV110	8-M10×18	142	165	130	74	14	200	200	125	167.5	85	15	357.5
	WMRV130	8-M12×21	155	215	180	81	16	250	200	140	187.5	100	15	397.5

PC及PC+WMRV组合型减速机技术参数
Techinical data of PC and PC+WMRV combined reducer

P1 (KW)	n2 (r/min)	M2 (N.M)	f.s	i	减速机型号 Type	电机型号 Motor type	
						国内型号 Home type	安装结构 Mounting
0.12	466.7	2.4	2.08	3	PC063	Y2-631-4	IMB5
	18.7	42.4	1.20	75	PC063+WMRV40	Y2-631-4	IMB5
	156.6	46.0	1.20	90			
	11.7	57.0	0.90	120			
	9.3	66.0	0.70	150			
	7.8	74.0	0.60	180			
	9.3	67.5	1.30	150	PC063+WMRV50	Y2-631-4	IMB5
	7.8	75.0	1.10	180			
	5.8	88.0	0.80	240			
	4.7	98.0	0.70	300			
	5.8	92.3	1.50	240	PC063+WMRV63	Y2-631-4	IMB5
	4.7	103.0	1.20	300			
0.18	466.7	3.6	1.42	3	PC063	Y2-632-4	IMB5
	18.7	63.5	0.80	75	PC063+WMRV40	Y2-632-4	IMB5
	15.6	70.0	0.80	90			
	11.7	85.0	0.60	120			
	18.7	63.5	1.40	75	PC063+WMRV50	Y2-632-4	IMB5
	15.6	71.0	1.50	90			
	11.7	87.0	1.10	120			
	9.3	101.0	0.90	150			
	7.8	113	0.70	180			
	5.8	133.0	0.60	240			
	9.3	103.1	1.70	150	PC063+WMRV63	Y2-632-4	IMB5
	7.8	117.0	1.40	180			
	5.8	139.0	1.00	240			
	4.7	155.0	0.80	300			
	300.0	5.6	1.97	3	PC071	Y2-711-6	IMB5
	12.0	94.5	1.20	75	PC071+WMRV50	Y2-711-6	IMB5
	10.0	105.0	1.40	90			
	7.5	126.0	1.00	120			
	12.0	97.4	2.20	75	PC071+WMRV63	Y2-711-6	IMB5
	10.0	107.0	2.40	90			

PC及PC+WMRV组合型减速机技术参数
Techinical data of PC and PC+WMRV combined reducer

P1 (KW)	n2 (r/min)	M2 (N.M)	f.s	i	减速机型号 Type	电机型号 Motor type	
						国内型号 Home type	安装结构 Mounting
0.18	7.5	131.0	1.80	120	PC071+WMRV63	Y2-711-6	IMB5
	6.0	152.0	1.40	150			
	5.0	168.0	1.20	180			
	3.8	197.0	0.90	240			
	3.0	218.0	0.70	300			
	5.0	178.8	1.70	180	PC071+WMRV75	Y2-711-6	IMB5
	3.8	211.0	1.20	240			
	3.0	235.0	1.00	300			
0.25	466.7	5.0	2.20	3	PC071	Y2-711-4	IMB5
	18.7	88.3	1.00	75	PC071+WMRV50	Y2-711-4	IMB5
	15.6	98.0	1.10	90			
	11.7	121.0	0.80	120			
	18.7	90.8	1.80	75	PC071+WMRV63	Y2-711-4	IMB5
	15.6	100.0	2.00	90			
	11.7	125.0	1.50	120			
	9.3	143.0	1.20	150			
	7.8	163.0	1.00	180			
	5.8	192.0	0.70	240			
	4.7	215.0	0.60	300			
	9.3	150.9	1.70	150	PC071+WMRV75	Y2-711-4	IMB5
	7.8	172.0	1.40	180			
	5.8	201.0	1.10	240			
	4.7	230.0	0.90	300			
	300.0	7.8	1.41	3	PC071	Y2-712-6	IMB5
	12.0	135.3	1.60	75	PC071+WMRV63	Y2-712-6	IMB5
	10.0	148.0	1.80	90			
	7.5	181.0	1.30	120			
	6.0	211.0	1.00	150			
	12.0	139.3	2.40	75	PC071+WMRV75	Y2-712-6	IMB5
	10.0	155.0	2.50	90			
	7.5	191.01	1.90	120			
	6.0	219.0	1.50	150			
	5.0	248.0	1.20	180			
	5.0	262.6	1.90	180	PC071+WMRV90	Y2-712-6	IMB5
	3.8	318.0	1.40	240			
	3.0	358.0	1.10	300			
0.37	466.7	7.4	1.49	3	PC071	Y2-712-4	IMB5
	18.7	134.4	1.2	75	PC071+WMRV63	Y2-712-4	IMB5
	15.6	148.0	1.40	90			
	11.7	185.0	1.00	120			
	9.3	212.0	0.80	150			
	18.7	138.2	1.8	75	PC071+WMRV75	Y2-712-4	IMB5
	15.6	154.0	1.9	90			
	11.7	191.0	1.50	120			
	9.3	223.0	1.10	150			
	7.8	254.0	0.90	180			
	7.8	268.0	1.50	180	PC071+WMRV90	Y2-712-4	IMB5
	5.8	321.0	1.10	240			
	4.7	371.0	0.90	300			
	300.0	11.5	1.91	3	PC080	Y2-801-6	IMB5
	12.0	206.1	1.60	75	PC080+WMRV75	Y2-801-6	IMB5
	10.0	230.0	1.70	90			

PC及PC+WMRV组合型减速机技术参数

Techinical data of PC and PC+WMRV combined reducer

P1 (KW)	n2 (r/min)	M2 (N.M)	f.s	i	减速机型号 Type	电机型号 Motor type	
						国内型号 Home type	安装结构 Mounting
0.37	7.5	283.0	1.30	120	PC080+WMRV75	Y2-801-6	IMB5
	6.0	324.0	1.00	150			
	6.0	347.5	1.60	150	PC080+WMRV90	Y2-801-6	IMB5
	5.0	389.0	1.30	180			
	3.8	471.0	1.00	240			
	3.8	508.8	1.60	240	PC080+WMRV110	Y2-801-6	IMB5
	3.0	577.0	1.30	300			
0.55	466.7	11.0	2.03	3	PC080	Y2-801-4	IMB5
	18.7	205.4	1.20	75	PC080+WMRV75	Y2-801-4	IMB5
	15.6	230.0	1.30	90			
	11.7	284.0	1.00	120			
	9.3	332.0	0.80	150			
	15.6	239.7	2.30	90	PC080+WMRV90	Y2-801-4	IMB5
	11.7	297.0	1.60	120			
	9.3	355.0	1.30	150			
	7.8	398	1	180			
	5.8	477	0.8	240			
	7.8	425.5	1.80	180	PC080+WMRV110	Y2-801-4	IMB5
	5.8	513.0	1.30	240			
	4.7	597.0	1.00	300			
	300.0	17.2	1.29	3	PC080	Y2-802-6	IMB5
	12.0	306.4	1.10	75	PC080+WMRV75	Y2-802-6	IMB5
	10.0	341.0	1.10	90			
	10.0	357.2	2.00	90	PC080+WMRV90	Y2-802-6	IMB5
	7.5	441.0	1.40	120			
	6.0	516.0	1.10	150			
	5.0	578.0	0.90	180			
	7.5	462.2	2.60	120	PC080+WMRV110	Y2-802-6	IMB5
	6.0	552.0	2.00	150			
	5.0	620.0	1.60	180			
	3.8	756.0	1.10	240			
	3.8	756.4	1.60	240	PC080+WMRV130	Y2-802-6	IMB5
	3.0	858.0	1.30	300			
0.75	466.0	15.0	1.47	3	PC080	Y2-802-4	IMB5
	18.7	280.1	0.90	75	PC080+WMRV75	Y2-802-4	IMB5
	15.6	313.0	1.00	90			
	15.6	336.9	1.70	90	PC080+WMRV90	Y2-802-4	IMB5
	11.7	405.0	1.20	12			
	9.3	483.0	0.90	150			
	7.8	543.0	0.70	180			
	11.7	429.8	2.20	120	PC080+WMRV110	Y2-802-4	IMB5
	9.3	506.0	1.70	150			
	7.8	580.0	1.30	180			
	5.8	700.0	0.90	240			
	5.8	712.2	1.40	240	PC080+WMRV130	Y2-802-4	IMB5
	4.7	813.0	1.10	300			
	376	18.7	1.91	2.42	PC090	Y2-90S-6	IMB5
	12.4	392.9	3.20	72.6	PC090+WMRV110	Y2-90S-6	IMB5
	9.3	508.0	2.30	96.8			
	7.4	607.0	1.80	121			
	6.2	682.0	1.50	145.2			
	4.6	832.0	1.00	193.6			

PC及PC+WMRV组合型减速机技术参数
Techinical data of PC and PC+WMRV combined reducer

P1 (KW)	n2 (r/min)	M2 (N.M)	f.s	I	减速机型号 Type	电机型号 Motor type	
						国内型号 Home type	安装结构 Mounting
0.75	12.4	398.7	4.40	72.6	PC090+WMRV130	Y2-90S-6	IMB5
	9.3	508	3.2	96.8			
	7.4	607	2.6	121			
	6.2	682.0	2.10	145.2	PC080+WMRV130	Y2-90S-6	IMB5
	4.6	832.0	1.50	193.6			
	3.7	944.0	1.20	242			
1.1	578.5	17.8	2.00	2.42	PC090	Y2-90S-4	IMB5
	19.3	392.2	2.50	72.6	PC090+WMRV110	Y2-90S-4	IMB5
	14.5	508.0	1.80	96.8			
	11.6	599.0	1.50	121			
	9.6	686.0	1.10	145.2			
	7.2	828.0	0.80	193.6			
	19.3	397.7	3.50	72.6	PC080+WMRV130	Y2-90S-4	IMB5
	14.5	508.0	2.60	96.8			
	11.6	608.0	2.00	121			
	9.6	686.0	1.60	145.0			
	7.2	843.0	1.20	193.6			
	5.8	962.0	0.90	242			
	376.0	27.4	1.30	2.42	PC090	Y2-90L-6	IMB5
	12.4	576.2	2.20	72.6	PC090+WMRV110	Y2-90L-6	IMB5
	9.3	746.0	1.60	96.8			
	7.4	890.0	1.20	121			
	6.2	1000.0	1.00	145.2			
	12.4	584.7	3.00	72.6	PC090+WMRV130	Y2-90L-6	IMB5
	9.3	746.0	2.20	96.8			
	7.4	890.0	1.70	121			
	6.2	1000.0	1.40	145.2			
	4.6	1220.0	1.00	193.6			
1.5	578.5	24.3	1.47	2.42	PC090	Y2-90L-4	IMB5
	19.3	534.9	1.90	72.6	PC090+WMRV110	Y2-90L-4	IMB5
	14.5	693.0	1.30	96.8			
	11.6	817.0	1.10	121			
	9.6	936.0	0.80	145.2			
	19.3	542.3	2.60	72.6	PC090+WMRV130	Y2-90L-4	IMB5
	14.5	693.0	1.90	96.8			
	11.6	830.0	1.50	121			
	9.6	936.0	1.10	145.2			
	7.2	1148.9	0.80	194			
2.2	1157.0	17.9	2.00	2.42	PC090	Y2-90L-2	IMB5
	38.6	397.7	2.10	72.6	PC090+WMRV110	Y2-90L-2	IMB5
	28.9	516.7	1.50	96.8	PC090+WMRV130	Y2-90L-2	
	23.1	617.0	1.20	121			
	38.6	408.6	2.90	72.6			IMB5
	28.9	545.0	2.00	96.8			
	23.1	654.0	1.60	121			
	19.3	752.0	1.30	145.2			

MB、MBN SERIES

planetaey cone-disk variatior

MB、MBN 系列行星椎盘无极减速机

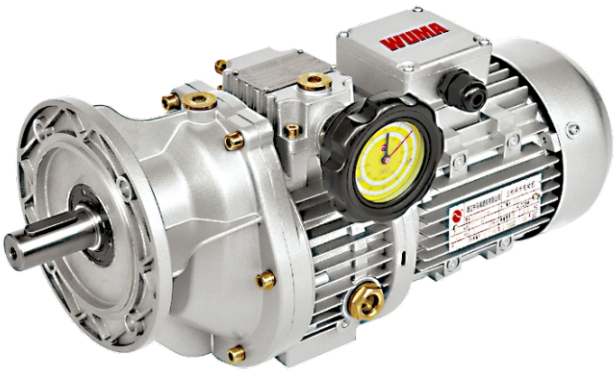

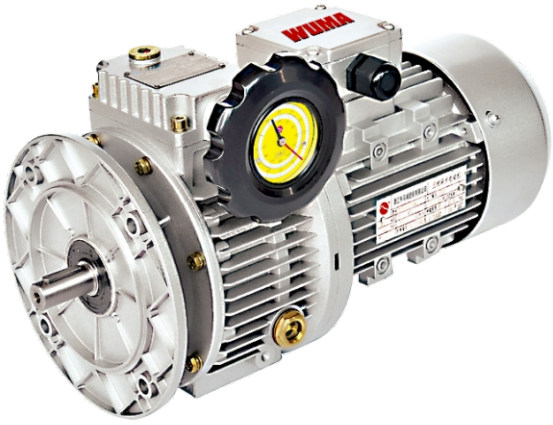

MB、MBN系列行星锥盘无级变速机
MB、MBN series planetary cone-disk variator

概述

行星锥盘无级变速机系采用了国内外先进的技术而设计的。它不仅可广泛地用于食品、制药、塑料、造纸、陶瓷、烟草、印刷等轻工业部门，而且广泛用于机床、石化、冶金等重工部门及交通运输业。它的优点是：

1、高强度：在加冲击负载逆转时，本机性能可靠、能精确的传动，无后座力，并有足够的强度。
2、变速范围大：变速范围为5，即输出速比可在1:1.45至1:7.25之间任意变化。
3、调速精度高：调速精度为0.5~1转。
4、性能稳定：本机的传动部件都经过特殊热处理、并经精密加工。接触和润滑良好、运行平稳、噪音低、寿命长。
5、结构紧凑,体积小，重量轻。
6、组合能力强：本机能与各种减速机组合，实现低速无级变速，因此它具良好的适应性。

Overview

Planetary cone-disk variator is designed with the advanced know-how of both at home and abroad and can be used for both light-industrial traded, such as food, pharmaceutical, plastic, paper-making,ceramic,tobacco, printing etc., and heavy-industrial trades, such as tool machine, petrochemistry, metallurgy, metallurgy etc., as well as for the trades of communication and transportation. It features as below:

1. High strength: when reversedly running with an impact load, it is of a reliable performance, able to precisely drive, without a recoil and with a sufficient strength,
2. Large range of speed variation: its range of speed variation is 5,i.e. its output speed ratio can be varied be between 1:1.45 to 1:25.
3. High precision of speed regulation: the precision of speed regulation is 0.5-1 turn.
4. Stable performance: its driving parts are meticulously processed with specially heat treatment, resulting in good contact and lubrication, stable running, low noise and long durability.
5. Compact structure, small volume and light weight.
6. Strong capability to be combined: it is of a good capability to be combined with various reducers to realize low-speed stepless variation.

结构与工作原理、润滑油品种

1、行星锥盘无级变速机（见图）

带锥度的太阳轮（12)和压盘(13)被一组碟形弹簧(14)压紧,输入轴(15)与太阳轮用键联接,组成压紧的输入装置。一组带锥度的行星轮（10）内侧夹在压紧的太阳轮和压盘之间，外侧夹在带锥度的定环（11）和调速凸轮（9）之间，当输入装置转动时，由于定环和调速凸轮固定不动，行星轮就沿定环作纯滚动，且绕输入轴作公转，通过行星轮轴及滑动轴承（5）而带动行星架（2）及输出轴（1）转动。调速时转动手轮，由于手轮带动调速螺杆，使平面凸轮相对转动，产生轴向移动，从而均匀改变调速凸轮和固定环之间的间隔，最后改变了行星轮与太阳轮、压盘及固定环、调速凸轮摩擦处的工作半径，实现无级调速。

Structure and working principle

1、Planetary cone-disk variator (see the drawing)

Both solar-wheel with a conicity (12) and press-plate (13) are jammed by a group of butterfly springs (14) and the input shaft(15)is linked with the solar-wheel by a key to form a jammed input device. A group of planetary wheels with a conicity(10)，with their inner side clamped in between the jammed solar-wheel and the pres-plate and outer side between the fixed ring with a conicity（11） and the speed-regulating can (9),when the input device turns, roll purely along with the fixed ring due to both fixed ring and speed regulating cam fixed without motion and make revolution round the input shaft to drive both planetary rack(2) and output shaft(1) to run via the planetary-wheel shaft and the slide-block bearing(5).To regulate the speed, turn the handwheel, which drives the speed regulating screw to have the surface cam relatively run to produce axial displacement ,and thus to evenly change the space between the speed regulating cam and the fixed ring and, finally, change the working radius at the frictional place of the cam between the planetary-wheel and the solar-wheel and between the press-rack and the fixed ring to realize the stepless speed variation.

性能曲线 Performance Curve

标准型平均效率与输出转速的关系
Relation between the standard-type's mean efficiency and the output rotary speed

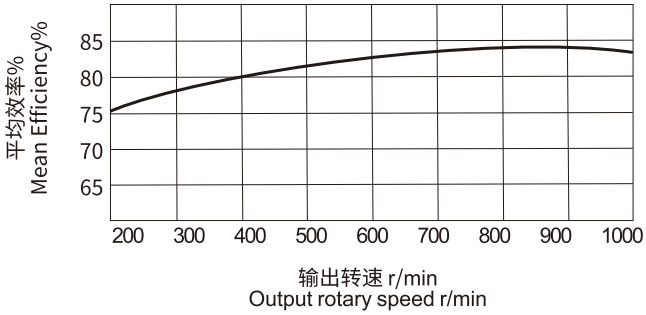

标准型允许输出扭矩与输出转速的关系
Relation between the allowed output torque of standard-type and the output rotary speed

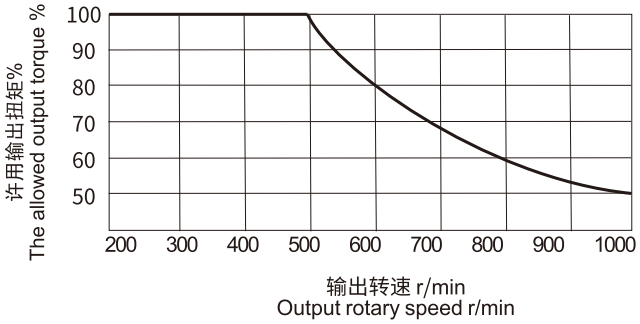

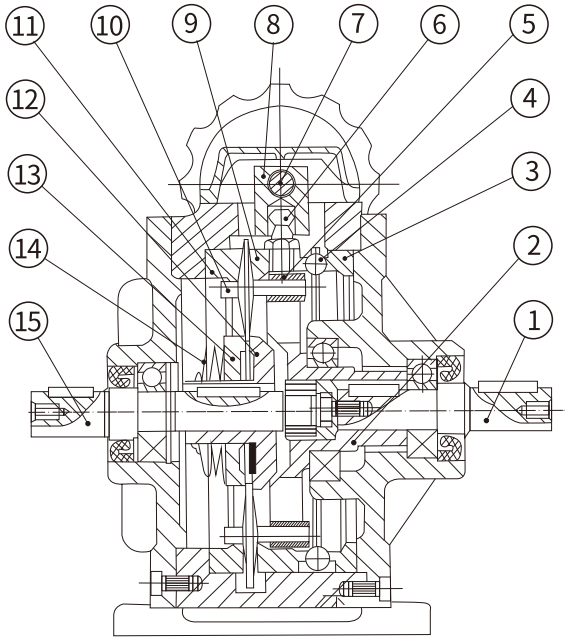

序号	名称	Name
1	输出轴	Output Shaft
2	行星架	Planetary Rack
3	固定平面凸轮	Fixed Surfaceam
4	平面轴承	Surface Bearing
5	滑块轴承	Slide-Block Bearing
6	调速柄	Speed-Regulting Hands
7	调速螺杆	Speed-Regulating Screw
8	调速滑块	Speed-Regulatin
9	调速凸轮	Speed-Regulating Cam
10	行星轮	Planetary Wheel
11	定环	Fixed Ring
12	太阳轮	Solar-Wheel
13	压轮	Press-Wheel
14	碟形弹簧	Butterfly Spring
15	输入轴	Input Shaft

2.润滑油品 Lubricating Oil

	润滑油 Lubricat	Oil Sintetice Synthetic Oil
	环境温度 Ambient Temperature	-25°C ~ + 40°C
ISO		Vg32 Vg46
国内使用 Used in interior		Ub-1 Ub-3
国外使用 User in foreign countries	AGIP	TRANSMISSION V.E A.T.F.DEXRON FLUID
	SHELL	A.T.F.DEXRON
	ESSO	A.T.F.DEXRON
	MOBIL	A.T.F.220
	CASTROL	TQ.DEXRON II
	BP	AUTRAN DX

标记方式： Model sign:

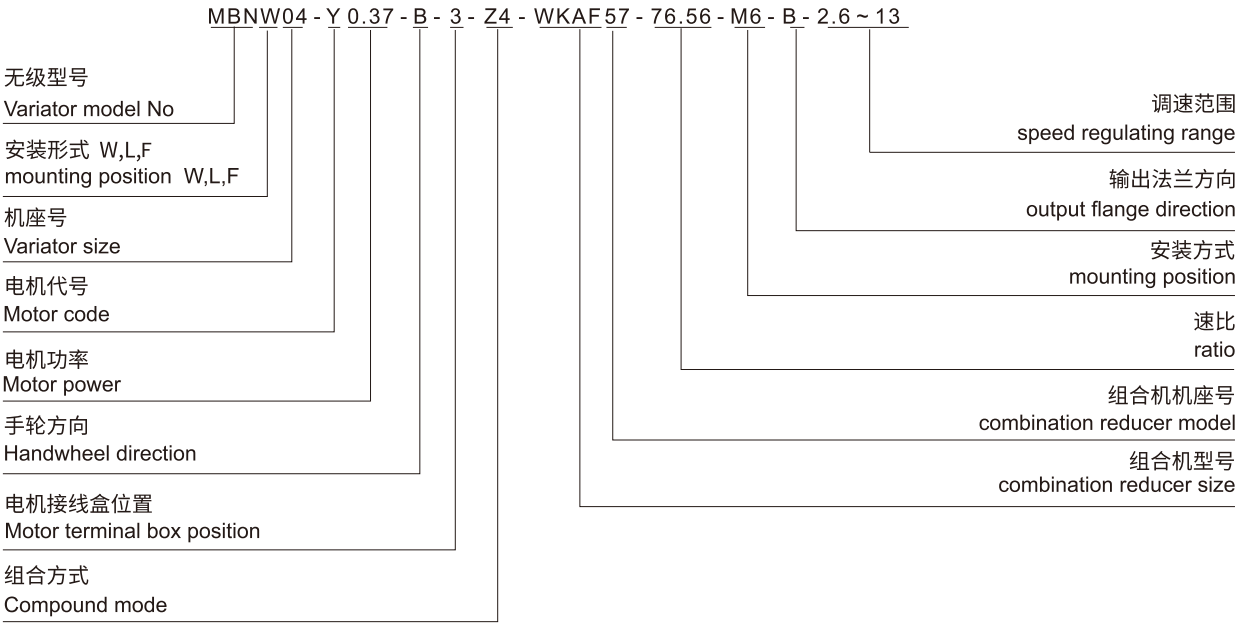

注：① 基本形调速范围为200～1000r/min，所配电机为四级。
② 客户自配电机时，不标注电机代号和功率及调速范围。
③ 轴输入时，在标记后加RZ，比如：MBN04RZ，MBNF04RZ。

Remark:

① When the speed regulating range is 200-1000r/min of basic model, the connecting motor should be 4 pole
② When the motor is provided and connected by customer, it is unnecessary to state the motor code, power and speed regulating range.
③ When it is shaft input, add RZ after the model description. For example: MBN04RZ , MBNF04RZ

1、标记示例：(基本型) Example

MBNW07-Y0.75-A-1-200～1000
MBNW07无级变速机，卧式安装，配0.75KW电机，调速手轮A向，电机接线盒位置1，调速范围200～1000r/min
MBNW07 variator , horizontal mounting positions ,connect with 0.75KW motor, speed regulating handwheel side A, motor terminal box position 1, speed regulating range 200~1000r/min

2、标记示例：(基本型) Example

MBNF07-Y0.75-A-1-200～1000
MBNF07无级变速机，法兰式输出，配0.75KW电机，调速手轮A向，电机接线盒位置1，调速范围200～1000r/min
MBNF07 variator ,flange output, connect with 0.75KW motor, speed regulating handwheel side A, motor terminal box position 1, speed regulating range 200~1000r/min

3、标记示例：(基本型，客户自配电机) Example (motor provided and connected by customer)

MBNW07-A-1
MBNW07无级变速机，卧式安装，客户自配电机，调速手轮A向，电机接线盒位置1
MBNW07 variator, horizontal mounting positions, motor provided and connected by customer, speed regulating handwheel side A

4、标记示例：(基本型，法兰式输出，轴输入) Example (flange output, shaft input)

MBNF07RZ-A-1
MBNF07无级变速机，法兰式输出，轴输入，调速手轮A向，电机接线盒位置1
MBNF07 variator, flange output, shaft input, speed regulating handwheel side A

5、标记示例:(基本型,配6级电机) Example (connect with 6 pole motor)

MBNW07-Y0.55-6P-A-1-130～650
MBNW07无级变速机,卧式安装,配0.55KW6级电机,调速手轮A向,电机接线盒位置1,调速范围130～650r/min
MBNW07 variator , horizontal mounting positions, connect with 0.55KW, 6 pole motor , speed regulating handwheel side A, motor terminal box position 1, speed regulating range 130~650r/min

6、标记示例:(无级与单级齿轮组合) Example (combination of variator and single-stage gear)

MBNW07-Y0.75-A-1-Z1-C-5-M1-40～200
MBNW07无级变速机,卧式安装,配0.75KW电机,调速手轮A向,电机接线盒位置1,组合方式Z1,
配单级齿轮,速比5,安装方式M1,调速范围40～200r/min
MBNW07 variator, connect with 0.75KW motor , speed regulating handwheel side A, motor terminal box position 1, compound mode Z1, with single-stage gear, ratio 5, mounting position M1, speed regulating range 40~200r/min

7、标记示例:(无级与两级齿轮组合) Example (combination of variator and double-stage gear)

MBNW07-Y0.75-A-1-Z1-2C-11-M1-18～90
MBNW07无级变速机,卧式安装,配0.75KW电机,调速手轮A向,电机接线盒位置1,组合方式Z1,配两级齿轮,速比11,
安装方式M1,调速范围18～90r/min
MBNW07 variator, horizontal mounting positions,connect with 0.75KW motor , speed regulating handwheel side A, motor terminal box position 1,compound mode Z1, with double-stage gear, ratio 11, mounting position M1, speed regulating range 18~90r/min

8、标记示例:(无级与摆线组合) Example (combination of variator and cycloid reducer)

MBNF07-Y0.75-A-1-Z1-X3-17-M1-12～58
MBNF07无级变速机,配0.75KW电机,调速手轮A向,电机接线盒位置1,组合方式Z1,配X3摆线减速机,
速比17,安装方式M1,调速范围12～58r/min
MBNF07 variator, connect with 0.75KW motor, speed regulating handwheel side A, motor terminal box position 1, compound mode Z1, connect with X3 cycloid reducer , ratio 17, mounting position M1, speed regulating range 12~58r/min

9、标记示例:(无级与RV系列组合) Example (combination of variator and RV series reducer)

MBNF07-Y0.75-A-1-Z1-RV63-10-M1-19.3～96.5
MBNF07无级变速机,配0.75KW电机,调速手轮A向,电机接线盒位置1,组合方式Z1,配RV63蜗轮减速机,
速比10,安装方式M1,调速范围19.3～96.5r/min
MBNF07 variator , connect with 0.75KW motor, speed regulating handwheel side A, motor terminal box position 1,compound mode Z1, connect with RV63 worm reducer, ratio 10, mounting position M1, speed regulating range 19.3~96.5r/min

10、标记示例:(无级与WR系列组合) Example (combination of variator and WR series reducer)

MBNF07-Y0.75-A-1-Z1-WR57-35.07-M1-5.7～28.5
MBNF07无级变速机,配0.75KW电机,调速手轮A向,电机接线盒位置1,组合方式Z1,
配WR57斜齿轮减速机,速比35.07,安装方式M1,调速范围5.7～28.5r/min
MBNF07 variator, connect with 0.75KW motor, speed regulating handwheel side A, motor terminal box position 1,compound mode Z1, connect with WR57 helical gear reducer, ratio 35.07, mounting position M1, speed regulating range 5.7~28.5r/min

11、标记示例:(无级与WK系列组合) Example (combination of variator and WK series reducer)

MBNF07-Y0.75-A-1-Z1-WK57-30.28-M1-6.6～33
MBNF07无级变速机,配0.75KW电机,调速手轮A向,电机接线盒位置1,组合方式Z1,
配WK57斜齿-螺旋锥齿轮减速机,速比30.28,安装方式M1,调速范围6.6～33r/min
MBNF07 variator , connect with 0.75KW motor, speed regulating handwheel side A, motor terminal box position 1,compound mode Z1, connect with WK57 helical gear-beve l gear reducer, ratio 30.28, mounting position M1, speed regulating range 6.6~33r/min

12、标记示例:(无级与WF系列组合) Example: (Combination of variator and WF series reducer)

MBNF07-Y0.75-A-1-Z1-WF57-44.73-M1-4.5～22.4
MBNF07无级变速机,配0.75KW电机,调速手轮A向,电机接线盒位置1,组合方式Z1,
配WF57平行轴斜齿轮减速机,速比44.73,安装方式M1,调速范围4.5～22.4r/min
MBNF07 variator, connect with 0.75KW motor, speed regulating handwheel side A, motor terminal box position 1, compound mode Z1, connect with WF 57 parallel shaft helical gear reducer, ratio 44.73, mounting position M1, speed regulating range 4.5～22.4 r/min.

13、标记示例:(无级与WS系列组合) Example: (Combination of variator and WS series reducer)

MBNF07-Y0.75-A-1-Z1-WS57-23.2-M1-8.6～43
MBNF07无级变速机,配0.75KW电机,调速手轮A向,电机接线盒位置1,组合方式Z1,
配WS57斜齿-蜗轮减速机,速比23.2,安装方式M1,调速范围8.6～43r/min
MBNF07 variator, connect with 0.75KW motor, speed regulating handwheel side A, motor terminal box position 1, compound mode Z1, connect with WS 57 helical-worm reducer, ratio 23.2, mounting position M1, speed regulating range 8.6～43 r/min.

14、标记示例:(无级与WSAF系列组合) Example: (Combination of variator and WSAF series reducer)

MBNF07-Y0.75-A-1-Z1-WSAF57-23.2-M2-B-φ35-8.6～43
MBNF07无级变速机,配0.75KW电机,调速手轮A向,电机接线盒位置1,组合方式Z1,配WSAF57斜齿-蜗轮减速机,
速比23.2,安装方式M2,输出法兰B向,输出轴孔径φ35,调速范围8.6～43r/min
MBNF07 variator, connect with 0.75KW motor, speed regulating handwheel side A, motor terminal box position 1, compound mode Z1, connect with WSAF 57 helical-worm gear reducer, ratio 23.2, mounting position M2, output flange on side B, output shaft bore φ35, speed regulating range 8.6～43 r/min.

说明:
① 无级变速机不得在输入电机转速小于700r/min时使用。
② 无级变速机只能在运转的情况下调速,不允许停机调速。
③ 无级变速机可配多类型的电机,但建议客户不要配变频电机和制动电机。
④ 无级变速机与其它减速机组合时,按无极变速机确定调速手轮方向和电机接线盒位置。
⑤ 无级变速机与其它减速机组合时,按无极变速机与组合机的相对位置确定组合方式。
⑥ 无级变速机与其它减速机组合时,按组合机确定安装方式。

Remarks:

① It is prohibited to operate the variator when the input speed of motor is less than 700 r/min。
② It only can regulate speed when the variator is in operation.It is prohibited to regulate speed when the variator is poweroff.
③ Variator can connect with various types of motors, but it is recommended not to connect with variable frequency motor and brake motor.
④ When variator combines with other type reducers, it is according to variator to confirm the speed regulating handwheel direction and position of motor terminal box.
⑤ When variator combines with other type reducers, it is according to the relative position between variator and combination reducer to confirm the compound mode.
⑥ When variator combines with other type reducers, it is according to the combination reducer to confirm the mounting position.

调速手轮方向 Speed regulating handwheel direction

A

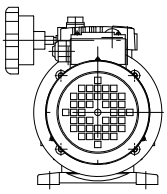

B

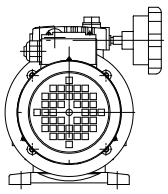

AB

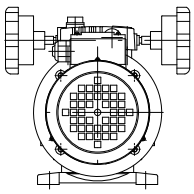

电机接线盒位置 Motor terminal box position

1

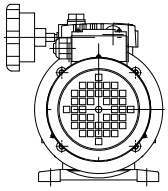

2

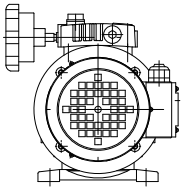

3

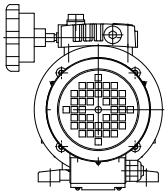

4

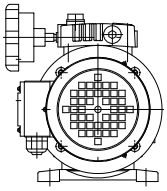

Mb无级与单级齿轮组合方式 Compound mode of MB variator and single-stage gear

Z1

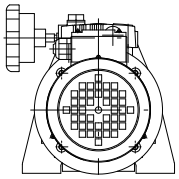

Z2

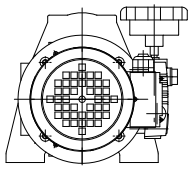

Z3

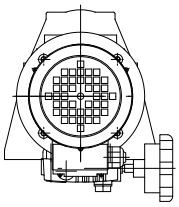

Z4

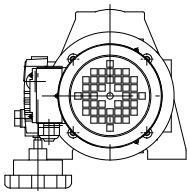

Mb无级与两级齿轮组合方式 Compound mode of MB variator and double-stage gear

Z1

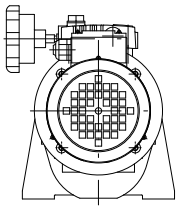

Z2

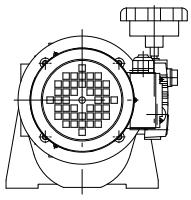

Z3

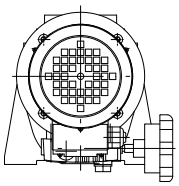

Z4

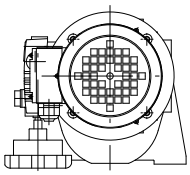

Mb无级与摆线组合方式 Compound mode of MB variator and cycloid reducer

Z1

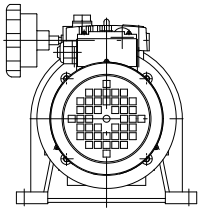

Z2

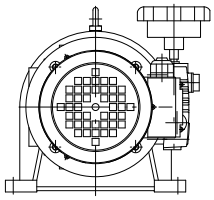

Z3

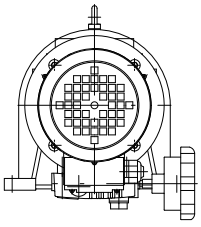

Z4

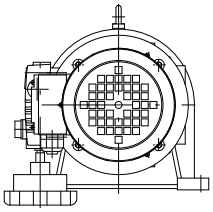

MB无级与WMRV系列组合方式 Compound mode of MB variator and WMRV series reducer

Z1 Z2 Z3 Z4

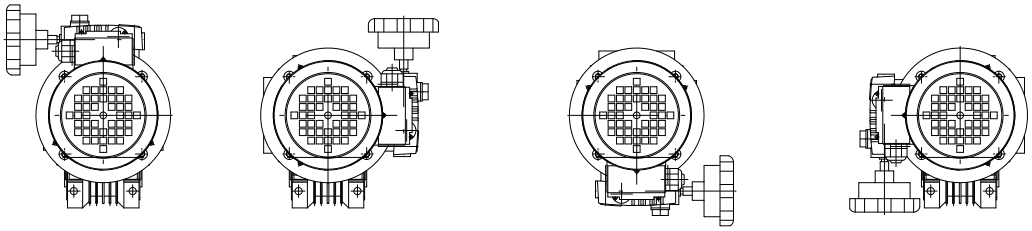

MB无级与WR系列组合方式 Compound mode of MB variator and WR series reducer

Z1 Z2 Z3 Z4

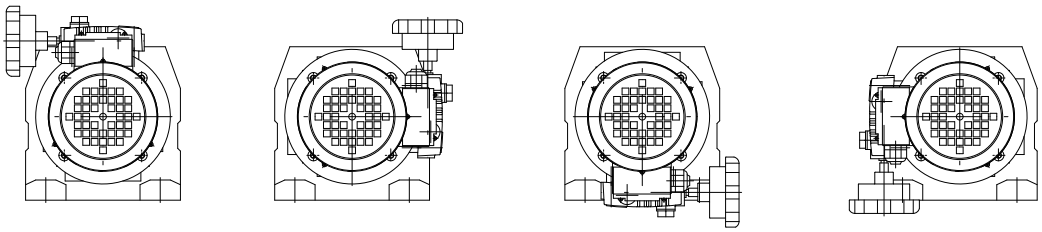

MB无级与WK系列组合方式 Compound mode of MB variator and WK series reducer

Z1 Z2 Z3 Z4

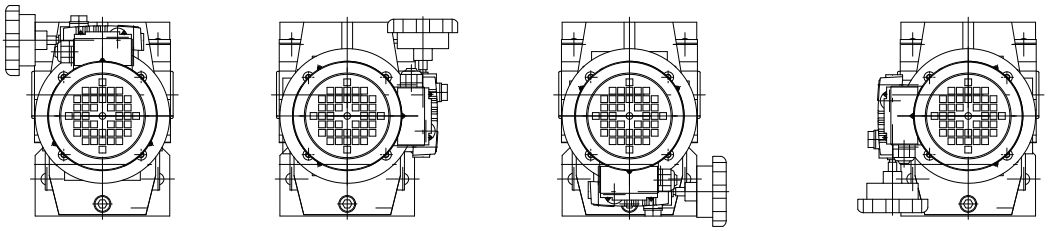

MB无级与WF系列组合方式 Compound mode of MB variator and WF series reducer

Z1 Z2 Z3 Z4

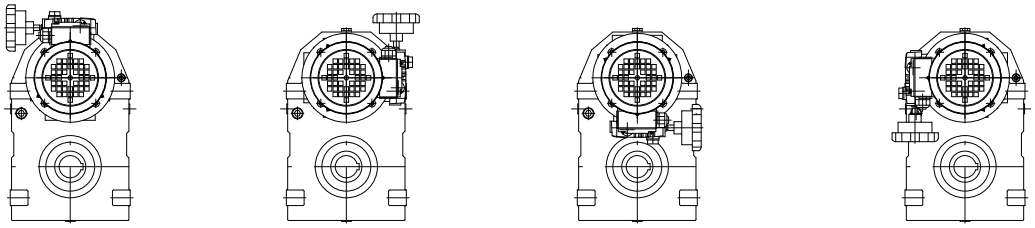

MB无级与WS系列组合方式 Compound mode of MB variator and WS series reducer

Z1 Z2 Z3 Z4

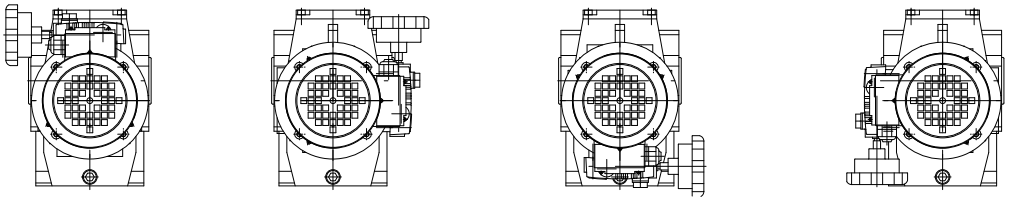

MBW无级变速机安装方式 Mounting position of MBW variator

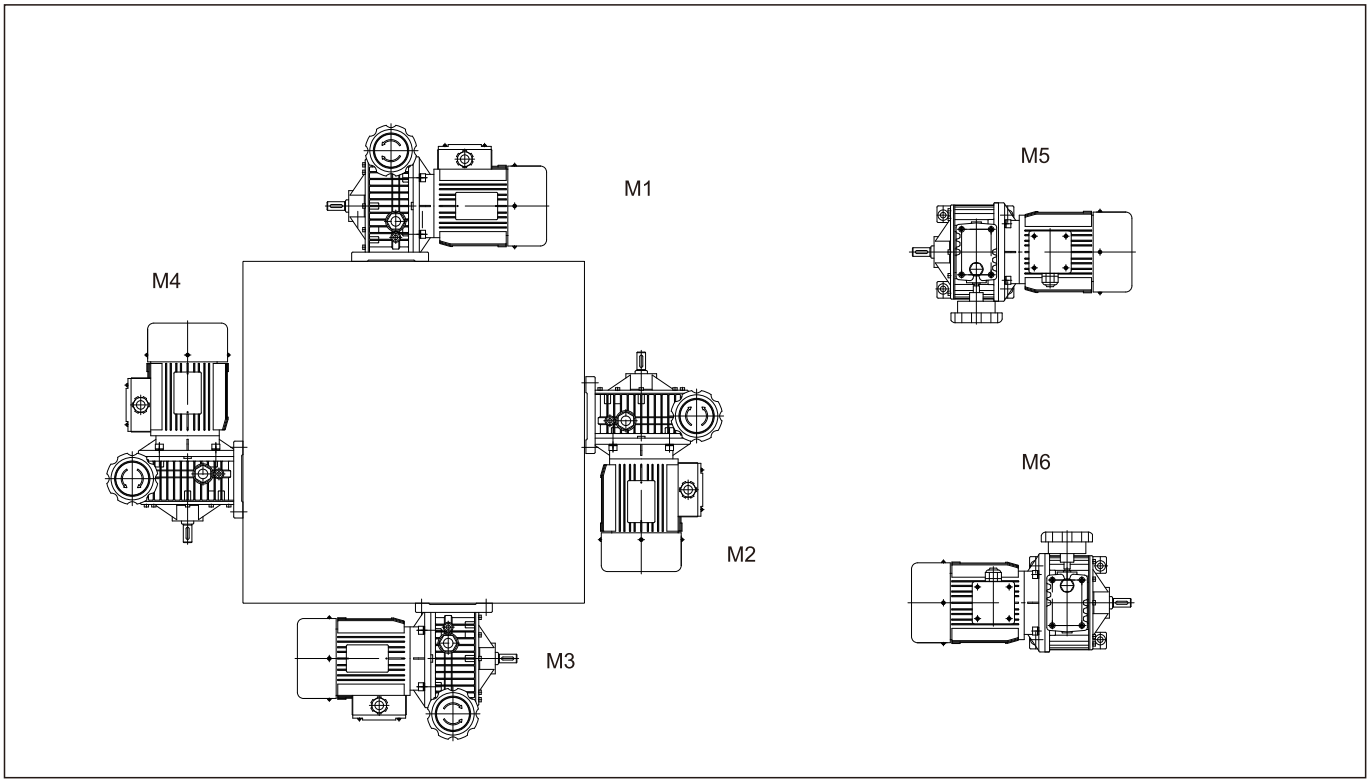

MBF无级变速机安装方式 Mounting position of MBF variator

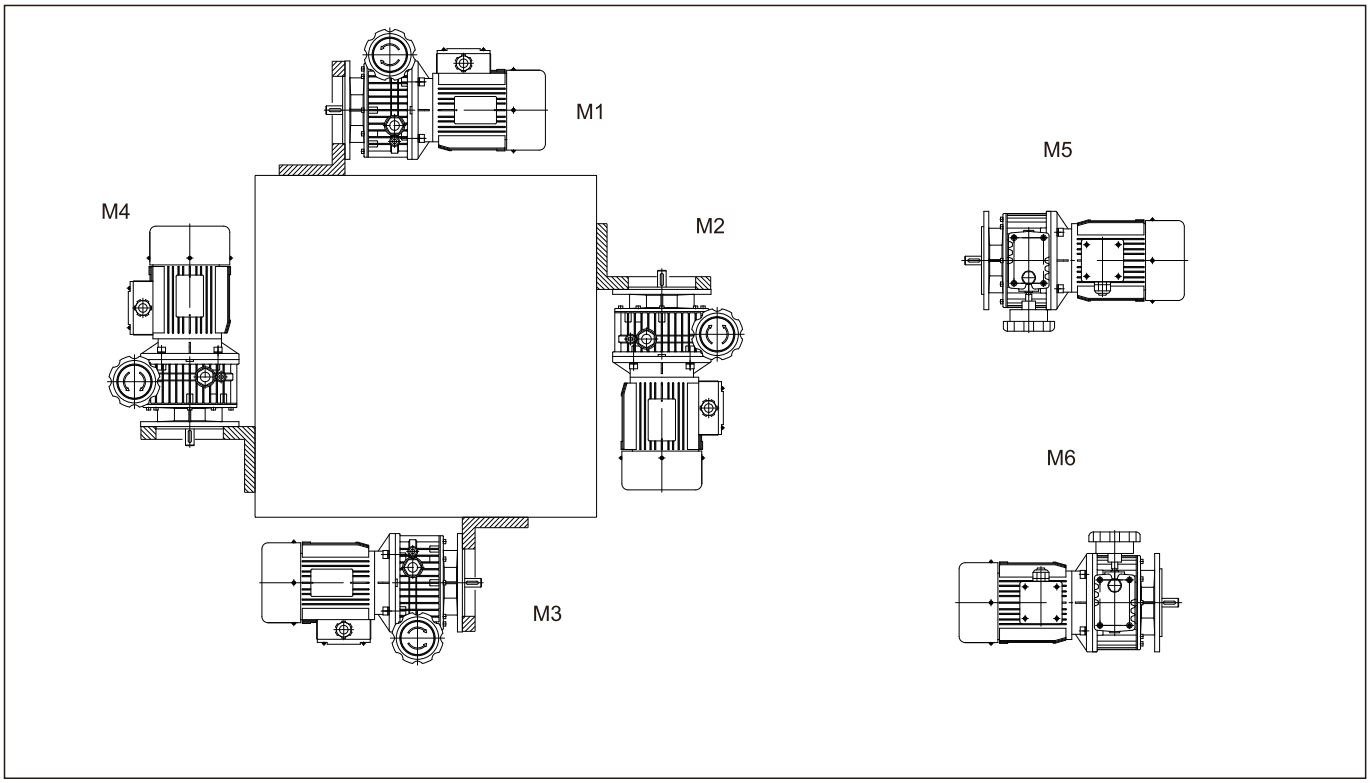

MB无级与单级齿轮组合安装方式 Mounting position of MB variator and single-stage gear

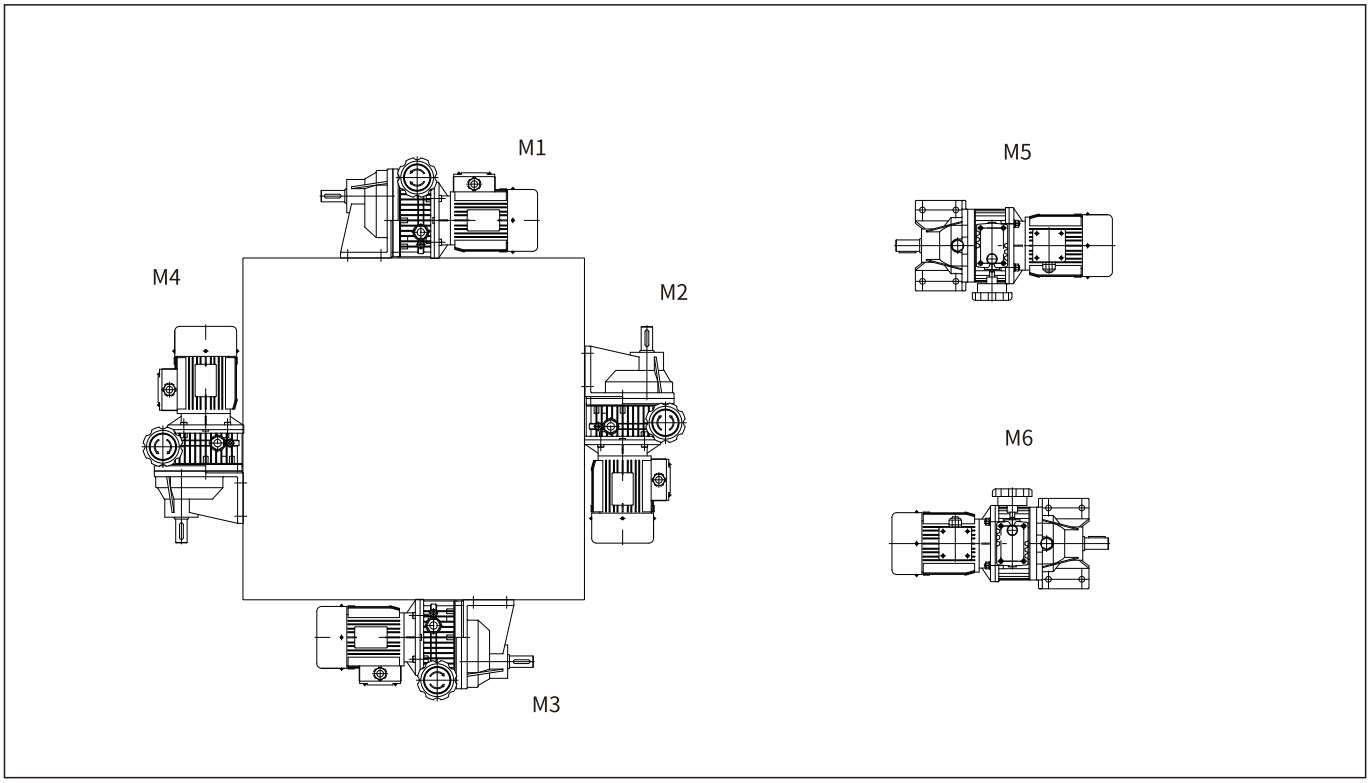

MB无级与两级齿轮组合安装方式 Mounting position of MB variator and double-stage gear

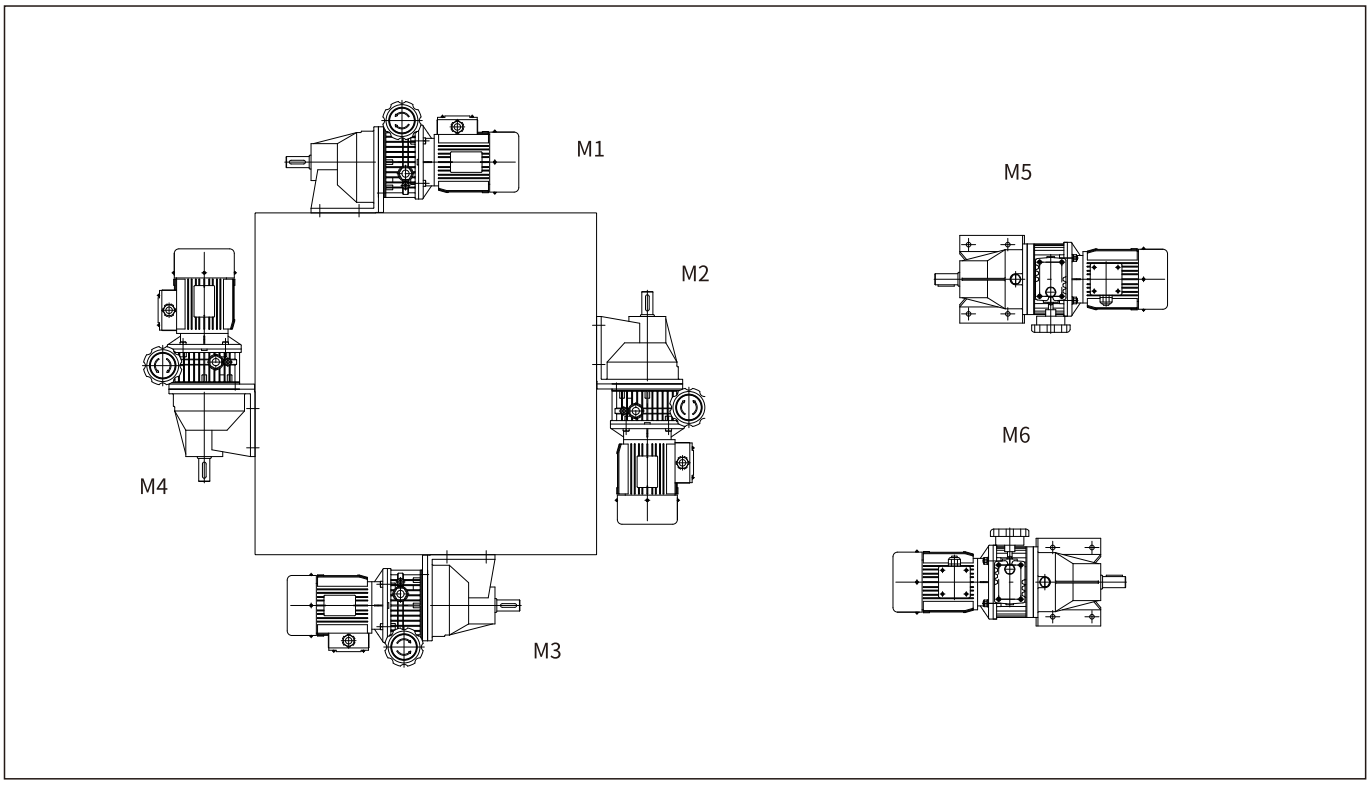

MB无级与摆线组合安装方式 Mounting position of MB variator and cycloid reducer

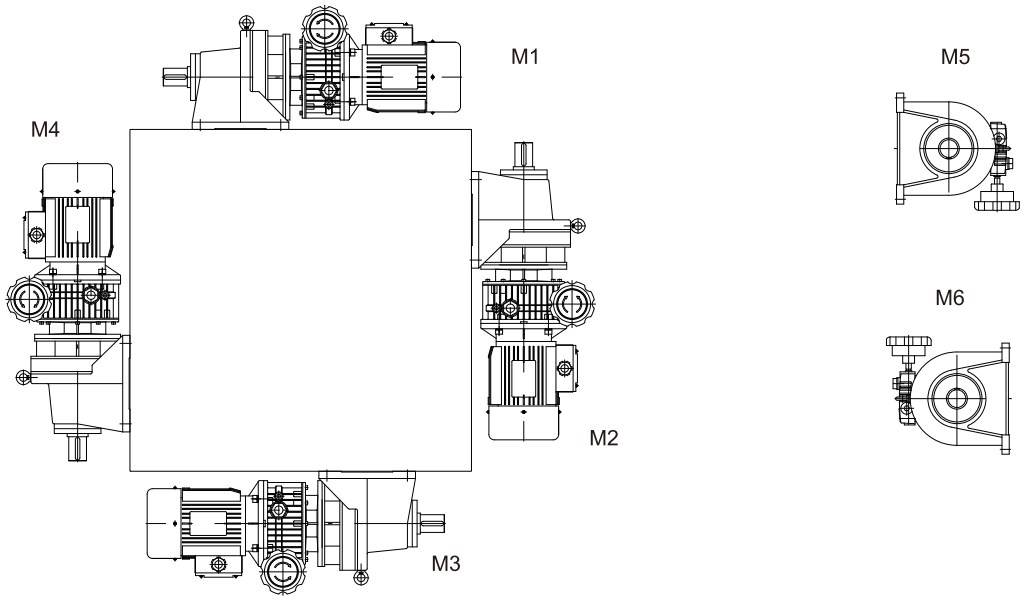

MB无级与WMRV系列组合安装方式 Mounting position of MB variator and WMRV series reducer

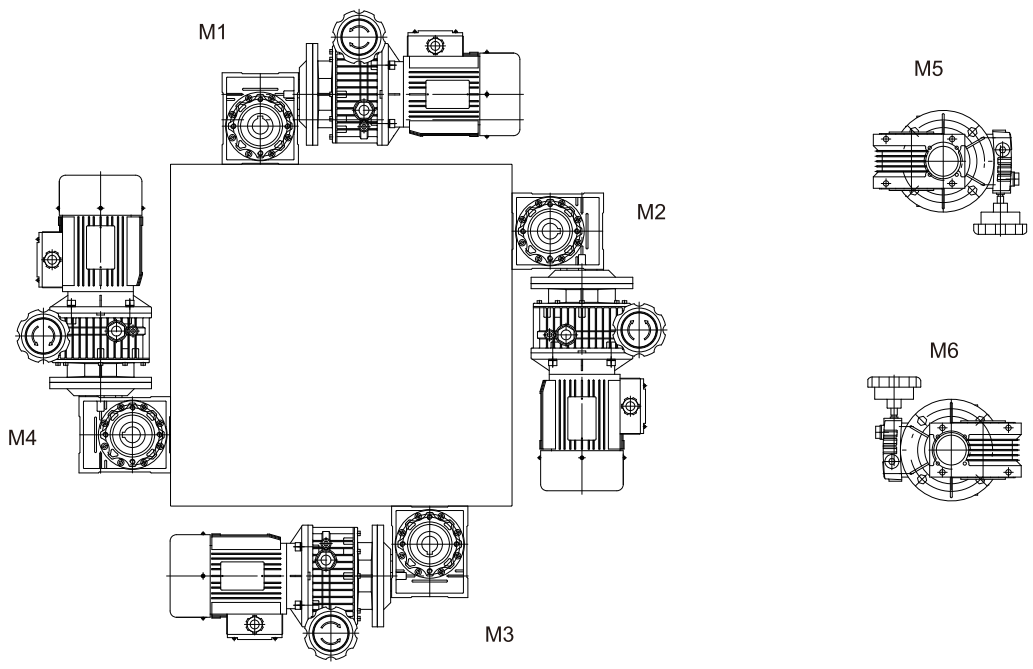

MB无级与WR系列组合安装方式 Mounting position of MB variator and WR series reducer

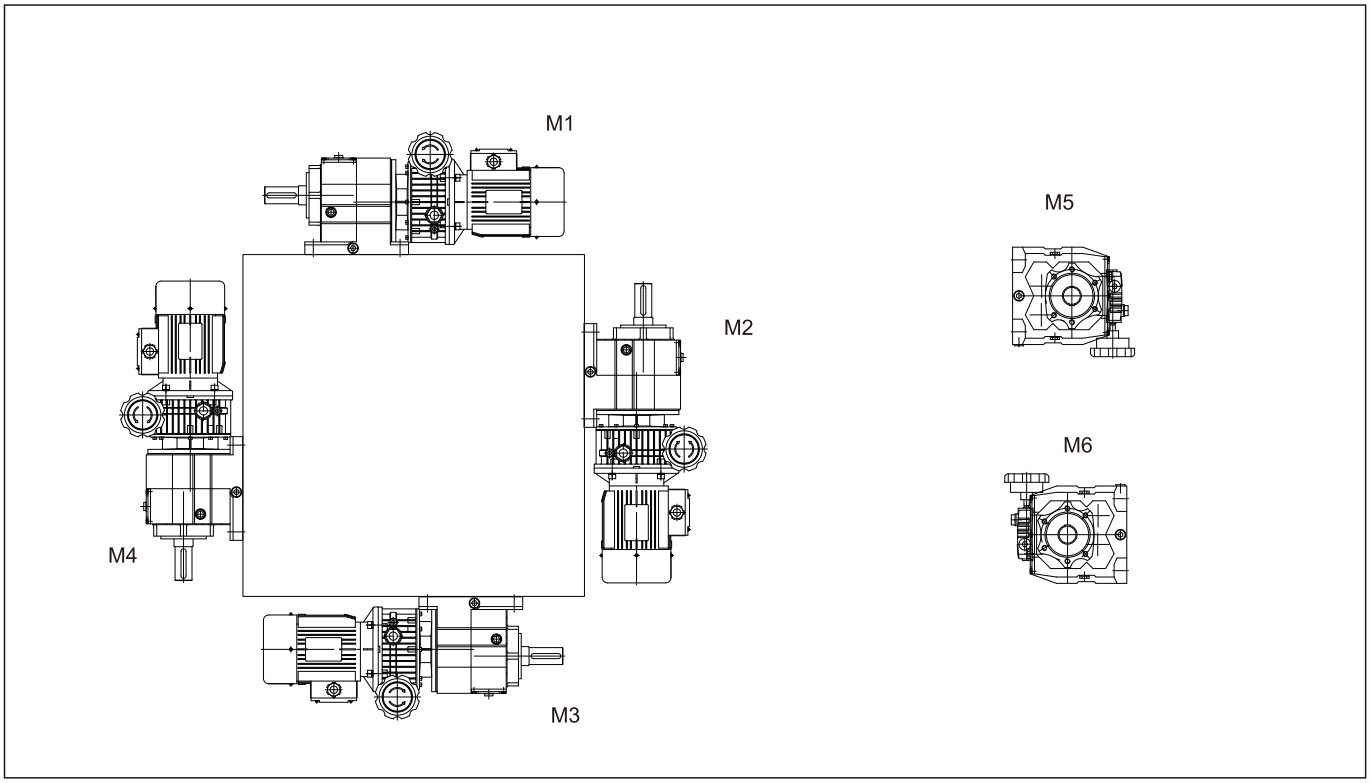

MB无级与WK系列组合安装方式 Mounting position of MB variator and WK series reducer

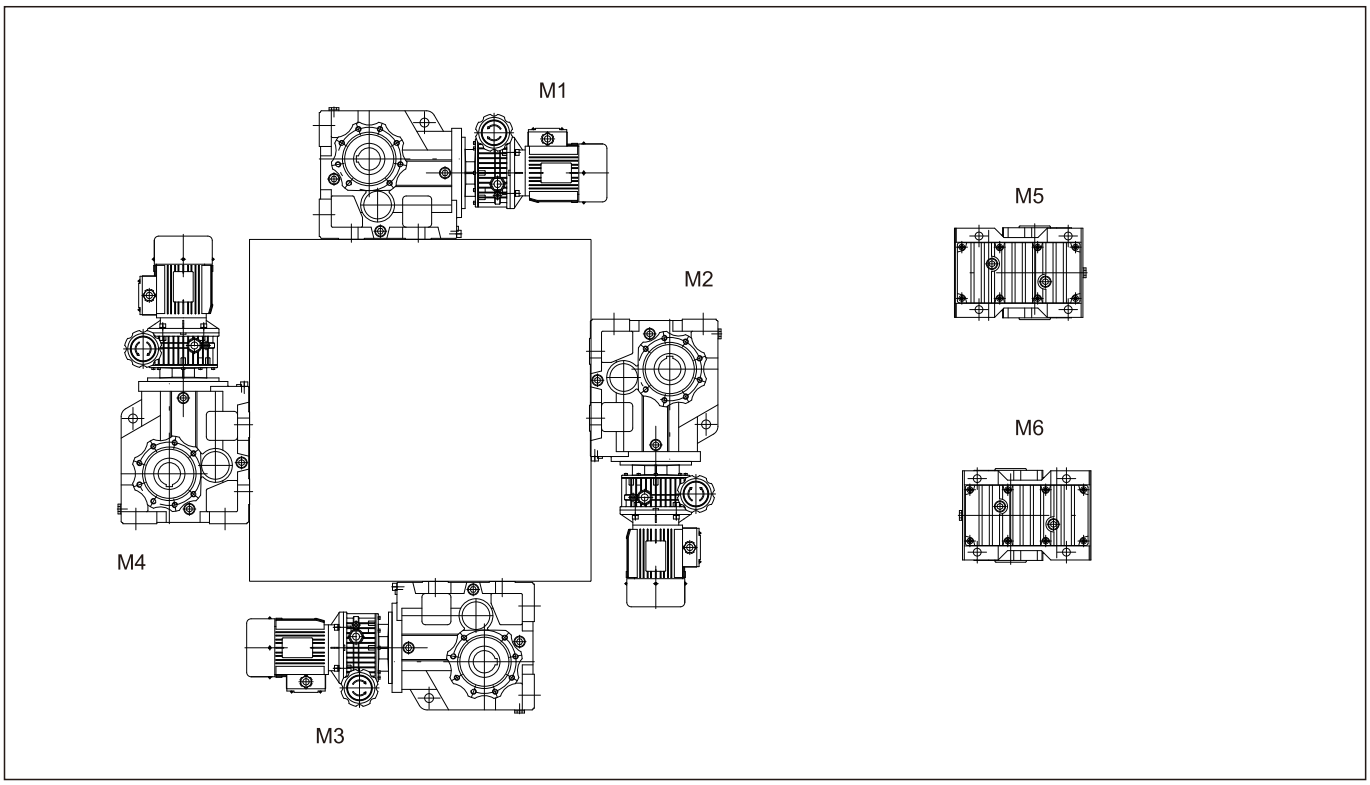

MB无级与WF系列组合安装方式 Mounting position of MB variator and WF series reducer

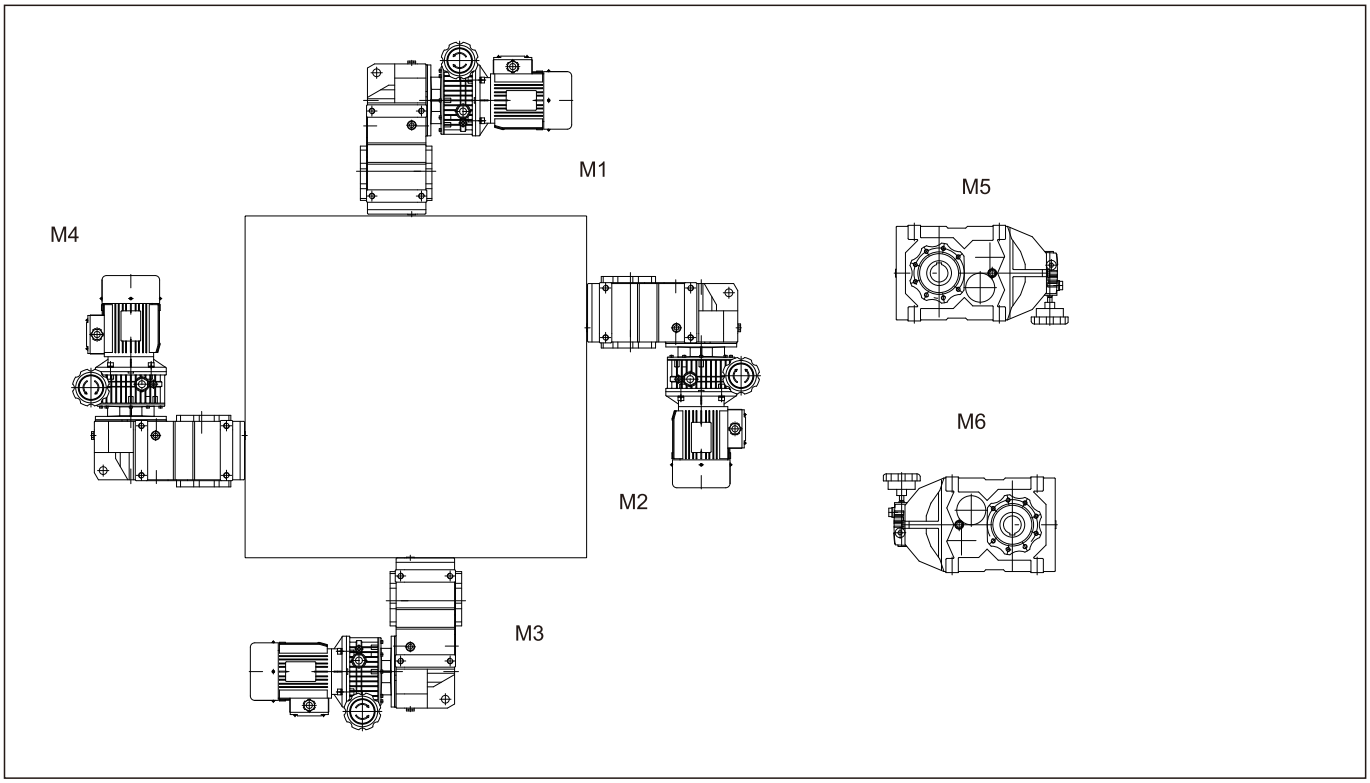

MB无级与WS系列组合安装方式 Mounting position of MB variator and WS series reducer

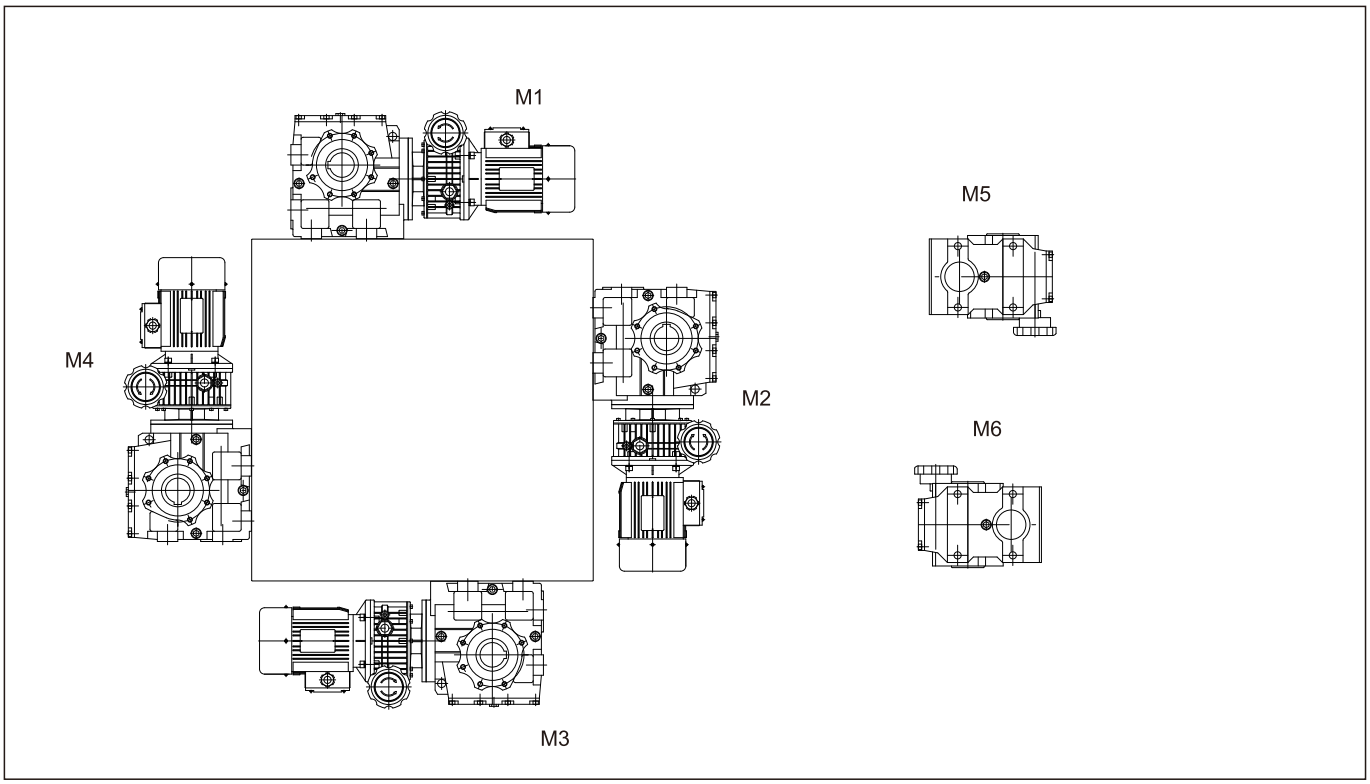

技术参数及选型范围
Techmical data and model selection range

变速机型号MB、MBN Variator model MB、MBN			02	04	07		15		22	40		55	75
额定输入功率(KW) Rated input power(KW)			0.18	0.37	0.55	0.75	1.1	1.5	2.2	3	4	5.5	7.5
输入转数 r/min Input speed r/min			1500r/min										
变速机及其组合型 Variator and combined type	传动比 Transmission ratio	变速范围 (r/min) Range of speed variation	许用输出扭矩 (N.m) Allowed output torque										
基本型 the basic type		200~1000	3~1.5	6~3	10~5	12~6	18~9	24~12	36~18	48~24	64~32	90~45	118~59
变速机 带一级齿轮减速 Variator with single stage gear deceleration	2.5	80~400	7.4~3.5	15~7.3	20~9.8	29~15	39~20	59~29	88~44	118~59	157~78	216~108	294~147
	3.3	60~300	10~4.7	20~9.5	32~15.5	38~19	58~28	78~36	118~56	158~79	212~106	298~149	398~199
	5	40~200	15~7	30~15	45~22	60~30	88~43	118~59	176~88	235~118	314~157	441~220	558~279
变速机 带二级齿轮减速 Variator with Double stage gear deceleration	8	25~125	20~10	40~20	68~34	80~40	120~60	160~80	243~122	324~162	432~216	605~302	795~398
	11	18~90	28~14	56~28	90~45	108~54	160~80	218~108	324~162	432~216	576~288	810~405	1060~530
	13.3	15~75	34~17	68~34	112~56	136~68	200~100	270~135	408~203	540~270	720~360	1012~506	1325~662
	16.6	12~60	42~21	84~42	140~70	168~84	250~125	334~167	502~251	670~335	892~446	1256~628	1643~822
	20	10~50	50~25	106~53	140~70	140~96	285~142	388~194	602~302	824~412	1110~550	1512~756	2062~1031
配X2摆线减速机 Equipped with X2cycloidal reducer	11	18~90	31~16	65~32	98~44	132~66	150~96						
	17	12~58	49~25	98~49	147~74	150~98	150~						
	23	8~43	65~32	137~67	150~98	150~137							
	29	7~34	83~41	150~84	150~126								
	35	6~28	98~49	150~103									
	43	4.5~23	118~59	150~125									
配X3摆线减速机 Equipped with X3cycloidal reducer	11						196~98	250~130					
	17	12~58	51~25	102~51		196~98	250~147	250~200					
	23	8~43	69~34	138~69	170~58	250~137	250~196						
	29	7~34	87~43	176~84	196~98	250~172							
	35	6~28	105~52	206~103	250~125	250~206							
	43	4.5~23	129~64	250~125	250~125								
	59	3.5~17	177~88	250~167	250~186								
	71	2.8~14	213~106	250~206	250~								
配X4摆线减速机 Equipped with X4cycloidal reducer	11	18~90											
	17	12~58											
	23	8~43				276~138	392~196	420~272					
	29	7~34				352~172	420~253	420~343					
	35	6~28				412~206	420~304	420~					
	43	4.5~23			340~152	420~250	420~372	420~					
	59	3.5~17		333~167	372~186	420~343	420						
	71	2.8~14	213~106	412~206	420~253	420~							
	87	2.3~11.5	261~130	420~261	420~304								
					420~								

技术参数及选型范围
Techmical data and model selection range

变速机型号MB、MBN Variator model MB、MBN			02	04	07		15		22	40		55	75
额定输入功率(KW) Rated input power(KW)			0.18	0.37	0.55	0.75	1.1	1.5	2.2	3	4	5.5	7.5
输入转数 r/min Input speed r/min			1500r/min										
变速机及其组合型 Variator and combined type	传动比 Transmission ratio	变速范围 (r/min) Range of speed variation	许用输出扭矩 (N.m) Allowed output torque										
配X5摆线减速机 Equipped with X5 cycloidal reducer	11	18~90								529~260	686~343	960~475	1150~652
	17	12~58							588~294	804~402	1078~539	1150~740	1150~1010
	23	8~43						549~274	804~400	1098~544	1150~725	1150~1000	
	29	7~34					510~253	686~343	1010~505	1150~686	1150~921		
	35	6~28					608~304	833~416	1150~613	1150~838	1150~1112		
	43	4.5~23				510~255	745~372	1019~510	1150~745	1150~1019			
	59	3.5~17			506~253	686~343	1009~504	1150~686	1150				
	71	2.8~14			608~304	833~417	1150~613	1150~838					
	87	2.3~11.5			745~372	1019~510	1150~745	1150~					
配X6摆线减速机 Equipped with X6 cycloidal reducer	11	18~90											1300~650
	17	12~58										1490~745	202~1010
	23	8~43									1450~725	2200~1000	2200~1362
	29	7~34								1372~686	1842~725	2200~1117	2200~1725
	35	6~28							1225~613	1676~838	2200~1117	2200~1534	2200~2029
	43	4.5~23							1490~745	2038~1019	2200~1352	2200~1862	
	59	3.5~17						1421~686	2019~1009	2200~1372	2200~1838		
	71	2.8~14					1225~613	1676~838	2200~1230	2200~1676			
	87	2.3~11.5					1490~745	2038~1019	2200~1495	2200~2038			
配X8摆线减速机 Equipped with X8 cycloidal reducer	23	8~43											2724~1362
	29	7~34										2528~1264	3450~1725
	35	6~28									2750~1352	3070~1534	4185~2029
	43	4.5~23								2744~1372	3675~1837	3724~1862	4600~2548
	59	3.5~17							2460~1230	3352~1676	4496~2234	4600~2582	4600~3450
	71	2.8~14							2989~1495	4077~2038	4600~2720	4600~3027	4300~4190
	87	2.3~11.5										4600~3744	4600~
配X9摆线减速机 Equipped with X9 cycloidal reducer	43	4.5~23											5096~2548
	59	3.5~17										5057~2528	6899~3449
	71	2.8~14										6145~3072	7100~4190
	87	2.3~11.5									5439~2720	7100~3744	7100~5096
配X10摆线减速机 Equipped with X10 cycloidal reducer	71	2.8~14											8379~4390
	87	2.3~11.5										7100~3714	10192~5096

技术参数及选型范围
Techmical data and model selection range

变速机型号MB、MBN Variator model MB、MBN			02	04	07		15		22	40		55	75
额定输入功率（KW） Rated input power(KW)			0.18	0.37	0.55	0.75	1.1	1.5	2.2	3	4	5.5	7.5
输入转数 r/min Input speed r/min			1500r/min										
变速机及其组合型 Variator and combined type	传动比 Transmission ratio	变速范围 (r/min) Range of speed variation	许用输出扭矩 (N.m) Allowed output torque										
配X32摆线减速机 Equipped with X32 cycloidal reducer	121	1．6-8		250									
	187	1-5		250									
	289	0.7-3.5		250									
配X42摆线减速机 Equipped with X42cycloidal reducer	121	1.6-8		500-300	500-447								
	187	1-5		500-480	500								
	289	0.7-3.5		500	500								
	319	0.6-3		500									
配X53摆线减速机 Equipped with X53 cycloidal reducer	121	1.6-8		600-300	897-447	1000-610	1000-890	1000					
	187	1-5		960-480	1000-715	1000-975	1000						
	289	0.7-3.5		1000-687	1000	1000							
	319	0.6-3		1000-800									
	473	0.42-2.1		1000									
配X63摆线减速机 Equipped with X63 cycloidal reducer	121	1.6-8			894-447	1220-610	1780-890	2000-1220					
	187	1-5			1430-715	1950-975	2000-1430	2000-1950					
	289	0.7-3.5			2000-1020	2000-1400	2000	2000					
	319	0.6-3			2000-1190	2000-1920							
	473	0.42-2.1			2000-1700	2000							
	595	0.34-1.68			2000								
配X84摆线减速机 Equipped with X84 cycloidal reducer	121	1.6-8					1780-890	2440-1220	3580-1790	4500-2440			
	187	1-5					2860-1430	3900-1950	4500-2860	4500-3900			
	289	0.7-3.5					4080-2040	4500-2780	4500-4080	4500			
	319	0.6-3					4500-2380	4500-3250	4500				
	473	0.42-2.1			3400-1700		4500-3400	4500					
	595	0.34-1.68			4260-2130	4500-2320	4500-4250						
	731	0.27-1.37			4500-2610	4500-2900	4500						
	841	0.24-1.18			4500-3030	4500-3555							
	1003	0.2-1			4500-3570	4500-4130							
	1505	0.13-0.66			4500								
配X85摆线减速机 Equipped with X85 cycloidal reducer	121	1.6-8							3580-1790	4500-2440	4500-3250	4500-4470	
	187	1-5					2860-1430	3900-1950	4500-2860	4500-3900	4500		
	289	0.7-3.5					4080-2040	4500-2785	4500-4080	4500			
	319	0.6-3					4500-2380	4500-3250	4500				
	391	0.51-2.55					4500-2680	4500-3820					
	595	0.34-1.68			4260-2130	4500-2900	4500-3280	4500					
	731	0.27-1.37			4500-2610	4500-3655	4500						
	841	0.24-1.18			4500-3030	4500-4130							
	1003	0.2-1			4500-3570								
	1505	0.13-0.66			4500								

技术参数及选型范围
Techmical data and model selection range

变速机型号MB、MBN Variator model MB、MBN			02	04	07		15		22	40		55	75
额定输入功率（KW) Rated input power(KW)			0.18	0.37	0.55	0.75	1.1	1.5	2.2	3	4	5.5	7.5
输入转数 r/min Input speed r/min			1500r/min										
变速机及其组合型 Variator and combined type	传动比 Transmission ratio	变速范围 (r/min) Range of speed variation	许用输出扭矩(N.m) Allowed output torque										
配X95摆线减速机 Equipped with X95 cycloidal reducer	121	1.6~8							3580~1790	4800~2440	6500~3250	8940~4470	9000~6100
	187	1~5							5720~2860	7800~3900	9000~5200	9000~7150	
	289	0.7~.35					4080~2040	5570~2785	8160~4080	9000~5570	9000~7425	9000	
	319	0.6~3					4760~2380	6500~3250	9000~4760	9000~6500	9000~8660		
	473	0.42~2.1					6800~3400	9000~4640	9000~6806	9000	9000		
	595	0.34~1.68					8500~4250	9000~5800	9000~8510				
	731	0.27~1.37					9000~5220	9000~7100	9000				
	841	0.24~1.18			6060~3030	8260~4130	9000~6060	9000~8260					
	1003	0.2~1			7140~3570	9000~4870	9000~7150	9000					
	1505	0.13~0.66			9000~5415	9000~7380	9000						
配X106摆线减速机 Equipped with X106 cycloidal reducer	121	1.6~8										8970~4470	12000~6100
	187	1~5							5720~2860	7800~3900	10400~5200	12000~7150	12000~9750
	289	0.7~3.5							8160~4080	11140~5570	12000~7425	12000~10210	12000
	319	0.6~3							9520~4760	12000~6500	12000~8660	12000	
	473	0.42~2.1							12000~6806	12000~9280	12000		
	595	0.34~1.68					8500~4250	1160~5800	12000~8510	12000			
	731	0.27~1.37					10440~5220	12000~7110	12000~10435				
	841	0.24~1.18					12000~6060	12000~8260	12000				
	1003	0.2~1					12000~7050	12000~9745					
	1501	0.13~0.66			10830~5415	12000~7380	12000	12000					

国内外各型无级变速机对照表
Comparative table of variators model domestically

本公司 This company	MBN02	MBN04	MBN07					
				MB 15	MB 22	MB 40	MB 55	MB 75
日本 Japan	D002	D004	D007	D015	D022	D037	D055	D075
德国 Germany	02	03	04	05	06	07	08	08
意大利 Italy	TK/02	TK/05	TK/10	TK/20	TK/30	TK/40	TK/100	TK/100
其他 Others	JWB-X0.25	JWB-X0.37	JWB-X0.75	JWB-X1.5	JWB-X2.2	JWB-X4	JWB-X5.5	JWB-X7.5
	UD003	UD004	UD007	UD015				

国内各型无级摆线减速机对照表
Comparative table of various cycloidal reducer model domestically

天津 Tianjin	X2	X3	X4	X5	X6	X7	X8	X9	X10
江门 Jiangmen	XJ0	XJ1	XJ2	XJ3	XJ4		XJ5	XJ6	
化工部 Ministry of Chemical Industry	B1	B1	B2	B3	B4		B5	B5	
机械部 Ministry of Machine-Building Industry	B15	B15	B18	B22	B27		B33	B39	B45

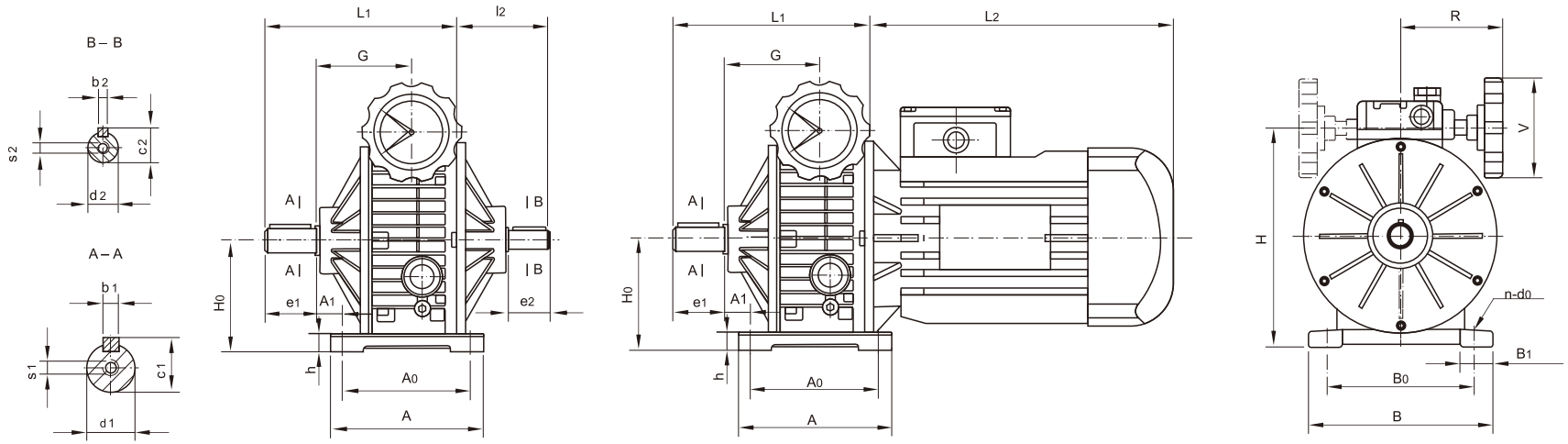

MBN系列基本型甲板卧式外形及安装尺寸
Overall and installation dimensions of horizontal installation in MBN basic series

机座号 Frame-size	中心高 Central height	安装尺寸 Installation dimension					输出轴 Output shaft					输入轴 Lnput shat						外形尺寸 Overall dimensions									
	H0	A0	A1	B0	n	d0	d1	b1	c1	e1	s1	d2	b2	c2	e2	l2	s2	A	h	G	B	B1	H	R	V	L1	L2
02	75	105	13.5	110	4	9	11js6	4	12.5	23	M6	11js6	4	12.5	23	74	M6	125	13	66	145	25	147	110	85	135	227
04	90		20	120		9	14js6	5	16	30		14js6	5	16	30	79		125	15	73	150	27	179	110		140	245
07	106	125	28	160		10	19js6	6	21.5	40	M6	19js6	6	21.5	40	110	M6	150	13	84.5	190	28	213	115	110	178.5	250

02、04、07可供铝合金箱体
02、04、07 available Al-alloy box

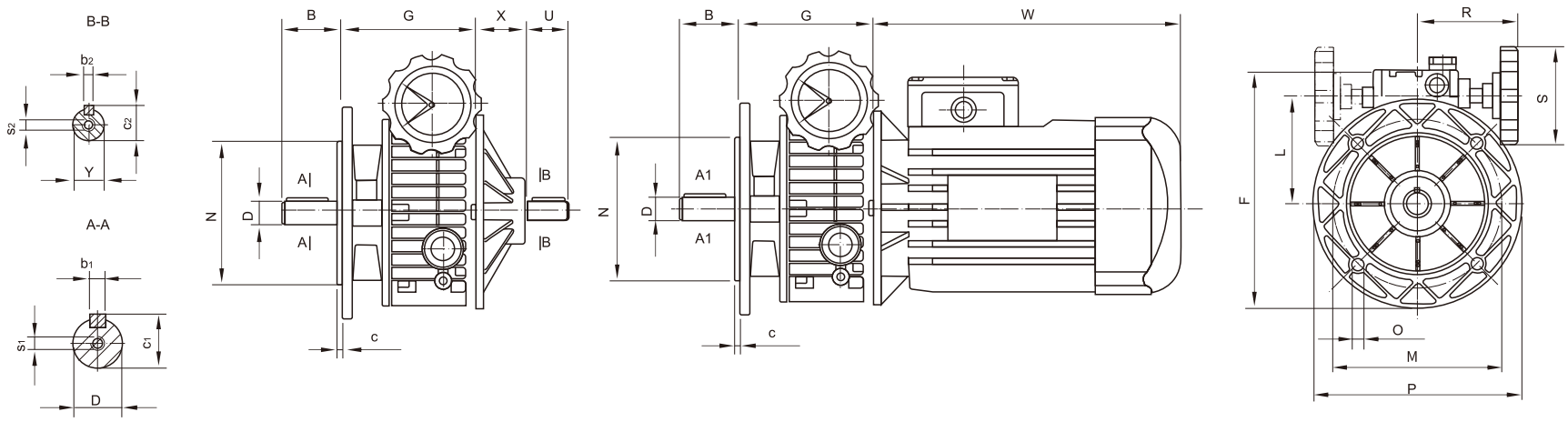

MBN系列基本型法兰立式安装尺寸
Overall and installation dimensions of vertical installation in MBN basic series

机座号 Frame size	外形及安装尺寸 Overall and installation dimensions																					
	B	C	D (js6)	F	G	Y (js6)	L	M	N	O	P	R	S	U	x	w	b1	c1	s1	b2	c2	s2
02	23	3.5	11	181	112.5	11	77	115	95	9	140	110	85	23	51	227	4	12.5	M6	4	12.5	M6
04	30		14	203	110	14	89	130	110	9	160	110	85	30	49	245	5	16	M6	5	16	M6
07	40		19	240	139	19	107	165	130	11	200	115	110	40	70	250	6	21.5	M6	6	21.5	M6

02、04、07可供铝合金箱体
02、04、07 available Al-alloy box

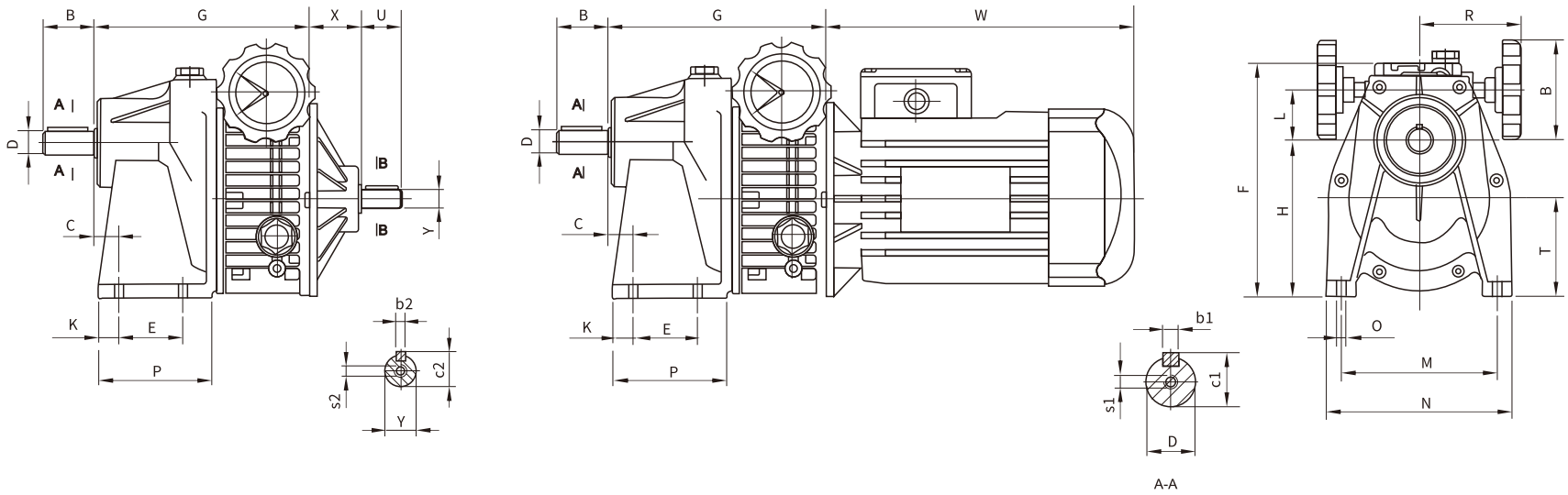

MBN系列-C单级卧式齿轮减速机组合外形及安装尺寸

Overall and installation dimensions of horizontal combination to MBN-C combines single-stage gear reducer

机座号 Frame size	外形及安装尺寸 Overall and installation dimensions																								
	B	C	D (js6)	E	F	G	H	Y (js6)	L	M	N	O	P	R	S	T	U	X	W	K	b1	c1	s1	b2	c2	s2
02-C	40	18	19	45	167	180	108	11	35	105	130	9	80	110	85	66	23	51	227	16	6	21.5	M6	4	12.5	M6
04-C	50	6	24	70	193	188	130	14	39	150	190	10.5	105	110	85	79	30	49	245	15	8	27	M8	5	16	M6
07-C	60	7	28	70	228	225	160	19	45	165	210	12	130	115	110	99	40	70	250	25	8	31	M8	6	21.5	M6

02、04、07可供铝合金箱体

02、04、07 available Al-alloy box

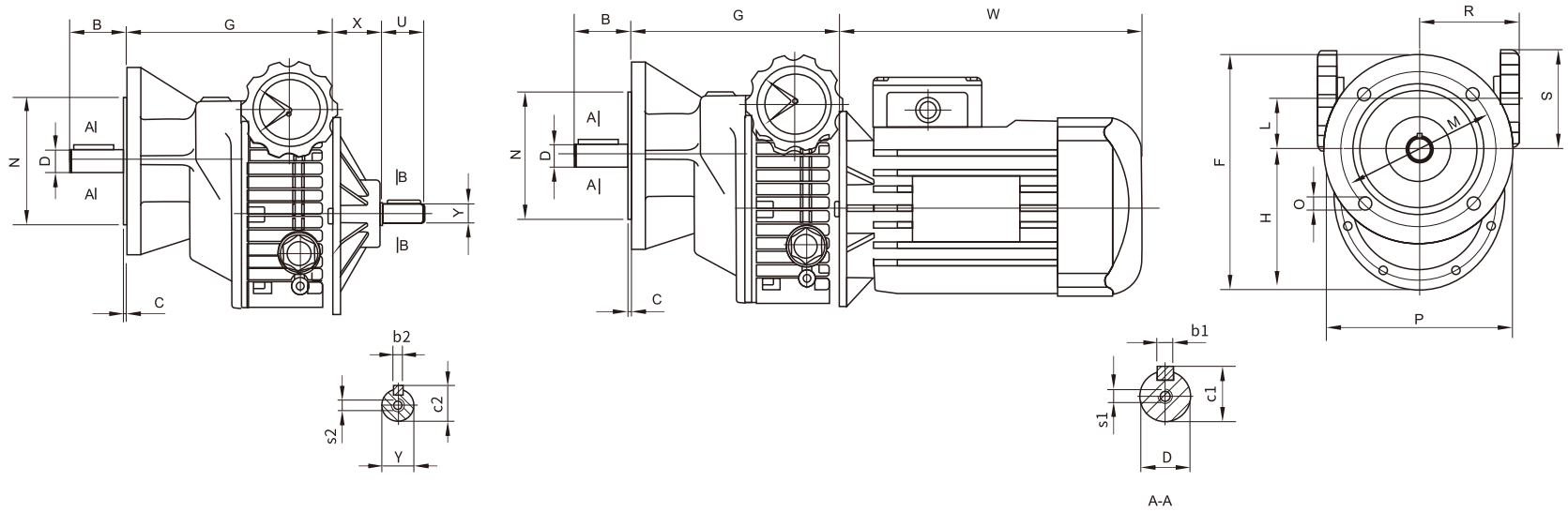

MBN系列-C单级立式齿轮减速机组合外形及安装尺寸

Overall and installation dimensions of vertical combination to MBN-C combines single-stage gear reducer

机座号 Frame size	外形及安装尺寸 Overall and installation dimensions																						
	B	C	D (js6)	F	G	H	Y (js6)	L	M	N	O	P	R	S	U	X	W	b1	c1	s1	b2	c2	s2
02-C	40	3	19	182	180	112	11	35	115	95	9	140	110	85	23	51	227	6	21.5	M6	4	12.5	M6
04-C	50	4	24	211	188	131	14	39	130	110	10.5	160	110	85	30	49	245	8	27	M8	5	16	M6
07-C	60	4	28	261	225	161	19	45	165	130	13	200	115	110	40	70	250	8	31	M8	6	21.5	M6

02、04、07可供铝合金箱体

02、04、07 available Al-alloy box

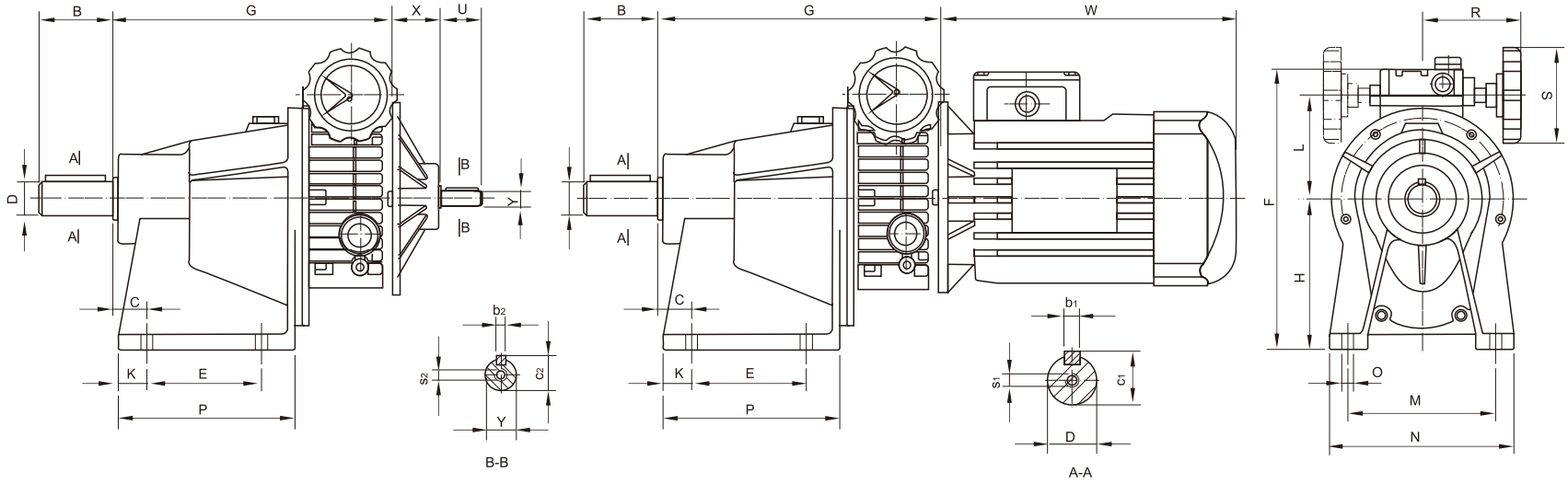

MB、MBN系列-2C二级卧式齿轮减速机组合外形及安装尺寸

Overall and installation dimensionsof horizontal combination to MB,MBN-2C combines double-stage gear reducer

机座号 Frame size	外形及安装尺寸 Overall and installation dimensions																								
	B	C	D (js6)	E	F	G	H	Y (js6)	L	M	N	O	P	R	S	U	X	W	K	b1	c1	s1	b2	c2	s2
MBN02-2C	40	27	19	70	206	226	105	11	77	105	130	9	120	110	85	23	51	227	21	6	21.5	M6	4	12.5	M6
MBN04-2C	55	25	28	85	224	239	110	14	90	150	190	10.5	140	110	85	30	49	245	19	8	31	M8	5	16	M6
MBN07-2C	65	26	32	106	281	276	152	19	106	174	212	13	161	115	110	40	70	250	23	10	35	M10	6	21.5	M6
MB15-2C	70	27	38	130		332	172	24	121	200	250	14	185	135	110	40	51	285	25	10	41	M10	8	27	M8
MB22-2C	110	43	55	180		447	235	24	150	250	320	18	266	166	110	50	69	320	34	16	59	M12	8	31	M8
MB40-2C	110	43	55	180		447	235	24	150	250	320	18	266	166	110	50	69	340	34	16	59	M12	8	31	M8
MB55-2C	140	48	70	250		565	280	38	192	300	380	21	344	182	110	60	49	395	38	20	74.5	M16	10	41	M10
MB75-2C	140	48	70	250		565	280	38	192	300	380	21	344	182	110	60	49	435	38	20	74.5	M16	10	41	M10

02、04、07可供铝合金箱体

02、04、07 available Al-alloy box

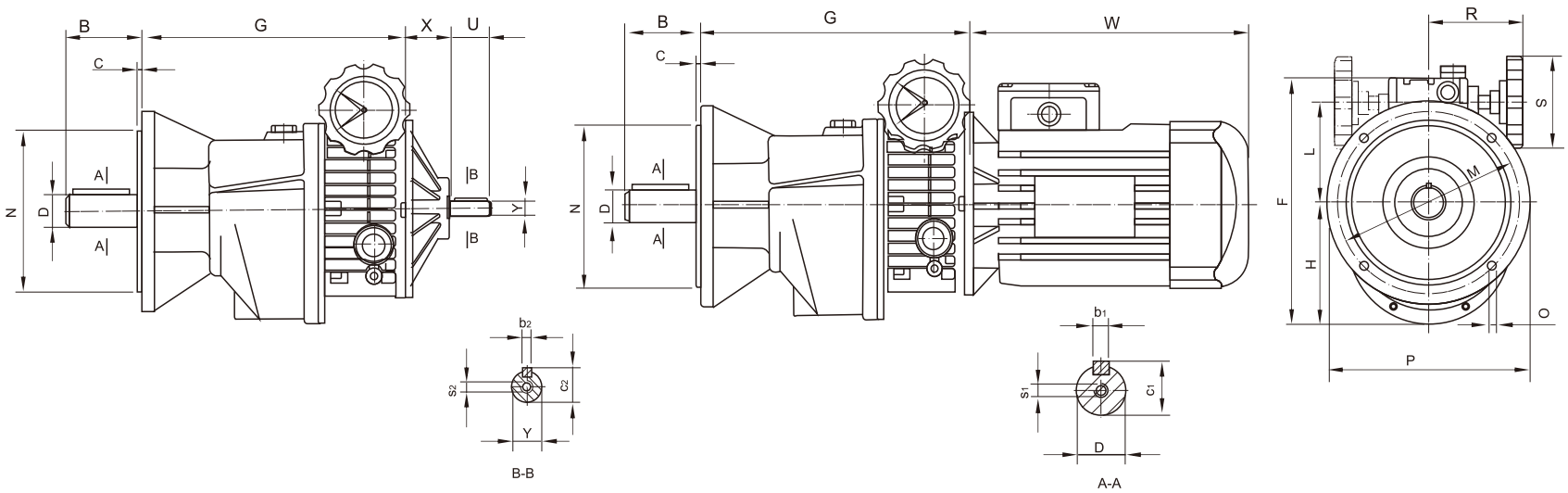

MB、MBN系列-2C二级立式齿轮减速机组合外形及安装尺寸

Overall and installation dimensionsof horizontal combination to MB,MBN-2C combines double-stage gear reducer

机座号 Frame size	外形及安装尺寸 Overall and installation dimensions																				
	B	C	D (js6)	G	Y (js6)	L	M	N	O	P	R	S	U	X	W	b1	c1	s1	b2	c2	s2
MBN02-2C	40	3	19	226	11	77	115	95	9	140	110	85	23	51	227	6	21.5	M6	4	12.5	M6
MBN04-2C	55	4	28	239	14	90	130	110	10.5	160	110	85	30	49	245	8	31	M8	5	16	M6
MBN07-2C	65	4	32		19	106	165	130	12.5	200	115	110	40	70	250	10	35	M10	6	21.5	M6
MB15-2C	70	5	38		24	121	215	180	14.5	250	135	110	40	51	285	10	41	M10	8	27	M8
MB22-2C	110	5	55		24	151	265	230	14.5	300	166	110	50	69	320	16	59	M12	8	31	M8
MB40-2C	110	5	55		24	151	265	230	14.5	300	166	110	50	69	340	16	59	M12	8	31	M8
MB55-2C	140	5	70		38	192	300	250	18	350	182	110	60	49	395	20	74.5	M16	10	41	M10
MB75-2C	140	5	70		38	192	300	250	18	350	182	110	60	49	435	20	74.5	M16	10	41	M10

02、04、07可供铝合金箱体

02、04、07 available Al-alloy box

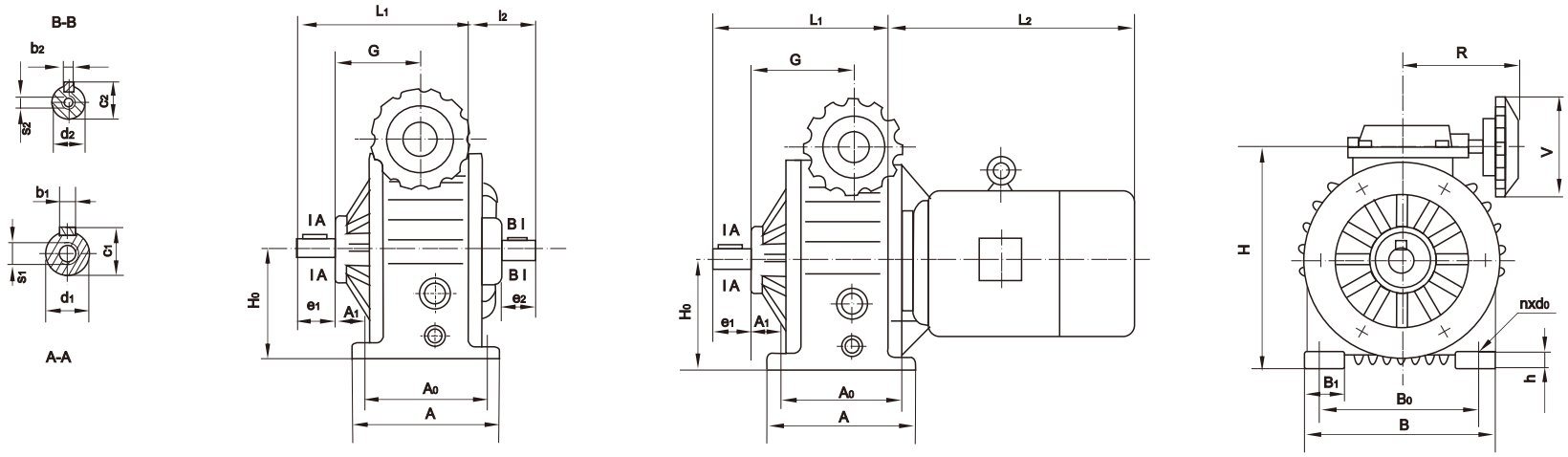

MB 系列基本型甲板卧式外形及安装尺寸
Overall and installation dimensions of horizontal installation to MB basic series

机座号 Frame Size	中心高 Central height	安装尺寸 Installation dimensions					输出轴 Output shaft					输入轴 Input shaft						外形尺寸 Overall dimensions									
	H0	A0	A1	B0	n	d0	d1	b1	c1	e1	s1	d2	b2	c2	e2	l2	s2	A	h	G	B	B1	H	R	V	L1	L2
15	125	140	50	180	4	12	25js6	8	28	50	M8	24js6	8	27	40	91	M8	165	18	107	230	50	246	135	110	223	285
22	150	230	25	245		14	30js6		33	60					50	119		270	25	131	300	55	300	168		268	320
40																											340
55	200	250	33	315		18	35js6	10	38	70	M10	32js6	10	35	60	109	M10	290	30	131	365	70	392	194		319	395
75																											435

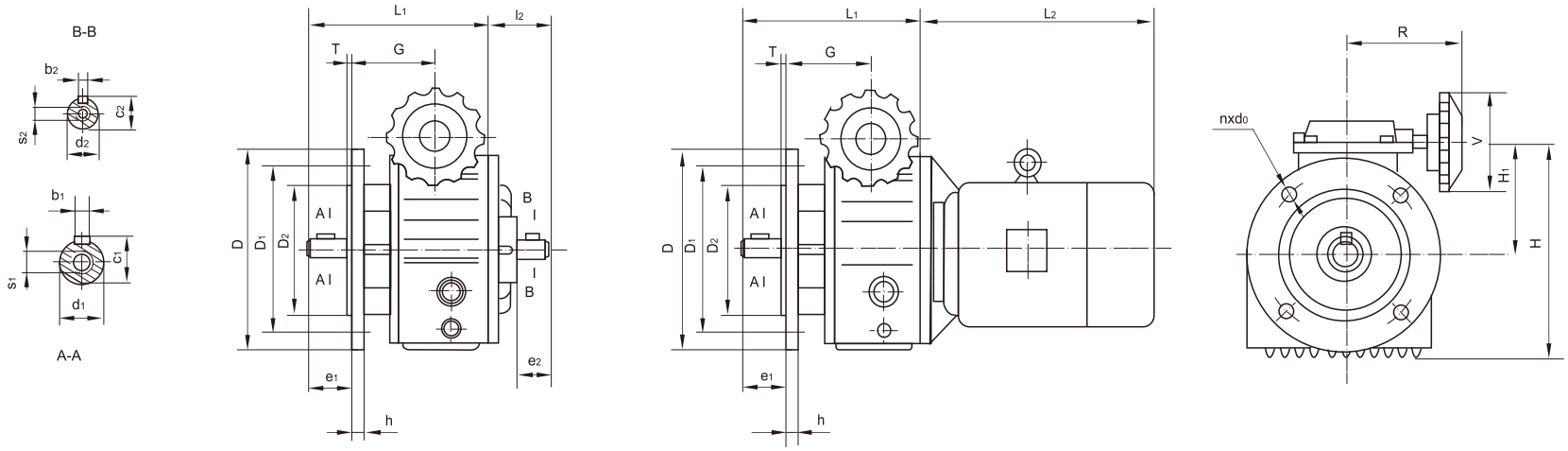

MB 系列基本型法兰式外形及安装尺寸

Overall and installation dimensions of vertical installation to MB basic series

机座号 Frame Size	安装尺寸 Installation dimensions					输出轴 Output shaft					输入轴 Input shaft						外形尺寸 Overall dimensions								
	D1	D2	T	n	d0	d1	b1	c1	e1	s1	d2	b2	c2	e2	l2	s2	D	h	G	H	H1	R	V	L1	L2
15	165	130	3	4	12	25js6	8	28	50	M8	24js6	8	27	50	91	M8	200	11	107	233	121	135	110	216	Depending on Motor Size
22	215	180	4		15	30js6		33	60					60	119		250	13	131	285	150			279	
40																									
55	265	230	5			38js6	10	41	70	M10	32js6	10	35		108	M10	300	12		380	192	172	122	329	
75																									

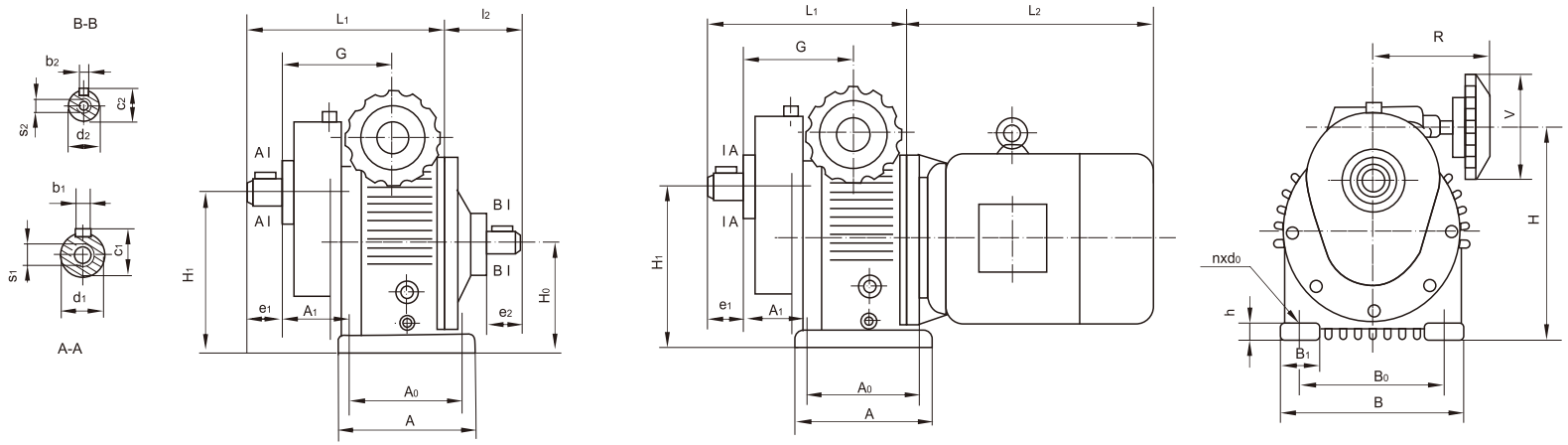

MB 系列一级齿轮型甲板卧式外形及安装尺寸

Overall and installation dimensions of horizontal combination to MB combines single-stage gear reducer

机座号 Frame Size	中心高 Central height		安装尺寸 Installation dimensions					输出轴 Output shaft					输入轴 Input shaft						外形尺寸 Overall dimensions									
	H0	H1	A0	A1	B0	n	d0	d1	b1	c1	e1	s1	d2	b2	c2	e2	l2	s2	A	h	G	B	B1	H	R	V	L1	L2
15	125	190	140	78	180	4	12	30js6	8	33	45	M8	24js6	8	27	40	91	M8	165	18	133	230	50	246	135	110	245	285
22	150	230	230	63	245		14	40k6	12	43	60	M10				50	119		270	25	170	300	55	300	168		306	320
40																												340
55	200	320	250	157	315		18	50k6	14	53.5	82		32js6	10	35	60	109	M10	290	30	255	365	70	392	194		455	395
75																												435

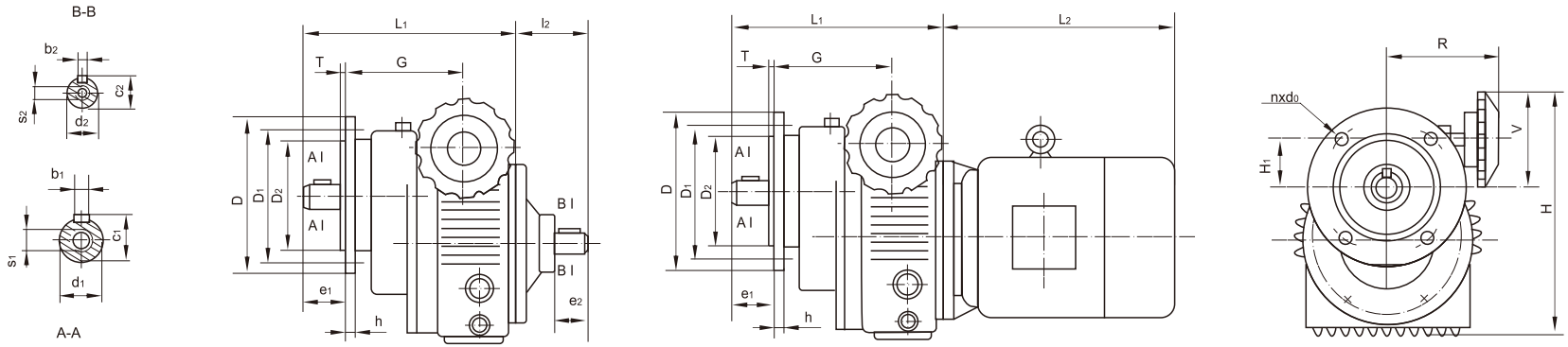

MB 系列带一级齿轮型法兰式外形及安装尺寸

Overall and installation dimensions of vertical combination to MB combines single-stage gear reducer

机座号 Frame Size	安装尺寸 Installation dimensions					输出轴 Output shaft					输入轴 Input shaft						外形尺寸 Overall dimensions								
	D1	D2	T	n	d0	d1	b1	c1	e1	s1	d2	b2	c2	e2	l2	s2	D	h	G	H	H1	R	V	L1	L2
15	165	130	4	4	15	30js6	8	33	45	M8	24js6	8	27	40	91	M8	200	16	155	246	56	135	110	266	285
22	215	180				40js6	12	43	60	M10				50	119		250		200	300	70	166		337	320
40																									340
55	265	230	5			50js6	14	53.5	82		32js6	10	35	60	109	M10	300	20	255	392	72	194		455	395
75																									435

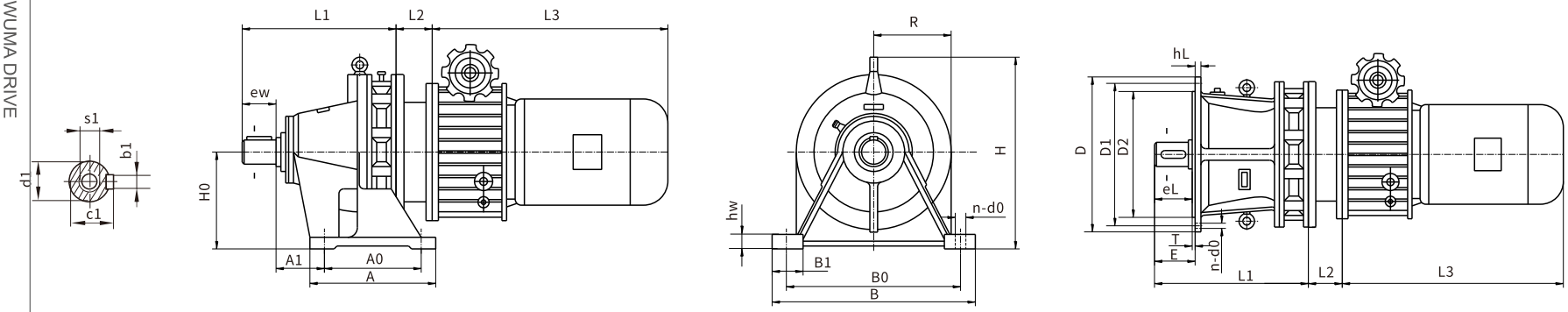

MB/MBN无级变速机配单级摆线减速机外形及安装尺寸

Overall and installation dimensions of MB,MBN variators equipped with single-stage cycloidal reducer

机座号 Frame Size	中心高 Central height	安装尺寸 (W) Installation dimensions(W)					安装尺寸(L) Installation dimensions(L)						输出轴 Output shaft						外型尺寸 Overall dimensions									
	H0	A1	A0	B0	n	d0	D1	D2	E	T	n	d0	d1	b1	c1	ew	eL	s1	A	hw	h1	B	H	B1	D	L1	L2	L3
X2	100	66	90	180	4	12	160	130	42	3	6	12	25h6	8	28	35	35	M8	120	15	12	210	175	45	180	157	按所配无级变速机决定 Depends on the equipped continuously variable transmission		
X3	140	96	100	250		16	200	170	50	4			35h6	10	38	35	45		150	20	15	290	278	55	230	193			
X4	150	95	145	290			230	200	79	4			45h6	14	48.5	74	63	M10	195	22		330	309	65	260	240			
X5	160	115	150	370		18	310	270	92	4			55h6	16	59	91	79		260	25	20	410	356	75	340	311			
X6	200	36	275	380		22	360	316	92	5	8	16	65h6	18	69	89	80	M12	335	30	22	430	425		400	354			
X8	250	35	380	480			450	400	112	6	12	18	90h6	25	95	120	110	M16	440	35	30	530	529	120	490	447			
X9	290	44	480	560	6	26	520	455	170	8		22	100h6	28	106	142	129	M20	560	40	35	620	614		580	552			
X10	325	80	500	630		30	590	520	174	10			110h6		116	150	140	M24	600	45	40	690	706		650	612			

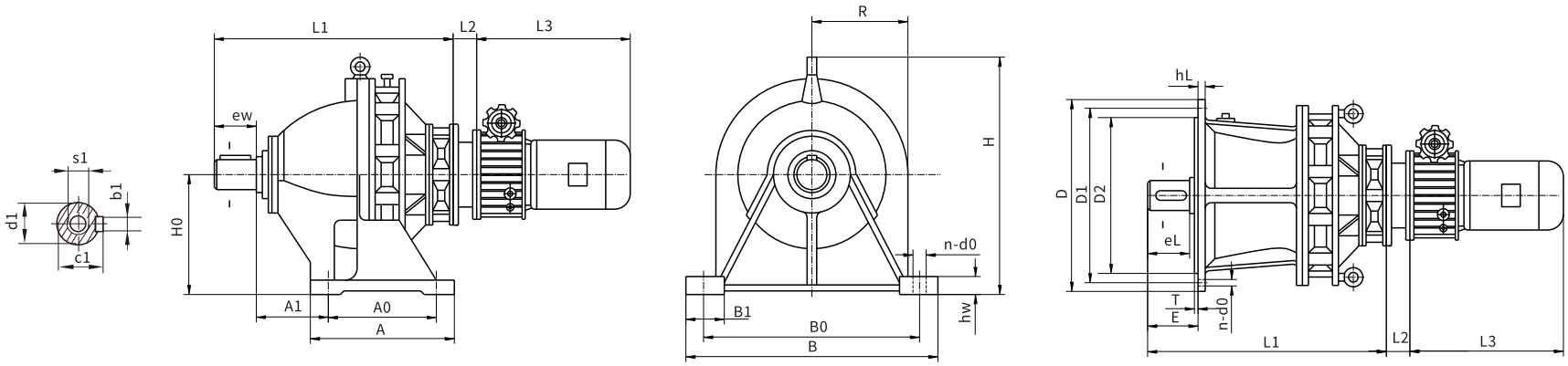

MB/MBN无级变速机配双级摆线减速机外形及安装尺寸

Overall and installation dimensions of MB,MBN variator equipped with double-stage cycloidal reducer

机座号 Frame Size	中心高 Central height	安装尺寸(W) Installation dimensions(W)					安装尺寸(L) Installation dimensions(L)						输出轴 Output shaft						外型尺寸 Overall dimensions									
	H0	A1	A0	B0	n	d0	D1	D2	E	T	n	d0	d1	b1	c1	ew	eL	s1	A	hw	hL	B	H	B1	D	L1	L2	L3
X32	140	96	100	250	4	16	200	170	50	4	6	12	35h6	10	38	55	45	M8	150	20	15	290	278	55	230		按所配无级变速机决定 Depends on the equipped continuously variable transmission		
X42	150	95	145	290			230	200	79				45h6	14	48.5	74	63	M10	195	22		330	309	65	260	318			
X53	160	115	150	370		18	310	270	92				55h6	16	59	91	79	M10	260	25	20	410	356	75	340	399			
X63	200	36	275	380		22	360	316	92	5			65h6	18	69	89	80	M12	335	30	22	430	425		400	442			
X84 X85	250	35	380	480		26	450	400	112	6	8	16	90h6	25	95	120	110	M16	440	35	30	530	529	120	490	560			
X95	290	44	480	560	6		520	455	170	8	12	18	100h6	28	106	142	129	M20	560	40	35	620	614		580	688			
X106	325	80	500	630		30	590	520	174	10		22	110h6		116	150	140	M24	600	45	40	690	706		650	760			

机型号、电机的选择及温升

1.准确选择机型核心的依据是使选用的电机---变速机组与预计要求的负载和成本相适应。在某种情况下,可能由于缺乏预见或者由于过载,而选取不够大的组件,引起故障和失败,反之选取过份功率大的传动系统,意味着消耗的资源增加,一旦被驱动工作机的功率和扭矩已经确定,下一个步骤就是估计载荷的性质,存在的惯性和冲击载荷,如果有的话,载荷类型(见表就好确定,因而可相应地选取机型号).

工作情况	K
均与负载,连续负载,经常旋转,无惯性	1
中等冲击负荷,脉动载荷,经常反转,中等惯性	1.3
中等冲击负荷,脉动载荷,经常反转,很大的惯性	1.5
严重的冲击负荷,脉动载荷,很大的惯性	1.75

十分合适的变速机是指能够承受很大的过载能力,如果变速机平稳的工作,并精确地与所需的负载相称。
尽管如此,也必须考虑到特殊的和不经常的工作情况。有了定载荷类型的参考表,驱动机械需要的功率应乘以所选定的工作情况系数K。

2.电动机：采用三相异步,全封闭,外部通风,笼式转子的标准电动机,外壳防护为IP54,即防尘,防溅(欧洲标准--与我国Y系列电机标准一样)。绝缘等级为B级。电机轴直接与变速机联接必需装有油封。起动频率,允许每分钟最高起动次数为5次,更高的起动频率对变速机的使用寿命有不利影响。

3.温升:变速机用四极电机时,此时,部件在跑合(空车运转)开始时,温升高于正常工作的温升,约高于环境温度40-45℃,当跑合运转60-80小时后,温升逐渐降低,此后,温度高于环境温20℃,并保持稳定的温升。变速机用二极电机时,跑合的持续时间和影响基本与四极电机一样。然而,在这种情况下,跑合时高的温升影响正常允许的工作条件,但对部件的使用寿命无有害影响。

Selection guide

1. The core base is the selection which must be fit for the load and cost to the combination. perhaps the load is unexpected or too big. it makes the combination damage another side, if the power of the combination is too big, it means wasting resources, if the power and torque are known, we should estimate the character of load, so choose the accurate safe factor" K" to the combination. Choose safe factor "K" accurately to count the combination power.

Working condition	K
Single,stable,continue,rotating and no intertia	1
Plusating, middle shock load, often reberse,middle intertia	1.3
Plusating, middle shock load,often reverse, hard intertia	1.5
Hard shock load, often reverse,hard intertia	1.75

Choose safe factor "K"accurately to count the combination power.

2.Electric motor: three-phase, asynchronous, protect grade Ip54, insulation grade B. Electric motor must be equipped with oil seal when it is connected directly with a variation. it starts less than five times every minute, or its life will be reduced.

3.The temperature will drop after 60-80 hours of running when variator equipped with a four-pole electric motor runs for the first time and it will remain stable. if variator is equipped with a two-pole electric motor, the temperature will drop after 80-100 hours running, later, it will remain stable, and this process is harmless to variator's life.

MB、MBN系列行星锥盘无极变速机
MB、MBN SERIES Planetaty cone-disk variator

结构示意图　Structural Demonstration

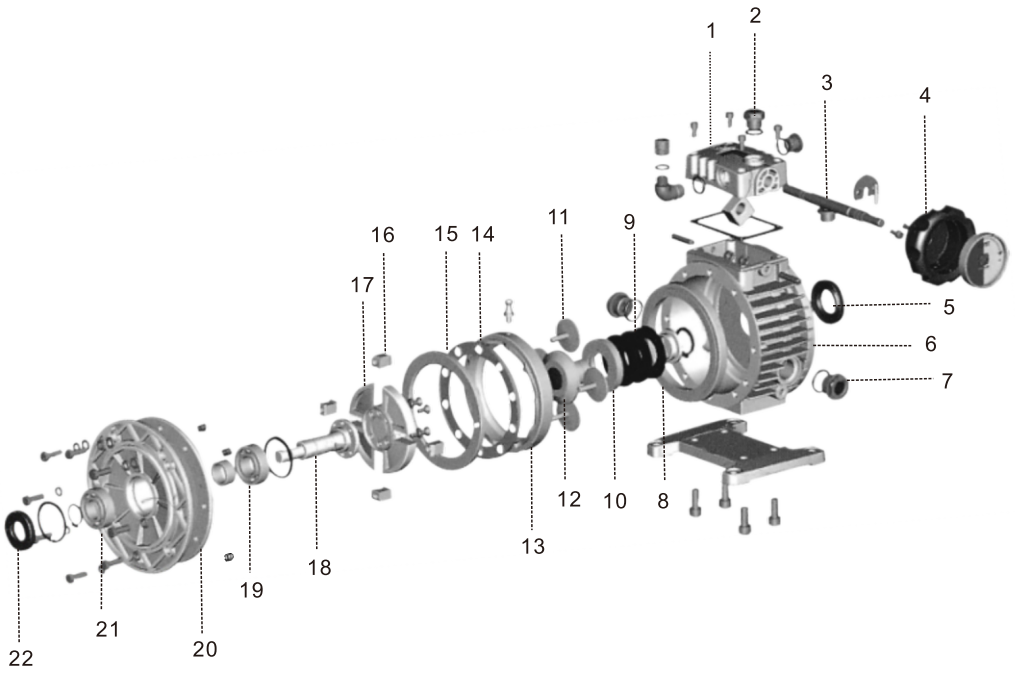

序号	名称
1	调速盖
2	通气螺塞
3	调速丝杆
4	调速手柄
5	油封
6	箱体
7	油镜
8	定环
9	蝶形弹簧
10	压轮
11	行星轮
12	恒轮
13	调速凸轮
14	平面轴承
15	固定平面凸轮

序号	名称
16	滑动轴承
17	转臂
18	输出轴
19	轴承
20	输出法兰
21	轴承
22	油封

No.	Name
1	Speed control cover
2	Breather vent
3	speed control lead screw
4	speed control handwheel
5	oil seal
6	tank
7	oil mirror
8	fixed ring
9	butterfly spring
10	press wheel
11	planetary wheel
12	constant wheel
13	speed-regulating cam
14	surface bearing
15	fixed cam

No.	Name
16	slide-block bearing
17	torque
18	output shaft
19	bearing
20	output flange
21	bearing
22	oil seal

WB SERIES

Of micro cycloidal speed reducer

WB 系列微型摆线减速机

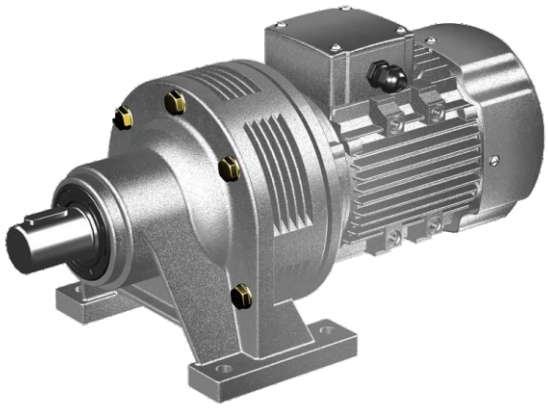

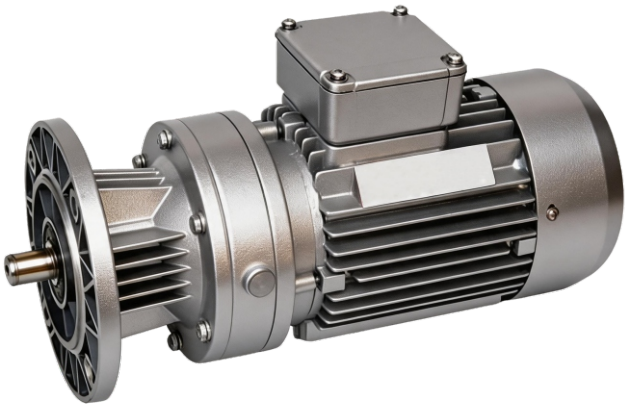

WB 系列微型摆线减速机
WB Series of micro cycloidal speed reducer

一、特点：

有关WB系列微型摆线针轮减速机的特点、用途可详见X系列摆线减速机，所不同的是机型更小、功率更小。
本系列减速机具有普通减速机的一切特点外，由于采用润滑脂润滑，不易漏油。同时根据用户的需要，可在任何方向任何角度安装使用。

二、微型减速机型号、减速比及其表示方式

a、单级减速比机型有WB65型、WB85型、WB100型、WB120型、WB150型。
其减速比分别有9、11、17、23、29、35、43、59、71、87。
b、双级减速比机型有WBE1065型、WBE1285型、WBE1510型
其减速比分别有：121、187、289、385、473、595、731、989、1225、1849。

一、Characterstics:

Refer to X series of cycloidal speed reducers for features and purposes of WB series of miniature cycloidal pin wheel speed reducers,which are smaller and have lower power.
Besides all features of common speed reducers, for lubricating grease is used in lubrication, oil leakage is unlikely on this series of speed reducers. Meanwhile, they can be installed in any directions, at any angles according to users'requirements.

二、Types,speed reduction ratio and their expressions of miniature speed reducers

a、Single-stage speed reducers: WB65 type,WB85 type,WB100 type,WB120 type,WB150 type, with speed reduction ratio as 9,11,17,23,29,35,43,59,71,87.
b、Double-stage speed reducers: WBE1065 type,WBE1065 type,WBE1285 type,WBE1510 type, with speed reduction ratio as 121,187,289,385,473,595,731,989,1225,1849.

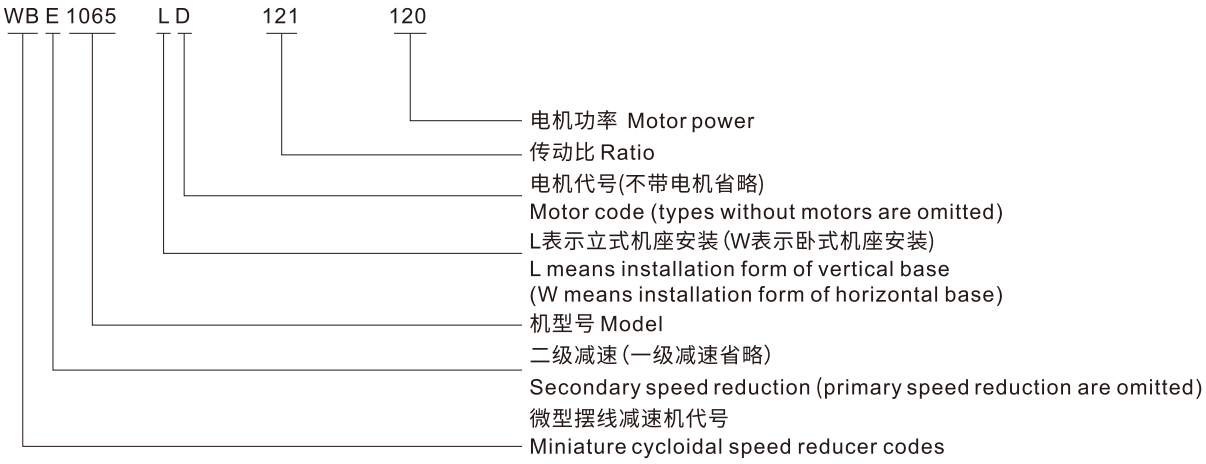

三、型号规格及选型参数表 Table of types and parameters

1、WB一级微型减速机型号规格选型参数 WB single-stage miniature speed reducer and parameters

机型 type	三相电动机(W) 3-phase motor	单相电动机(W) Single-phase motor	直流伺服电机（W) DC servo motor	制动电动机（W) Brake motor	传动比 Radio 9	11	17	23	29	35	43	59	71	87	低速轴许用扭矩N.m Allowable torque on low-speed spindle
65	40	40※				○	○	○	○	○	○				25
	60	60※	50			○	○	○	○	○	●				
	90	90※				○	○	○	○	●	△				
	120					○	○	○	●	△	△				
85	90	90▲	80			○	○	○	○	○	○				60
	120	120▲	123			○	○	○	○	○	●				
	180			200	○	○	○	○	○	●	△				
	250				○	○	○	○	●	△	△				
	370				○	○	○	●	△	△	△				
100	180	180★	185	200	○	○	○	○	○	○	○	○			120
	250	250★			○	○	○	○	○	○	○	●			
	370	370★	355	400	○	○	○	○	○	○	●	△			
	550				○	○	○	○	●	●	△	△			
	750				○	○	○	●	△	△	△	△			
120	370	370★	355	400	○	○	○	○	○	○	○	●	△		150
	550	550★		550	○	○	○	○	○	●	●	△	△		
	750	750★		750	○	○	○	○	●	△	△	△	△		
	1100				○	○	○	●	△	△	△	△	△		
	1500				○	○	●	△	△	△	△	△	△		
150	550	550★			○	○	○	○	○	○	○	○	●	△	250
	750	750★		750	○	○	○	○	○	○	○	●	△	△	
	1100			1100	○	○	○	○	○	●	●	△	△	△	
	1500			1500	○	○	○	●	●	△	△	△	△	△	
	2200			2200	○	○	●	△	△	△	△	△	△	△	
	3000			3000	○	●	△	△	△	△	△	△	△	△	
输出轴转数(r/min) Output shaft speed	四极电机时(1400r/min) 4-stage motor(1400r/min) 六极电机时(960r/min) 6-stage motor(960r/min)				155	127	82	60	48	40	32	23	20	16	
					106	87	56	41	33	27	22	16	13.5	11	

2、WBE二级减速机型号规格选型参数 WBE double-stage speed reducer types and parameters

机型 type	三相电动机(W) 3-phase motor	单相电动机(W) Single-phase motor	直流伺服电机(W) DC servo motor	制动电动机(W) Brake motor	传动比 Radio (11×11) 121	(11×17) 187	(17×17) 289	(11×35) 385	(11×43) 473	(17×35) 585	(17×43) 471	(23×23) 989	(35×35) 1225	(43×43) 1849	低速轴许用扭矩N. m Allowable torque on low-speed spindle
1065	40	40※			○	○	○	○	●	△	△	△	△	△	120
	60	60※	50		○	○	○	●	△	△	△	△	△	△	
	90	90※			○	●	△	△	△	△	△	△	△	△	
	120				●	△	△	△	△	△	△	△	△	△	
1285	90	90▲	80		○	○	○	●	△	△	△	△	△	△	150
	120	120▲	123		○	○	●	△	△	△	△	△	△	△	
	180			200	○	●	△	△	△	△	△	△	△	△	
	250				●	△	△	△	△	△	△	△	△	△	
	370				△	△	△	△	△	△	△	△	△	△	
1510	180	180★		200	○	○	●	△	△	△	△	△	△	△	250
	250	250★			○	●	△	△	△	△	△	△	△	△	
	370	370★	355	400	●	△	△	△	△	△	△	△	△	△	
	550				△	△	△	△	△	△	△	△	△	△	
	750				△	△	△	△	△	△	△	△	△	△	
当四级电机时(1400r/min)其输出轴转数(r/min) When 4-stage motor Output revolution power of motor					11.5	7.5	4.8	3.6	3	2.3	1.9	1.4	1.1	0.7	

●表示电机可全容量使用 △表示电机大于设计功率 ★表示单相电容启动电机
○表示电机小于设计功率 ▲表示单相电阻启动电机 ※表示单相电容运转电动机

●Motor can work with full capacity △Motor power is higer than designed powe ★Single-phase capacitive start motor
○Motor power is lower than designed power ▲Single-phase resistant start motor ※Single-phase capacitive motor

四、外形及其安装尺寸 Overall and installation dimensions

1、WB、WBD型卧式单级摆线减速机外型及安装尺寸
1、WB、WBD type horizontal single-stage cycloidal speed reducer apearance and installation dimension

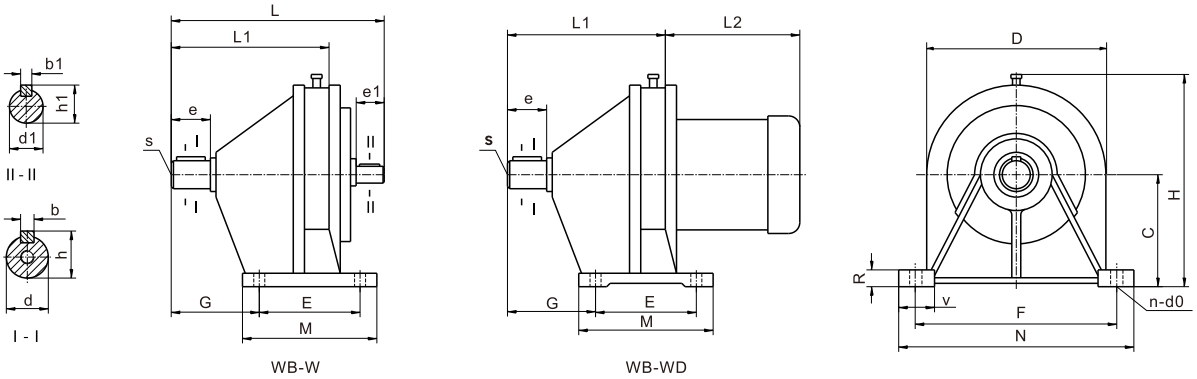

机型 Type	外形尺寸 Appearance size						安装尺寸 Installation size									输入轴 Shaft input				输出轴 input shaft				重量(kg) Weight	
	H	M	N	D	L	L1	C	G	R	E	F	S	V	n	d0	b1	h1	d1	e1	b	h	d	e	带D	不带D
65	120	90	150	110	135	95	60	45	10	60	130	M5	26	4	7	3	11	10	16	4	13.5	12	20	7	5
85	140	100	175	122	152	110	70	53	12	70	150	M5	26	4	9	3	13	12	16	5	16	14	23	9	6
100	155	110	185	142	175	130	80	63	14	80	160	M6	26	4	9	5	17	15	20	6	20.5	18	25	13	9
120	190	120	185	168	215	165	100	93	18	90	150	M8	32	4	11	5	17	15	22	8	33	30	35	18	14
150	235	160	250	210	260	200	120	115	22	120	210	M8	42	4	15	6	22.5	20	30	10	38.5	35	55	35	20

注:L2详见第72页 Note:see page 72 for L2

2、WBL(WBLD)型立式单级摆线减速机外型及安装尺寸
2、WB WBD type vertical single-stage cycloidal speed reducer appearance and installation dimension

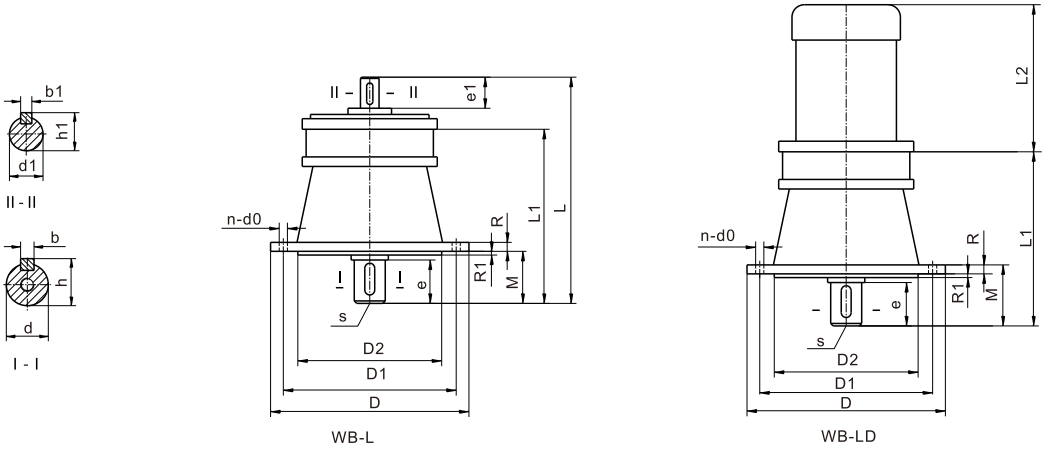

机型 Type	外形尺寸 Appearance size				安装尺寸 Installation size								输入轴 Shaft input				输出轴 input shaft				重量(kg) Weight	
	D	L1	L	L2	D1	n	do	R	R1	M	D2	S	b1	h1	d1	e1	b	h	d	e	带D	不带D
65	120	95	135	视电机尺寸决定 Decided by motor size	100	4	7	8	2.5	24	65	M5	3	11	10	16	4	13.5	12	20	6.5	4.5
85	140	110	152		120	4	9	10	2.5	27	85	M5	3	13	12	16	5	16	14	23	8.5	4.5
100	160	130	175		134	4	9	12	3	30	100	M6	5	17	15	20	6	20.5	18	25	12	8
120	190	165	215		160	4	11	12	3	39	140	M8	5	17	15	22	8	33	30	35	17	13
150	230	200	260		200	6	11	14	3.5	60	170	M8	6	22.5	20	30	10	38.5	35	55	35	20

注：L2详见第72页 Note:see page 72 for L2

3、单级立式L1(D)外型安装及连接尺寸
3、Primary vertical L1(D),installation dimensions

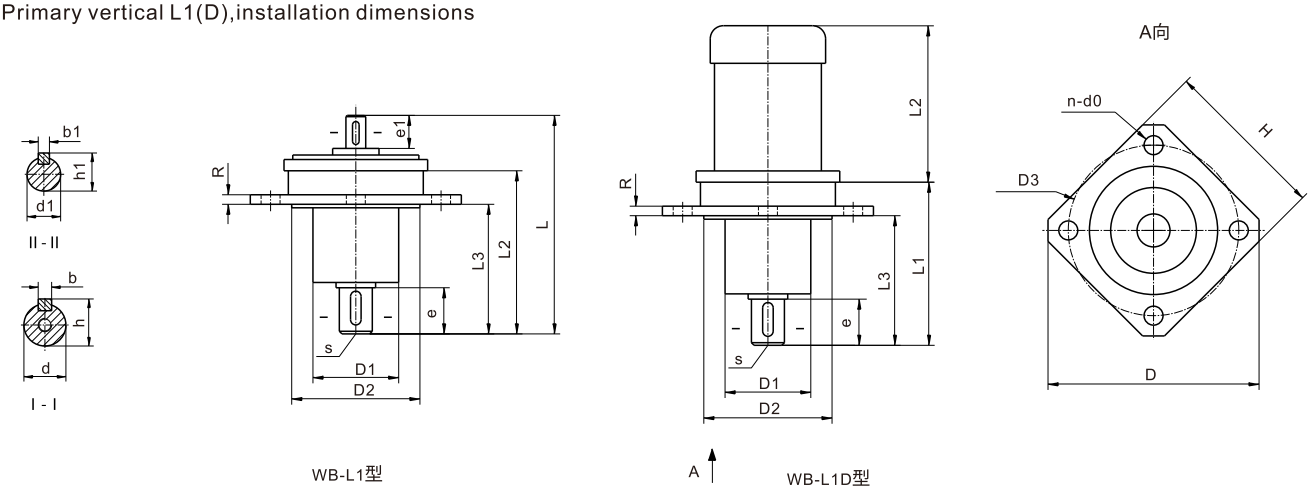

WB-L1型　　A　　WB-L1D型

机型 Type	外形尺寸 Appearance size						安装尺寸 Installation size							输入轴 Shaft input				输出轴 input shaft			
	D	H	d1	L1	L	L2	d3	n	d0	R	d2h8	L3	S	b1	h1	d1js6	e1	b	h	djs6	e
WB65	145	105	50	95	135	See motor list 详见电机一览表	125	4	7	10	65	65	M5	3	11	10	16	4	13.5	12	20
WB85	165	125	55	110	152		140	4	9	12	85	83	M5	3	13	12	16	5	16	14	23
WB100	185	140	65	130	175		160	4	9	14	100	100	M6	5	17	15	20	6	20.5	18	25
WB120	210	170	90	165	215		185	4	11	14	120	120	M8	5	17	15	22	8	33	30	35
WB150	270	210	115	200	260		240	4	13	15	150	150	M8	6	22.5	18	30	10	38.5	35	55

注:L2详见第72页　Note:see page 72 for L2

4、双级立式L1(D)外型安装及连接尺寸
4、Double-stage vertical L1(D),installation and coupling dimensions

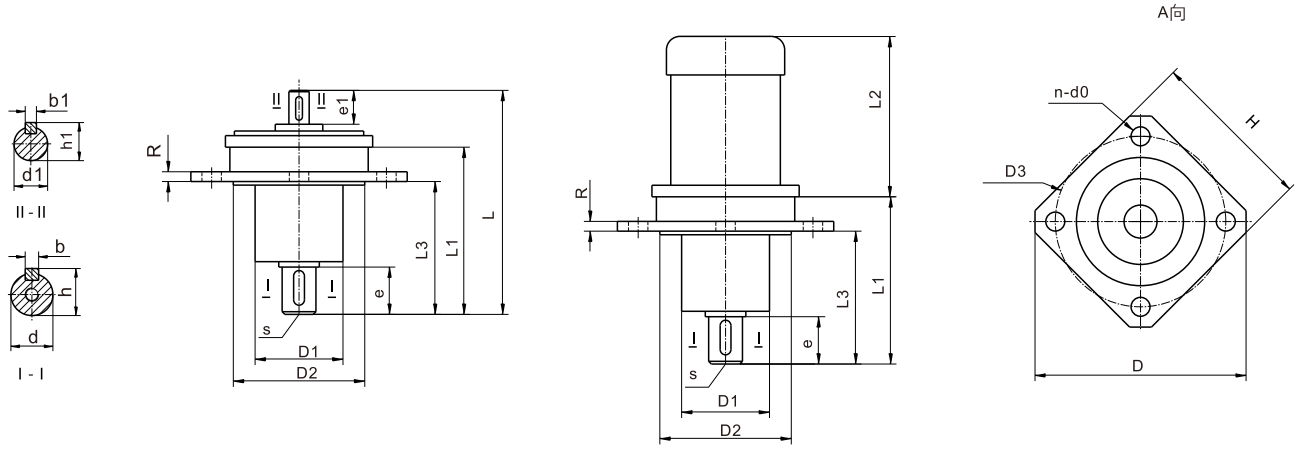

WBE-L1型　　A　　WBE-L1D型

机型 Type	外形尺寸 Appearance size						安装尺寸 Installation size							输入轴 Shaft input				输出轴 input shaft			
	D	H	d1	L1	L	L2	d3	n	d0	R	d2h8	L3	S	b1	h1	d1js6	e1	b	h	djs6	e
WBE1065	185	140	65	185	225	详见电机一览表 See motor list	160	4	9	14	100	94	M6	3	11	10	16	6	20.5	18	25
WBE1285	210	170	90	230	272		185	4	11	14	120	118	M8	3	13	12	16	8	33	30	35
WBE1510	270	210	115	295	340		240	4	13	15	150	140	M8	5	17	15	20	10	38.5	35	55

注:L2详见第72页　Note:see page 72 for L2

5、WBE(WBED)型卧式双级摆线减速机外型及安装尺寸
WBE(WBED)type horizontal double cycloidal speed reducer appearance installation dimension

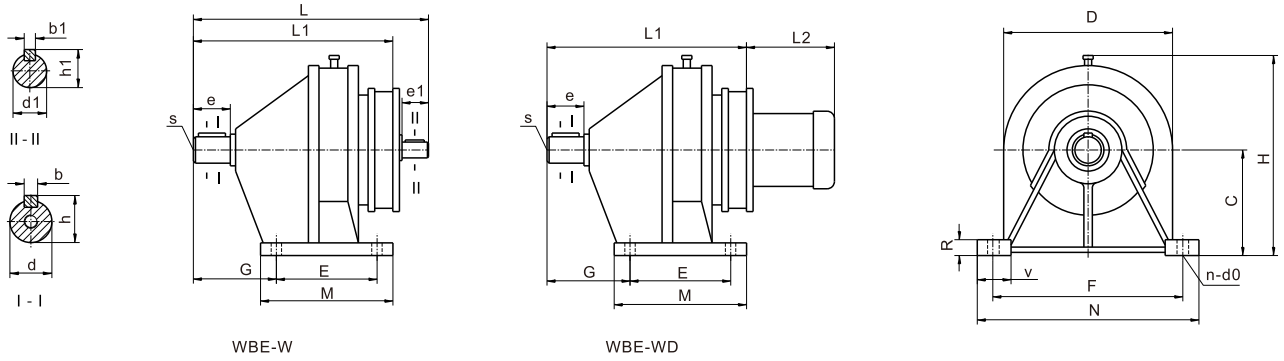

机型 Type	外形尺寸 Appearance size						安装尺寸 Installation size									输入轴 Input shaft				输出轴 Output shaft				重量(kg) Weight	
	H	M	N	D	L	L1	C	G	R	E	F	S	V	n	d0	b1	h1	d1	e1	b	h	d	e	带D	不带D
1065	155	110	185	142	225	182	80	63	14	80	160	M6	26	4	9	3	11	10	16	6	20.5	18	15	15.5	13.5
1285	190	120	185	168	230	228	100	93	18	90	150	M8	32	4	11	3	13	12	16	8	33	30	35	20	16
1510	235	160	250	210	295	264	120	114	22	120	210	M8	42	4	15	4	16.5	15	20	10	38.5	35	55	40	25

注:L2详见第72页 Note:see page 72 for L2

6、WBLE(WBLED)型立式双级摆线减速机外型及安装尺寸
WBLE(WBLED)type vertical double-stage cycloidal speed reducer appearance and installation dimension

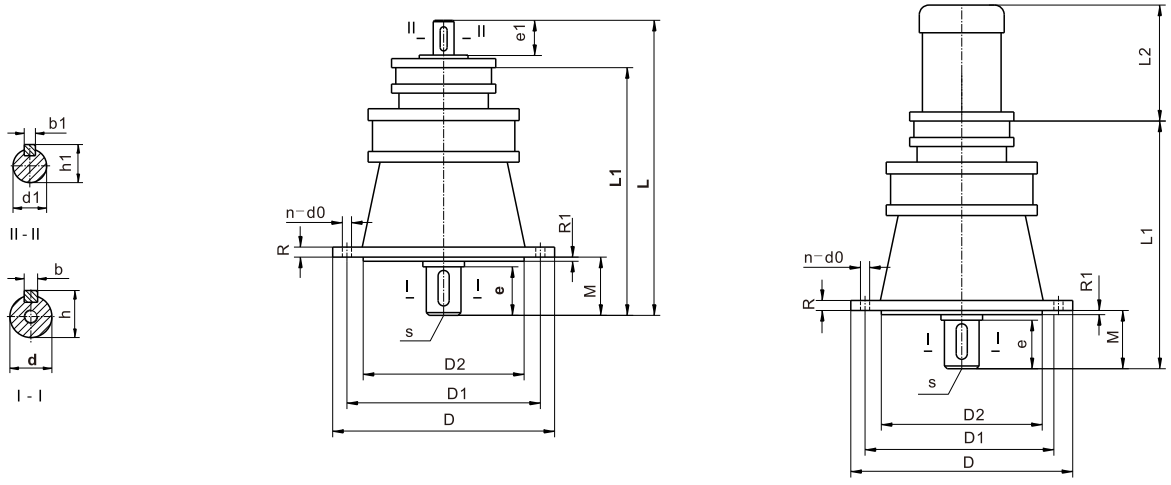

机型 Type	外形尺寸 Appearance size			安装尺寸 Installation size								输入轴 Input shaft				输出轴 Output shaft				重量(kg) Weight	
	D	L1	L	D1	n	d0	R	R1	M	D2	S	b1	h1	d1	e1	b	h	d	e	带D	不带D
1065	160	185	225	134	4	9	12	3	30	100	M6	3	11	10	16	6	20.5	18	25	13.5	11.5
1285	190	230	272	160	4	11	12	3	39	140	M8	3	13	12	16	8	33	30	35	19.5	16.5
1510	230	295	340	200	6	11	14	4	60	170	M8	5	17.5	15	20	10	38.5	35	55	40	25

注:L2详见第72页 Note:see page 72 for L2

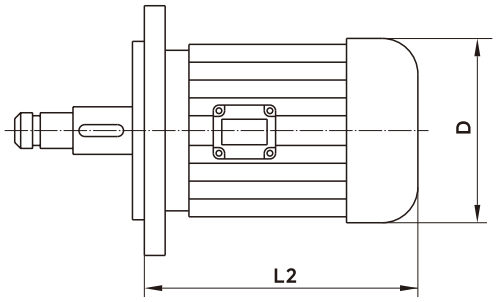

五、常用电机及电机外型尺寸 Common motors and dimensions

电动机类型 Motor type	功率(W) Power	转数(r/min) Potational speed	电压(V) Voltage	L2	D	配置相应机型 Corresponding machinetype disposed
三相异步电动机 Three-phase asynchronous motor	40	1400	380	130	95	65 1065
	60	1400				
	90	1400		170	115	65 85 1065 1285
	120	1400				
	180	1400		190	130	85 100 1285
	250	1400				
	370	1400				
	550	1400		225	150	100 120 1510
	750	1400				
	1100	1400		260	175	120 150
	1500	1400		285		
	2200	1400				
	3000	1400		320	205	150
单相电容运转电动机 Single-phase permanent-capacitor motor	40	1400	220	130	95	65 1065
	60	1400				
	90	1400		170	115	65 85 1065 1285
单相电阻启动电动机 Single-phase resistance starting motor	90	1400				
	120	1400		195	130	85 100 1285
单相电容启动电动机 Single-phase capacitor-start motot	180	1400				
	250	1400				
	370	1400		225	150	100 120 1510
	550	1400				
	750	1400		285	195	120 150
直流伺服电动机 DC servo motor	50	1400	110 220	160	95	65 1065
	80	1400		180	95	65 85 1065 1285
	123	1400		200	115	85 100 1285
	185	1400		230		
	355	1400		270	135	100 120 1510
制动电动机 Brake motor	550	1400	380	375	165	120 150
	750	1400				
	1100	1400		410	180	120 150
	1500	1400		430	180	120 150
	2200	1400		320	205	150
	3000	1400				

微型摆线减速机许用扭矩 Allowable torque of miniature cycloidal speed reducers

机型Type	Wb65	Wb85	Wb100	Wb120	Wb150	WBE1065	WBE1285	WBE1510
许用扭矩极限值 (N.M) Maximum torque allowed(N.M)	25	60	120	180	250	120	180	250

X、B、JXJ SERIES

cycloid reducer

X、B、JXJ 系列摆线针轮减速机

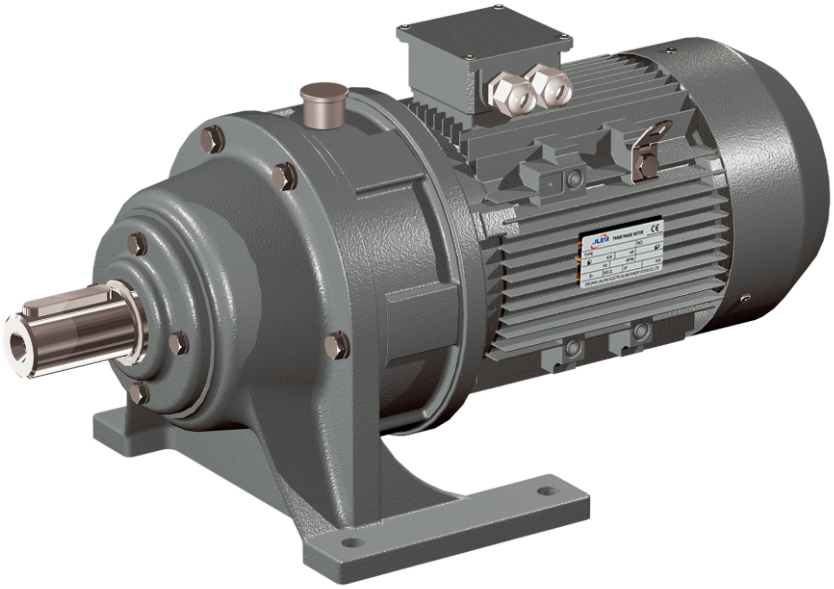

X、B、JXJ系列摆线针轮减速机
X、B、JXJ Series cycloid reducer

一、特点 Characteristics

1、传动比大
一级减速时传动比为1/9-1/87;两级减速时传动比为1/99-1/7569;三级减速时传动比为1/2057-1/658503;
根据需要可采用更多级组合。

2、传动效率高
该机啮合部位采用了滚动啮合，平均效率可达90%以上。

3、体积小、重量轻
采用行星传动原理，输入轴和输出轴在同一条轴线上，与电机直联呈一体的独特之处，因而具有结构紧凑、体积小、重量轻的特点。

4、故障少、寿命长、
本机主要传动啮合件使用轴承钢制造，因此机械性能好，耐磨性能好，再加采用滚动磨擦，故障少、寿命长。

5、运传可靠平稳
本机传动过程中为多齿啮合，所以使之运转平稳可靠、噪音低。

6、拆装方便，容易维修：
由于结构设计合理拆装简单便于维修。

7、本机还具有过载能力强、耐冲击、惯性力矩小，适用于起动频繁和正反转的特点。

1、Large ratio
The ratio is 1/9-1/87 at first stage drive,1/99-1/7569 at two-stage drive□1/2057-1/658503 at three-stage drive; and also can have combo reduce per requirement.

2、High efficiency
Because of rolling mesh at gearing, the average efficiency is over 90%.

3、Small size and light weight
With planetary transmission, the input and output and output shafts are in same axis, and unit is combined with motor in line.

4、Less problem,long working life
The main gearing parts were made by bearing steel, the unit has good mechanical properties, by rolling attrition, it's less problem and long working life.

5、Stable reliable during, the unit is working by teeth meshing, thus it works stable and low noisy.

6、Easy disassembly, maintaining: with professional design, the unit is disassembly and maintain easily.

7、High overloading, attacking and less inertia torque, the unit can be used in case of frequency starting and reversing.

二、本产品执行JB/T2982-94 国际标准 This product performs JB/T2982-94 national standards

三、机型对照表 Contrast different frame size

单级机型对照表 Single-stage speed reducer contrast different frame size

系列标准 Series standard	机型 Type									
X天津	X2	X3	X4	X5	X6	X7	X8	X9	X10	X11
B化工部	B0	B1	B2	B3	B4		B5	B6	B7	B8
B机械部	B12	B15	B18	B22	B27		B33	B39	B45	B55
JXJ江门	JXJ0	JXJ1	JXJ2	JXJ3	JXJ4		JXJ5	JXJ6	JXJ7	JXJ8

双级机型对照表 Double-stage speed reducer contrast different frame size

系列标准 Series standard	机型 Type										
X天津	X32	X42	X53	X63	X64	X74	X84	X85	X95	X106	X117
B化工部	B10	B20	B31	B41	B42		B52	B53	B63	B74	B85
B机械部	B1512	B1812	B2215	B2715	B2718		B3318	B3322	B3922	B4527	B5527
JXJ江门	JXJE10	JXJE20	JXJE31	JXJE41	JXJE42		JXJE52	JXJE53	JXJE63	JXJE74	JXJE85

四、机型号表示示例 Example for type designation

型号中的字母代表 Letter sign



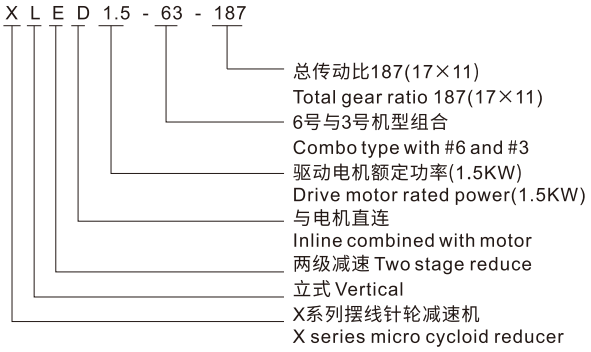

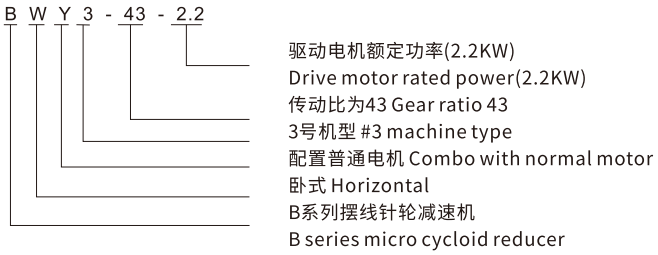

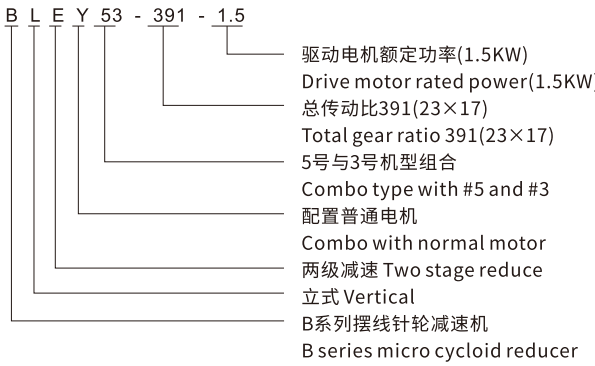

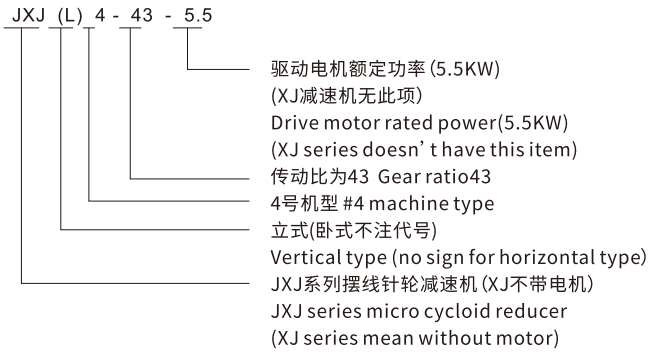

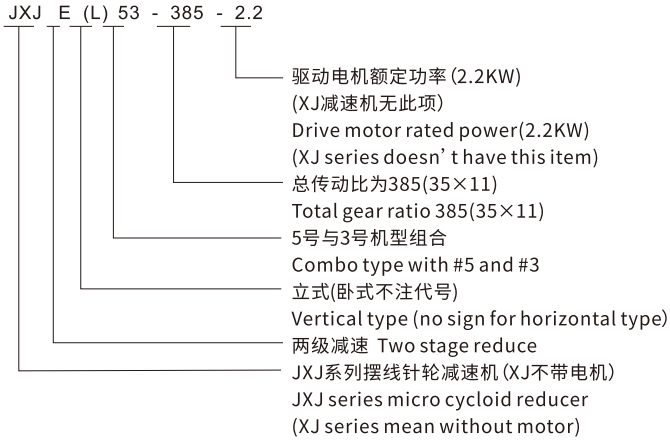

五、摆线减速机许用扭矩表
Table of allowable torque of cycloid speed reducer

机型Type	X2	X3	X4	X5	X6	X7	X8	X9	X10	X11
许用扭矩极限值N.m Limited torque data N.m	150	250	500	1000	2000	2700	4500	7100	12000	20000

六、单级X摆线减速机型号规格及选型参考

Model and specification of single stage X cycloid speed reducer and reference for its model selection

机型Type	配置电机功率(KW) Power of motor disposed	减速机 Reducer ratio									
		9	11	17	23	29	35	43	59	71	87
		输出扭矩N.m Output torque									
X2	0.37	20.4	24.9	38.5	52.1	65.7	79.3	97.2	133	-	-
	0.55	30.3	37.1	57.4	77.6	97.2	117	145	-	-	-
	0.75	41.4	50.5	78.3	106	133	-	-	-	-	-
	1.1	-	-	-	-	-	-	-	-	-	-
	1.5	-	-	-	-	-	-	-	-	-	-
当输入1400r/min时 When 1400r/min input	输出转数r/min Output revolution power of motor disposed	155	127	82	60	48	40	32	23	-	-
当输入960r/min时 When 960r/min input		106	87	56	41	33	27	22	16	-	-

机型Type	配置电机功率(KW) Power of motor disposed	减速机 Reducer ratio									
		9	11	17	23	29	35	43	59	71	87
		输出扭矩N.m Output torque									
X3	0.55	30.3	37.1	57.4	77.6	97.2	117	145	199	239	-
	0.75	41.4	50.5	78.3	106	133	161	198	271	-	-
	1.1	60.5	74	114	155	195	235	-	-	-	-
	1.5	82.9	100	156	211	266	-	-	-	-	-
	2.2	121	148	230	-	-	-	-	-	-	-
当输入1400r/min时 When 1400r/min input	输出转数r/min Output revolution power of motor disposed	155	127	82	60	48	40	32	23	20	-
当输入960r/min时 When 960r/min input		106	87	56	41	33	27	22	16	13	-

机型Type	配置电机功率(KW) Power of motor disposed	减速机 Reducer ratio									
		9	11	17	23	29	35	43	59	71	87
		输出扭矩N.m Output torque									
X4	0.75	41.4	50.5	78.3	106	133	161	198	271	326	400
	1.1	60.5	74	114	155	195	235	289	397	478	-
	1.5	82.9	100	156	211	266	322	396	-	-	-
	2.2	121	148	229	310	391	472	-	-	-	-
	3.0	165	202	313	423	-	-	-	-	-	-
	4	220	270	416	-	-	-	-	-	-	-
当输入1400r/min时 When 1400r/min input	输出转数r/min Output revolution power of motor disposed	155	127	82	60	48	40	32	23	20	17
当输入960r/min时 When 960r/min input		106	87	56	41	33	27	22	16	13	11

机型Type	配置电机功率(KW) Power of motor disposed	减速机 Reducer ratio									
		9	11	17	23	29	35	43	59	71	87
		输出扭矩N.m Output torque									
X5	1.5	82.9	100	156	211	266	322	396	542	653	801
	2.2	121	148	229	310	391	472	580	796	958	-
	3.0	165	202	313	423	533	644	792	-	-	-
	4.0	220	270	416	564	712	859	-	-	-	-
	5.5	304	370	574	776	979	-	-	-	-	-
	7.5	414	506	783	-	-	-	-	-	-	-
当输入1400r/min时 When 1400r/min input	输出转数r/min Output revolution power of motor disposed	155	127	82	60	48	40	32	23	20	17
当输入960r/min时 When 960r/min input		106	87	56	41	33	27	22	16	13	11

机型Type	配置电机功率(KW) Power of motor disposed	减速机 Reducer ratio									
		9	11	17	23	29	35	43	59	71	87
		输出扭矩N.m Output torque									
X6	2.2	121	148	229	310	391	472	580	796	958	1174
	3.0	165	202	313	423	533	644	792	1086	1307	1602
	4.0	220	270	416	564	712	859	1055	1450	1743	-
	5.5	304	370	574	776	979	1181	1451	-	-	-
	7.5	414	506	783	1059	1335	1612	-	-	-	-
	11	607	743	1148	1553	-	-	-	-	-	-
当输入1400r/min时 When 1400r/min input	输出转数r/min Output revolution power of motor disposed	155	127	82	60	48	40	32	23	20	17
当输入960r/min时 When 960r/min input		106	87	56	41	33	27	22	16	13	11

机型Type	配置电机功率(KW) Power of motor disposed	减速机 Reducer ratio									
		9	11	17	23	29	35	43	59	71	87
		输出扭矩N.m Output torque									
X7	3.0	165	202	313	423	533	644	792	1086	1307	1602
	4.0	220	270	416	564	712	859	1055	1450	-	-
	5.5	304	370	574	776	979	1181	1451	-	-	-
	7.5	414	506	783	1059	1335	1612	-	-	-	-
	11	607	743	1148	1553	-	-	-	-	-	-
当输入1400r/min时 When 1400r/min input	输出转数r/min Output revolution power of motor disposed	155	127	82	60	48	40	32	23	20	17
当输入960r/min时 When 960r/min input		106	87	56	41	33	27	22	16	13	11

机型Type	配置电机功率(KW) Power of motor disposed	减速机 Reducer ratio									
		9	11	17	23	29	35	43	59	71	87
		输出扭矩N.m Output torque									
X8	5.5	304	370	574	776	979	1181	1451	1992	2397	2937
	7.5	414	506	783	1059	1335	1612	1979	2716	3268	3791
	11	607	742	1147	1553	1958	2363	2903	4110	-	-
	15	831	1015	1572	2148	2686	3223	4028	-	-	-
	18.5	1489	1821	2896	3808	-	-	-	-	-	-
当输入1400r/min时 When 1400r/min input	输出转数r/min Output revolution power of motor disposed	155	127	82	60	48	40	32	23	20	17
当输入960r/min时 When 960r/min input		106	87	56	41	33	27	22	16	13	11

机型Type	配置电机功率(KW) Power of motor disposed	减速机 Reducer ratio									
		9	11	17	23	29	35	43	59	71	87
		输出扭矩N.m Output torque									
X9	7.5	414	506	783	1059	1335	1612	1979	2716	3268	3791
	11	607	742	1147	1553	1969	2363	2954	4110	4729	5561
	15	831	1015	1572	2148	2686	3223	4028	5605	-	-
	18.5	1489	1821	2896	3808	4803	5796	7121	-	-	-
	22	1771	2165	3346	4527	5709	6890	-	-	-	-
	30	2416	2954	4566	6179	-	-	-	-	-	-
当输入1400r/min时 When 1400r/min input	输出转数r/min Output revolution power of motor disposed	155	127	82	60	48	40	32	23	20	17
当输入960r/min时 When 960r/min input		106	87	56	41	33	27	22	16	13	11

机型Type	配置电机功率(KW) Power of motor disposed	减速机 Reducer ratio									
		9	11	17	23	29	35	43	59	71	87
		输出扭矩 N.m Output torque									
X10	15	-	1015	1572	2148	2685	3223	4028	5605	6446	7583
	18.5	-	1821	2896	3808	4803	5796	7121	9772	11759	-
	22	-	2165	3346	4527	5709	6890	8465	11625	-	-
	30	-	2954	4566	6179	7791	9403	11552	-	-	-
	37	-	3641	5627	7614	9610	11587	-	-	-	-
	45	-	4428	6843	9259	11674	-	-	-	-	-
当输入1400r/min时 When 1400r/min input	输出转数r/min Output revolution power of motor disposed	-	127	82	60	48	40	32	23	20	17
当输入960r/min时 When 960r/min input		-	87	56	41	33	27	22	16	13	11

机型Type	配置电机功率(KW) Power of motor disposed	减速机 Reducer ratio									
		9	11	17	23	29	35	43	59	71	87
		输出扭矩 N.m Output torque									
X11	18.5	-	1821	2896	3808	4803	5796	7121	9772	11759	14455
	22	-	2165	3346	4527	5709	6890	8465	11625	14545	-
	30	-	2954	4566	6179	7791	9403	11552	16115	-	-
	37	-	3641	5627	7614	9610	11587	14455	-	-	-
	45	-	4428	6843	9259	11674	14325	-	-	-	-
	55	-	5496	8441	11529	14325	17508	-	-	-	-
当输入1400r/min时 When 1400r/min input	输出转数r/min Output revolution power of motor disposed	-	127	82	60	48	40	32	23	20	17
当输入960r/min时 When 960r/min input		-	87	56	41	33	27	22	16	13	11

注:1、“-”如须选用特殊订货
2、参考表中的输出扭矩是按电机功率15KW以下为4极电机1400r/min时值。18.5KW及以上按6极电机960r/min时值。
Note:1."-" need special ordering
2.The output torque in reference table is for 4 pole,1400r/min motor below 15KW.For 18.5KW and above per 6 pole 960r/min motor data.

七、双级减速机型号规格及选型参考
Model and specifications of double-stage reducer and reference for its model selection.

机型Type	配置电机功率(KW) Power of motor disposed	减速机 Reducer ratio									
		121 11×11	187 11×17	289 17×17	385 11×35	473 11×43	595 17×35	731 17×43	989 23×43	1225 35×35	1849 43×43
		输出扭矩 N.m Output torque									
XE42	0.37	244	376	490	-	-	-	-	-	-	-
	0.55	363	454	-	-	-	-	-	-	-	-
	0.75	495	-	-	-	-	-	-	-	-	-
当输入1400r/min时 When 1400r/min input	输出转数r/min Output revolution power of motor disposed	11.5	7.5	4.8	3.6	3	2.3	1.9	1.4	1.1	0.7
当输入960r/min时 When 960r/min input		8	5	3.3	2.5	2	1.6	1.3	1.0	0.8	0.5

机架Type	配置电机功率(KW) Power of motor disposed	减速机 Reducer ratio									
		121 11×11	187 11×17	289 17×17	385 11×35	473 11×43	595 17×35	731 17×43	989 23×43	1225 35×35	1849 43×43
		输出扭矩 N.m Output torque									
XE53	0.55	363	560	867	981	-	-	-	-	-	-
	0.75	495	765	981	-	-	-	-	-	-	-
	1.1	726	981	-	-	-	-	-	-	-	-
	1.5	990	-	-	-	-	-	-	-	-	-
当输入1400r/min时 When 1400r/min input	输出转数r/min Output revolution power of motor disposed	11.5	7.5	4.8	3.6	3	2.3	1.9	1.4	1.1	0.7
当输入960r/min时 When 960r/min input		8	5	3.3	2.5	2	1.6	1.3	1.0	0.8	0.5

机型Type	配置电机功率(KW) Power of motor disposed	减速机 Reducer ratio									
		121 11×11	187 11×17	289 17×17	385 11×35	473 11×43	595 17×35	731 17×43	989 23×43	1225 35×35	1849 43×43
		输出扭矩N.m Output torque									
XE63	0.75	495	765	1183	1576	1807	1961	-	-	-	-
	1.1	726	1122	1735	1961	-	-	-	-	-	-
	1.5	990	1531	1961	-	-	-	-	-	-	-
	2.2	1452	1950	-	-	-	-	-	-	-	-
当输入1400r/min时 When 1400r/min input	输出转数r/min Output revolution power of motor disposed	11.5	7.5	4.8	3.6	3	2. 3	1. 9	1.4	1.1	0.7
当输入960r/min时 When 960r/min input		8	5	3.3	2.5	2	1. 6	1. 3	1.0	0.8	0.5

机型Type	配置电机功率(KW) Power of motor disposed	减速机 Reducer ratio									
		121 11×11	187 11×17	289 17×17	385 11×35	473 11×43	595 17×35	731 17×43	989 23×43	1225 35×35	1849 43×43
		输出扭矩N.m Output torque									
XE64	0.75	495	765	1183	1576	1936	-	-	-	-	-
	1.1	726	1122	1735	1936	-	-	-	-	-	-
	1.5	990	1531	1936	-	-	-	-	-	-	-
	2.2	1452	1936	-	-	-	-	-	-	-	-
当输入1400r/min时 When 1400r/min input	输出转数r/min Output revolution power of motor disposed	11.5	7.5	4.8	3.6	3	2. 3	1. 9	1.4	1.1	0.7
当输入960r/min时 When 960r/min input		8	5	3.3	2.5	2	1. 6	1. 3	1.0	0.8	0.5

机型Type	配置电机功率(KW) Power of motor disposed	减速机 Reducer ratio									
		121 11×11	187 11×17	289 17×17	385 11×35	473 11×43	595 17×35	731 17×43	989 23×43	1225 35×35	1849 43×43
		输出扭矩N.m Output torque									
XE74	1.1	726	1122	1735	2150	2648	-	-	-	-	-
	1.5	990	1531	2366	2648	-	-	-	-	-	-
	2.2	1452	2244	2650	-	-	-	-	-	-	-
	3.0	1981	2700	-	-	-	-	-	-	-	-
当输入1400r/min时 When 1400r/min input	输出转数r/min Output revolution power of motor disposed	11.5	7.5	4.8	3.6	3	2. 3	1. 9	1.4	1.1	0.7
当输入960r/min时 When 960r/min input		8	5	3.3	2.5	2	1. 6	1. 3	1.0	0.8	0.5

机型Type	配置电机功率(KW) Power of motor disposed	减速机 Reducer ratio									
		121 11×11	187 11×17	289 17×17	385 11×35	473 11×43	595 17×35	731 17×43	989 23×43	1225 35×35	1849 43×43
		输出扭矩N.m Output torque									
XE84	1.5	990	1531	2366	3152	3872	4413	-	-	-	-
	2.2	1452	2244	3469	4014	4413	-	-	-	-	-
	3.0	1981	3062	4910	4413	-	-	-	-	-	-
	4.0	2641	4082	4413	-	-	-	-	-	-	-
当输入1400r/min时 When 1400r/min input	输出转数r/min Output revolution power of motor disposed	11.5	7.5	4.8	3.6	3	2.3	1.9	1.4	1.1	0.7
当输入960r/min时 When 960r/min input		8	5	3.3	2.5	2	1.6	1.3	1.0	0.8	0.5

机型Type	配置电机功率(KW) Power of motor disposed	减速机 Reducer ratio									
		121 11×11	187 11×17	289 17×17	385 11×35	473 11×43	595 17×35	731 17×43	989 23×43	1225 35×35	1849 43×43
		输出扭矩 N.m Output torque									
XE85	2.2	1452	2244	3469	4314	-	-	-	-	-	-
	3.0	1981	3062	4310	4413	-	-	-	-	-	-
	4.0	2641	4082	4413	-	-	-	-	-	-	-
	5.5	3633	4413	-	-	-	-	-	-	-	-
当输入1400r/min时 When 1400r/min input	输出转数r/min Output revolution power of motor disposed	11.5	7.5	4.8	3.6	3	2.3	1.9	1.4	1.1	0.7
当输入960r/min时 When 960r/min input		8	5	3.3	2.5	2	1.6	1.3	1.0	0.8	0.5

机型Type	配置电机功率(KW) Power of motor disposed	减速机 Reducer ratio									
		121 11×11	187 11×17	289 17×17	385 11×35	473 11×43	595 17×35	731 17×43	989 23×43	1225 35×35	1849 43×43
		输出扭矩 N.m Output torque									
XE95	3.0	1981	3062	4732	6305	7220	7990	8820	-	-	-
	4.0	2641	4082	6309	7843	8820	-	-	-	-	-
	5.5	3633	5614	7840	8820	-	-	-	-	-	-
	7.5	4953	7142	8820	-	-	-	-	-	-	-
当输入1400r/min时 When 1400r/min input	输出转数r/min Output revolution power of motor disposed	11.5	7.5	4.8	3.6	3	2.3	1.9	1.4	1.1	0.7
当输入960r/min时 When 960r/min input		8	5	3.3	2.5	2	1.6	1.3	1.0	0.8	0.5

机型Type	配置电机功率(KW) Power of motor disposed	减速机 Reducer ratio									
		121 11×11	187 11×17	289 17×17	385 11×35	473 11×43	595 17×35	731 17×43	989 23×43	1225 35×35	1849 43×43
		输出扭矩 N.m Output torque									
Xe106	4.0	2641	4082	6309	8405	10326	11767	-	-	-	-
	5.5	3633	5614	8677	11560	11767	-	-	-	-	-
	7.5	4953	7656	11767	-	-	-	-	-	-	-
	11	7259	11767	-	-	-	-	-	-	-	-
当输入1400r/min时 When 1400r/min input	输出转数r/min Output revolution power of motor disposed	11.5	7.5	4.8	3.6	3	2.3	1.9	1.4	1.1	0.7
当输入960r/min时 When 960r/min input		8	5	3.3	2.5	2	1.6	1.3	1.0	0.8	0.5

机型Type	配置电机功率(KW) Power of motor disposed	减速机 Reducer ratio									
		121 11×11	187 11×17	289 17×17	385 11×35	473 11×43	595 17×35	731 17×43	989 23×43	1225 35×35	1849 43×43
		输出扭矩 N.m Output torque									
XE117	4.0	2641	4082	6309	8405	10326	12986	15955	17310	19612	-
	5.5	3633	5614	8677	11560	14195	17856	19612	-	-	-
	7.5	4953	7656	11832	15755	17067	19612	-	-	-	-
	11	7259	11219	17346	19612	-	-	-	-	-	-
	15	9900	15305	19612	-	-	-	-	-	-	-
当输入1400r/min时 When 1400r/min input	输出转数r/min Output revolution power of motor disposed	11.5	7.5	4.8	3.6	3	2.3	1.9	1.4	1.1	0.7
当输入960r/min时 When 960r/min input		8	5	3.3	2.5	2	1.6	1.3	1.0	0.8	0.5

八.BW、BWD、XW、XWD型(单级)外形及安装尺寸
Model BW、BWD、XW、XWD (single reduction) contour and installation dimension

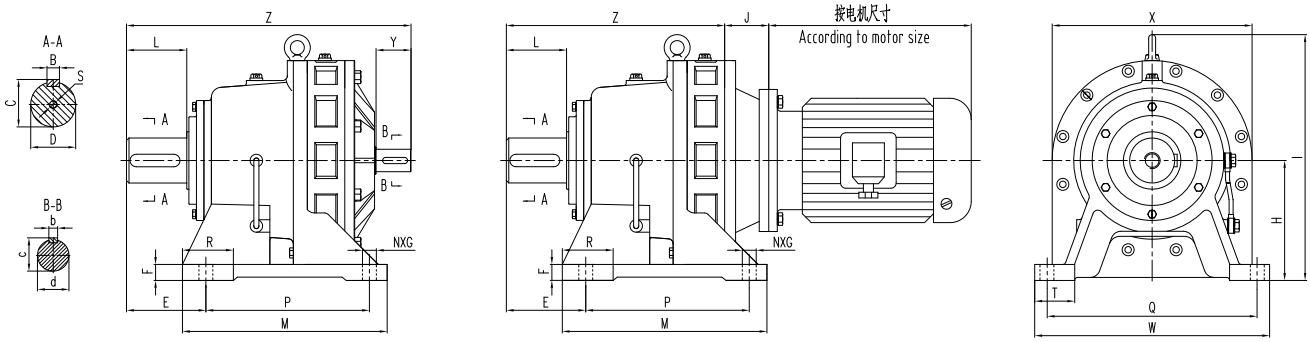

机型 Type	外形尺寸 Contour Dimensions							安装尺寸 Installation Dimensions										轴端尺寸 Size of Shaft End								重量 weight(kg)	
	M	W	Z		I	X	J	H	E	F	P	Q	R	S	T	N	G	B	C	D	L	b	C	d	y	BW	BWD 约
			BW	BWD																							
BW.BWD09-9																											
B09	100	144	192	142	155	140	详见第103 104页	80	47	12	76	120		M5	35	4	11	6	24.5	22	30	5	17	15	22	8.5	BW 重量+电动机重量
B0	120	185	214	165	190	168		100	93	15	90	150		M8	35	4	11	8	33	30	35	5	17	15	22	15	
B1	160	280	263	194	250	200		120	125	15	110	240		M10	55	4	13	10	38	35	56	6	21	18	35	22	
B2	200	320	320	246	296	240		140	144	20	150	280	65	M10	60	4	13	14	48.5	45	71	6	24.5	22	40	40	
B3	250	390	390	294	355	300		160	159	25	200	340	100	M12	75	4	17	16	59	55	80	8	33	30	55	73	
B4	380	400	479	370	430	340		200	155	25	320	340	150	M12	80	4	22	20	74.5	70	102	10	38	35	62	120	
B5	440	470	564	438	513	400		240	159	32	380	420		M16	80	4	22	25	95	90	120	14	48.5	45	70	185	
B6	520	560	668	528	605	500		280	199	35	440	500		M20	90	4	26	28	106	100	139	14	53.5	50	80	380	
B7	600	690	775	578	706	575		325	230	40	500	630		M24	105	6	26	28	116	110	150	16	59	55	90	580	
B8	810	880	1061	814	880	700		420	324	50	660	800		M30	160	6	32	32	137	130	202	20	74.5	70	120	1200	
B9	1040	1160	1462	1151	1160	1000		540	485	60	840	1050		M42	200	6	45	45	190	180	330	25	95	90	150	2500	
XW.XWD1-12																											
X1	120	180	197	147	175	140	.详见第103 104页	100	60	12	90	150		M5	35	4	12	8	28	25	35	5	17	15	22	8.5	XW 重量+电动机重量
X2	120	210	216	164	190	168		100	101	15	90	180		M8	45	4	12	8	28	25	34	5	17	15	22	15	
X3	150	290	263	194	270	200		140	151	20	100	250		M10	55	4	16	10	38	35	56	6	20.5	18	35	30	
X4	195	330	320	246	316	240		150	169	22	145	290		M10	65	4	16	14	49	45	74	6	24.5	22	40	43	
X5	260	410	401	305	356	300		160	206	25	150	370		M12	75	4	16	16	59	55	91	8	33	30	55	85	
X6	335	430	466	359	425	340		200	125	30	275	380		M12	75	4	22	18	69	65	89	10	38	35	62	125	
X7	380	470	484	377	484	340		220	145	30	320	420		M12	95	4	22	22	85	80	109	12	43	40	65	190	
X8	440	530	564	438	514	400		250	155	35	380	480		M16	120	4	22	25	95	90	120	14	48.5	45	70	240	
X9	560	620	691	528	614	500		290	186	40	480	560		M20	120	4	26	28	106	100	141	14	53.5	50	80	390	
X10	600	690	775	578	706	575		325	230	40	500	630		M24	105	6	26	28	116	110	150	16	59	55	90	580	
X11	810	880	1061	814	880	700		420	324	50	660	800		M30	160	6	32	32	137	130	202	20	74.5	70	120	1200	
X12	1040	1160	1462	1151	1160	1000		540	485	60	840	1050		M42	200	6	45	45	190	180	330	25	95	90	150	2500	

九.BL、BLD、XL、XLD型(单级)外形及安装尺寸
Model BL、BLD、XL、XLD (single reduction) contour and installation dimension

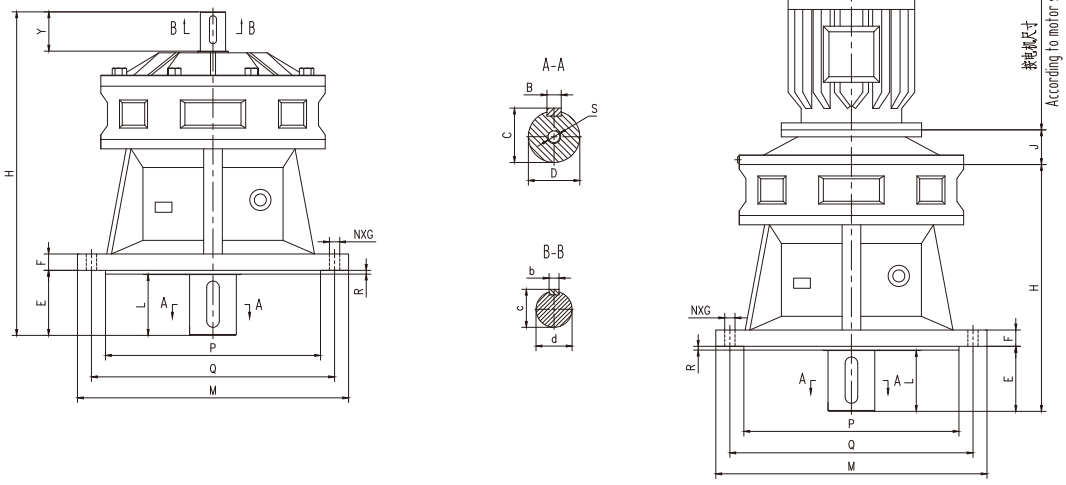

机型 Type	外形尺寸 Contour Dimensions				安装尺寸 Installation Dimensions								轴端尺寸 Size of Shaft End								重量 weight(kg)	
	H		M	J	E	F	G	N	P	Q	R	S	B	C	D	L	b	C	d	y	BW	BWD 约
	BL	BLD																				
BL BLD09-9																						
B09	192	142	160		35	10	11	4	110	134	3	M5	6	24.5	22	30	5	17	15	22	8	
B0	214	165	190		39	10	11	4	140	160	3	M8	8	33	30	35	5	17	15	22	15	
B1	263	194	230		61	12	11	6	170	200	4	M10	10	38	35	46	6	20.5	18	35	22	
B2	320	246	260	详见第	70	15	11	6	200	230	4	M10	14	48.5	45	61	6	24.5	22	40	43	BL 重量+电动机重量
B3	390	294	340		80	20	13	6	270	310	5	M12	16	59	55	74	8	33	30	55	79	
B4	477	370	400	103	100	22	15	8	320	360	5	M12	20	74.5	70	92	10	38	35	62	127	
B5	564	438	490	104	115	30	18	12	400	450	5	M16	25	95	90	108	14	48.5	45	70	200	
B6	668	528	580		139	35	22	12	460	520	8	M20	28	106	100	130	14	53.5	50	80	400	
B7	775	578	650		182	40	22	12	520	590	10	M24	28	116	110	142	16	59	55	90	620	
B8	1061	814	880		210	50	38	12	680	800	10	M30	32	137	130	202	20	74.5	70	120	1220	
B9	1462	1151	1160		370	60	39	8	900	1020	10	M42	45	190	180	330	25	95	90	150	2500	
XL XLD1-12																						
X1	197	147	160		48	9	12	4	110	134	3	M5	8	28	25	35	5	17	15	22	8.5	
X2	216	164	180		42	12	12	6	130	160	3	M8	8	28	25	34	6	17	15	22	15	
X3	263	194	230		51	15	12	6	170	200	4	M10	10	38	35	46	6	205	18	35	22	
X4	324	250	260		79	15	12	6	200	230	4	M10	14	48.5	45	63	6	24.5	22	40	43	
X5	401	305	340		93	20	12	6	270	310	4	M12	16	59	55	85	8	33	30	55	88	
X6	466	359	400		92	22	16	8	316	360	5	M12	18	69	65	80	10	38	35	62	130	
X7	484	377	430	103	114	22	18	8	345	390	5	M12	22	85	80	96	12	43	40	65	145	XL 重量+电动机重量
X8	564	438	490	104	115	30	18	12	400	450	6	M16	25	95	90	110	14	485	45	70	195	
X9	691	551	580		170	35	22	12	455	520	8	M20	28	106	100	132	14	53.5	50	80	395	
X10	775	578	650		182	40	22	12	520	590	10	M24	28	116	110	142	16	59	55	90	620	
X11	1061	814	880		210	50	38	12	680	800	10	M30	32	137	130	202	20	74.5	70	120	1220	
X12	1462	1151	1160		370	60	39	8	900	1020	10	M42	45	190	180	320	25	95	90	150	2500	

十.BWE、BWED、XWE、XWED型(双级)外形及安装尺寸
Model BW、BWED、XWE、XWED (double reduction) contour and installation dimension

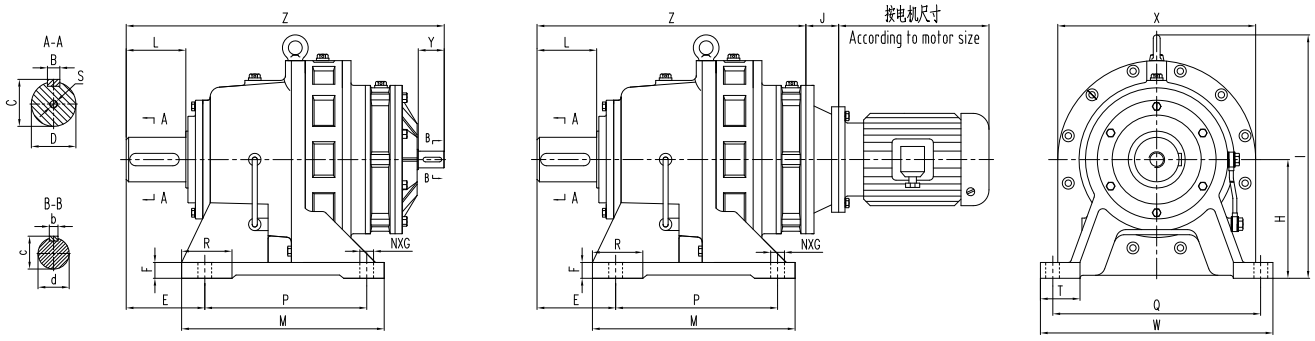

机型 Type	外形尺寸 Contour Dimensions							安装尺寸 Installation Dimensions										轴端尺寸 Size of Shaft End								重量 weight(kg)	
	M	W	Z		I	X	J	H	E	F	P	Q	R	S	T	N	G	B	C	D	L	b	c	d	y	BWE	BWED 约
			BWE	BWED																							
BWE BWED10-95号																											
B10	160	280	317	267	250	200	详见第103 104页	120	124	15	110	240		M10	55	4	13	10	38	35	56	5	17	15	22	43	45
B20	200	320	364	315	306	240		140	144	20	150	240		M10	60	4	13	14	48.5	45	71	5	17	15	22	50	BWE 重量+电动机重量
B31	250	390	446	376	356	300		160	159	25	200	340	65	M12	75	4	17	16	59	55	80	6	21	18	35	90	
B41	380	400	523	454	425	340		200	155	25	320	340	65	M12	80	4	22	20	74.5	70	102	6	20.5	18	35	140	
B42	380	400	554	479	425	340		200	155	25	320	340	100	M12	80	4	22	20	74.5	70	102	6	24.5	22	40	155	
B52	440	470	623	548	504	400		240	158	32	380	420		M16	80	4	22	25	95	90	120	6	24.5	22	40	240	
B53	440	470	657	561	504	400		240	158	32	380	420		M16	80	4	22	25	95	90	120	8	33	30	55	260	
B63	520	560	741	645	605	500		280	199	35	440	500		M20	90	4	26	28	106	100	139	8	33	30	55	460	
B74	600	690	832	725	706	575		325	230	40	500	630		M24	105	6	26	28	116	110	150	10	38	35	62	680	
B84	810	880	1071	962	880	700		420	324	50	660	800		M30	160	6	32	32	137	130	202	10	38	35	62	1320	
B85	810	880	1095	970	880	700		420	324	50	660	800		M30	160	6	32	32	137	130	202	14	48.5	45	70	1350	
B95	1040	1160	1502	1350	1160	1000		540	485	60	840	1050		M42	200	6	45	45	190	180	330	14	48.5	45	70	2750	
XWE XWED42-128号																											
X32	150	290	314	364	270	200	详见第103 104页	140	151	20	100	250		M10	55	4	16	10	38	35	56	5	17	15	22	40	XWE 重量+电动机重量
X42	195	330	370	315	316	240		150	169	22	145	290		M10	65	4	16	14	48.5	45	72	5	17	15	22	50	
X53	260	410	457	387	356	300		160	206	25	150	370		M12	75	4	16	16	59	55	91	6	205	18	35	110	
X63	335	430	510	441	425	340		200	125	30	275	380		M12	75	4	22	18	69	65	89	6	205	18	35	150	
X64	335	430	541	466	425	340		200	125	30	275	380		M12	75	4	22	18	69	65	89	6	24.5	22	40	160	
X74	380	470	561	486	484	340		220	145	30	320	420		M12	95	4	22	22	85	80	109	6	24.5	22	40	230	
X84	440	530	623	548	514	400		250	155	35	380	480		M16	120	4	22	25	95	90	120	6	24.5	22	40	260	
X85	440	530	682	586	514	400		250	155	35	380	480		M16	120	4	22	25	95	90	120	8	33	30	55	290	
X95	560	620	762	667	614	500		290	186	40	480	560		M20	120	4	26	28	106	100	141	8	33	30	55	470	
X106	600	690	832	725	706	575		325	230	40	500	630		M24	105	6	26	28	116	110	150	10	38	35	62	680	
X117	810	880	1071	962	880	700		420	324	50	660	800		M30	160	6	32	32	137	130	202	12	43	40	65	1320	
X118	810	880	1095	970	880	700		420	324	50	660	800		M30	160	6	32	32	137	130	202	14	49	45	70	1350	
X128	1040	1160	1445	1320	1160	1000		540	485	60	840	1050		M42	200	6	45	45	190	180	330	14	48.5	45	70	2750	

十一.BLE、BLED、XLE、XLED型(双级)外形及安装尺寸
Model BLE、BLED、XLE、XLED (double reduction) contour and installation dimension

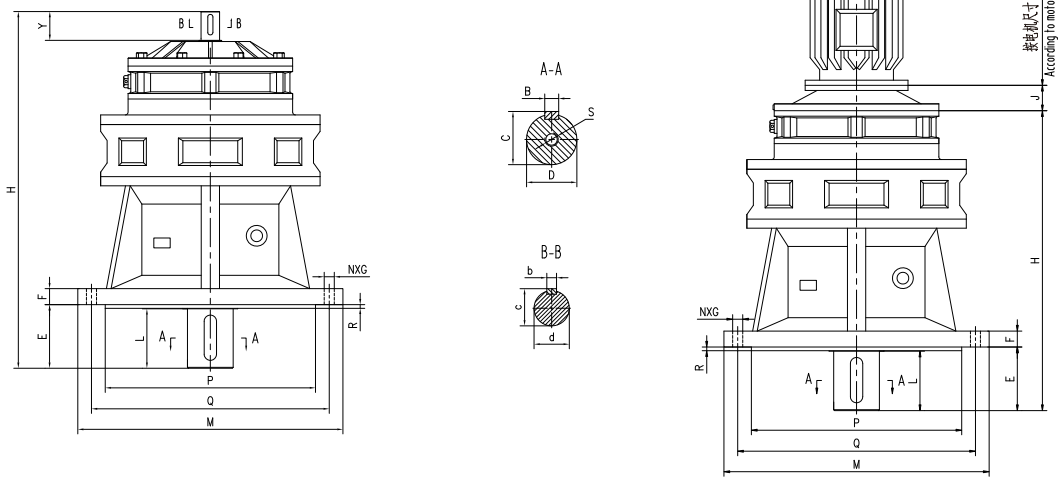

机型 Type	外形尺寸 Contour Dimensions				安装尺寸 Installation Dimensions								轴端尺寸 Size of Shaft End								重量 weight(kg)	
	H		M	J	E	F	G	N	P	Q	R	S	B	C	D	L	b	c	d	y	BLE	BLED 约
	BL	BLD																				
BLE、BLED10-95号																						
B10	317	267	230	详见第103 104页	61	12	11	6	170	200	4	M10	10	38.5	35	49	5	17	15	22	38	40
B20	368	318	260		70	15	11	6	200	230	4	M10	14	48.5	45	61	5	17	15	22	50	BLE重量+电动机重量
B31	446	376	340		80	20	13	6	270	310	5	M12	16	59	55	74	6	20.5	18	35	95	
B41	521	454	400		100	22	15	8	320	360	5	M12	20	74.5	70	92	6	20.5	18	35	145	
B42	554	479	400		100	22	15	8	320	360	5	M12	20	74.5	70	92	6	24.5	22	40	160	
B52	623	548	490		115	30	18	12	400	450	5	M16	25	95	90	108	6	24.5	22	40	240	
B53	657	561	490		115	30	18	12	400	450	5	M16	25	95	90	108	8	33	30	55	260	
B63	741	645	580		139	35	22	12	460	520	8	M20	28	106	100	130	8	33	30	55	460	
B74	832	725	650		182	40	22	12	520	590	10	M24	28	116	110	142	10	38	35	62	690	
B84	1071	962	880		210	50	38	12	680	800	10	M30	32	137	130	202	10	38	35	62	1340	
B85	1095	970	880		210	50	38	12	680	800	10	M30	32	137	130	202	14	48.5	45	70	1370	
B95	1502	1350	1160		370	60	39	8	900	1020	10	M42	45	190	180	330	14	48.5	45	70	2750	
XLE、XLED42-128号																						
X32	314	264	230	详见第103 104页	51	15	12	6	170	200	4	M10	10	38	35	46	5	17	15	22	38	XLE重量+电动机重量
X42	370	320	260		79	20	12	6	200	230	4	M10	14	48.5	45	63	5	17	15	22	50	
X53	457	389	340		93	22	12	6	270	310	4	M12	16	59	55	85	6	20.5	18	35	110	
X63	510	441	400		92	22	16	8	316	360	5	M12	18	69	65	80	6	20.5	18	35	155	
X64	541	466	400		92	22	16	8	316	360	5	M12	18	69	65	80	6	24.5	22	40	170	
X74	561	486	430		114	22	18	8	345	390	5	M16	22	85	80	96	6	24.5	22	40	230	
X84	623	548	490		115	30	18	12	400	450	6	M16	25	95	90	110	6	24.5	22	40	260	
X85	658	588	490		115	30	18	12	400	450	6	M16	25	95	90	110	8	33	30	55	280	
X95	762	667	580		170	35	22	12	455	520	8	M20	28	106	100	132	8	33	30	55	480	
X106	832	725	650		182	40	22	12	520	590	10	M24	28	116	110	142	10	38	35	62	690	
X117	1108	983	880		210	50	38	12	680	800	10	M30	32	137	130	202	12	43	40	65	1340	
X118	1095	970	880		210	50	38	12	680	800	10	M30	32	137	130	202	14	48.5	45	70	1370	
X128	1445	1320	1160		370	60	39	8	900	1020	10	M42	45	190	180	320	14	48.5	45	70	2750	

十二、选用说明 Procurement guide

1、由于本机为定转矩设计，故选型时请选用实际转矩应小于本机额定转矩，最大瞬时负荷或起动负荷应小于本机额定负荷的160%。
2、如果输入轴转速是变化的应根据使用条件，如果要求功率一定，则按最低转速所需功率选取；如要求扭矩一定，则按高速时所需的功率选取。
3、另外应考虑工作情况系数和功率损失，则应对工作扭矩（或功率）乘以工况系数K。
4、在可能出现过载现象的场合，应安装过载保护装置。以防减速机及其所配的各种原动力因传递大而导致损坏。

1. It is designed based on a constant torque, the refore, during type selection, actual working torque shall be less than the rated torque, and maximum instantaneous load or start load shall be less than 160% of the rated load.
2. If input spindle rotation speed is variable, it shall be in accordance with actual working conditions, if required power is constant, then the power shall satisfy the requirements of the lowest speed; if required torque is constant, then the power shall satisfy the requirements of the highest speed.
3. In addition, consider working coefficients and power loss, therefore, the working torque(or power)shall be multiplied by working coefficient K.
4. In conditions when overload is likely to occur, overload protection devices shall be installed, to avoid damages caused by the great transferred force from speed reducers and attached various power sources.

十三、工况系数表 Working coefficient table

动力源种类 Power source type	工作条件 Working conditions	负荷性质Load nature		
		稳定（I）Stable（I）	中等冲击(II) Medium impact(II)	较大冲击或惯性冲击（III） Strong impact or inertia impact（III）
电动机 Motor	间断工作3小时/日 Of starts per hour 3	0.8	0.8	1.4
	8-10小时/日 8-10hours/day	1.0	1.0	1.5
	连续工作24小时/日 Continuous 24 hours/day work	1.2	1.2	1.6

十四、减速机用途和载荷性质分类参数表 Table of purposes and load natures of speed reducer

用途Purposes		载荷分类
搅拌器 Agitators	纯液体Pure liquid	I
	液体和固体Liquid and soild	II
	液体（密度可变）Liquid（variable density）	
鼓风机 Blower	离心式Centrifugal type	I
	叶片式Blade type	
	叶轮式Impeller type	II
压气机 压缩机 Air compressor Compressor	离心式Centrifugal type	I
	叶轮式Impeller type	II
	往复式(多缸)Reciprocating type (multi-cylinder)	
	往复式(单缸)Reciprocating type (single-cylinder)	III
运输机（载荷稳定） Conveyer (Stable load)	板式 Plate type	I
	皮带式 Strap type	
	斗式Hopper type	
	链式 Chain type	
	螺旋式 Screw type	
运输机（重载荷非均匀送料） Conveyer (Heavyload, non-uniform material feeding)	板式 Cordially	II
	皮带式 Strap type	
	斗式Hopper type	
	链式 Chain type	
	往复式Reciprocating type	
	螺旋式 Screw type	
	振动式Vibration type	III

用途Purposes		载荷分类
*塑料挤出机 Plastic extruding machine	薄膜 Diaphragm	I
	棒材 Rods	
	管材 Pipes	
	吹塑机Plastic blowing machine	II
卷扬机（绞车） Winding machine (winding engine)	重型的 Heavy-duty	III
	中型的 Medium-duty	II
辊道 rolling path		III
碎皮机（矿石）Cracking machine（ores）		
锤式粉碎机 Hammer type pulverizing machine		
混凝土搅拌机 Concrete blending machine		II
石油工业	石胶压滤机Colloid pressure filtering machine	
	结晶品、冷冻器 Crystal products,condenser	
橡胶与塑料工业	*破机 *Pulverizing machine	III
	*混炼机 *Mixing refinery machine	
	*精炼机 *Refinery machine	II
	橡胶压延机 Rubber pressing machine	
纺织工业	织布机 **Weaving machine**	II
	梳棉（毛麻）机 **Carding machine**	
	轧布机 **Mangling machine**	
	纺纱机 **Spinning machine**	
	洗涤机 **Washing machine**	

十五、选择方式示例 Examples of selection

有搅拌器一台，只知道装入液体和固体材料混合搅拌，24小时工作，搅拌器转速32r/min，功率11kw，试问该如何选择减速机型号和电动机？

1.查载荷分类表知为II类　　2.查工况系数表为1.35

即确11 □ 1.35=14.85，即确定功率为15kw，电动机(4)级，转速32r/min，减速比为1400/32=43.75，即确定为减速比为43。

计算减速机应能承载的扭矩(N.m)=输入功率×9550/输出转速r/min □ 效率× 使用系数，
即15 □ 9550/32 □ 0.90 □ 1.35=5499.45 (N.m)，即取5499(N.m)
根据型号规格选型参数表造取
i:43，5499(N.m) 即X9＃15kw，5772(N.m)满足要求
则型号规格为XLD15-9-43，即为X9#立式摆线减速机，电机直连安装，功率15kw(4级)，速比43。

A blender, only that liquid and solid materials are input for blending is known, works continuously for 24 hours, rotation speed is 32r/min, power is 11kw, how to select the type of speed reducer and motor?

1. II type after checking load type table.　2. 1.35 after checking working coefficient table.
11×1.35=14.85, so power is 15kw, motor is of 4 stages, rotation speed is 32r/min, speed reduction ratio is 31/1400=43.75, therefore, speed reduction ratio is 43.

To calculate maximum torque allowed on speed reducer (N.m)= Input power 9550/output rotation speed r/min efficiency coefficient, that is 15× 9550/32× 0.90× 1.35=5499.45, taken as 5499(N.m).
According to table of types and parameters, take i:43, 5499(N.m), that is X9# 15kw, 5772(N.m), as per requirements.
Then type shall be XLD 15-9-43, that is X9# vertical cycloid speed reducer, with motor directly coupled, power is 15kw (4 stages), speed reduction ratio is 43.

十六、安装使用 Installation and usage

1. 本机可用于24小时连续工作制并允许正反转。
2. 单级减速机的输出轴与输入轴的转向相反，输出轴无自锁作用，在可能出现“倒转动”的场合下，应严格限制低速轴的轴速及转矩，以免发生机件损坏。
3. 在输出轴与输入轴和其他零件连接时，不允许采用直接锤击的方法。当使用三角皮带轮传动时，三角带不宜涨得太紧，以免损坏轴承；当使用链轮传动时，链条不能放得太松，否则起动时产生冲击力。
4. 输出轴与输入轴轴伸的平键按普通平键型式尺寸(GB1096-79)规定选用，轴径尺寸公差为h6。
5. 甲板式减速机要安装在没有振动，并且轴心线处于水平位置时。在必须倾斜使用时，轴心线的仰角不应超过15度。
6. 法兰式减速机安装时，输出轴必须垂直向下。
7. 除甲板式与法兰式以外的其他安装形式必须采取相应的润滑，另外还要考虑工作的温度范围，具体情况请与我厂联系。
8. 在冲击载荷较大，起动频繁工作时，机座与基础应自配定位销钉或选有液力联轴器安装。

1. The machine is available for continuous 24-hour work in a day; forward/reversed rotation is allowed.
2. To single-stage speed reducer, rotation direction of output spindle and rotation direction of input spindle shall be contrary, and no self-locking function on output spindle. In conditions when reversed rotation is likely to occur, please strictly limit rotation speed and torque of low-speed spindle, in order to avoid damages on parts.
3. When coupling output spindle or input spindle, with other parts, hammering is not allowed. When triangle strap is used in transmission, the triangle strap shall not be too tightened, in order to avoid damages on bearing; when chain wheel is used in transmission, the chain wheel shall not be loosened extraordinary, otherwise, the impacting will be caused during start.
4. Sizes of flat keys on output spindle or input spindle shall be in accordance with standard (GB1096-79) for common flat keys, and axial size tolerance is h6.
5. Plate type speed reducers shall be installed in an area without vibration and its axes shall be horizontal. When users have to use it in an inclined manner, the angle between axes and horizon shall not be more than 15 degrees.
6. Output spindles shall downward vertically when flanged speed reducers are installed.
7. Except plate type and flange type installation patterns, to all other installation patterns, lubrication is needed, and working temperature range also shall be considered, please contact with our company for details.
8. Locating pins, hydraulic shaft couplers are necessary for bases and foundations, when impacting load in great and starting is quite frequent

十七、润滑 Lubrication

1.润滑方式 Lubrication method:

	单级 Single-stage		双级 Double-stage		说明： (1) 油脂润滑时请采用二硫化钼1#或2L-2#锂基润滑油脂等。 (2) 在常温下选用40#或50#机械油也可以选用更好的70#或90#极压工业齿轮油。 Explanation: (1) Lubricating grease shall be molybdenum bisuifide 1# or2L-2# Lithium base lubricating grease,etc (2) In normal temperature,40# or50# machine oil are available,and 70# or 90# industrial gear oil is better.
卧式 Horizontal	×2	×(3-11)	×32-×42	×53-×117	
	油脂 Gresae	油浴式 Oil bath type	油脂 Grease	油浴式 Oil bath type	
立式 Vertical	×2-×4	×(5-11)	×32-×42	×53-×117	
	油脂 Grease	油液循环	油脂 Grease	油泵循环	

2. 本机在使用前必须注入润滑油，因为在出厂时为了便于装卸与运输一般不加润滑油，如是采用油脂润滑的出厂前已加好。

3. 油泵循环润滑方式，要注意开机前先启动油泵电机。视油泵是否供油。否则应将油泵电机接线换相，由于油泵是按指定方向运转的，还有油泵的过滤器要注意清洗以防堵塞。

4.换油制度：第一次加油运转一个月交换机油，并将内部油污冲净。以后可每隔3-6个月交换一次。如工作环境恶劣，尽可能缩短换油时间。如长期没有使用的减速机重新开机，必须先更换润滑油。

5. 卧式减速机油面高度尺寸如下：

2. Before starting, lubricating oil shall be added , for conveniences in loading and transportation during delivery, generally, lubricating oil is not added ,if lubricating grease is used, it will be added before delivery.

3. Oil pump cycling lubrication, start oil pump motor firstly before starting. Check whether oil pump supplies oil, if not, switch phases of oil pump motor, For the oil pump rotates in a specific direction, filter of oil pump shall be clean to avoid jamming.

4. Oil replacement rule: when oil is added for the first time, keep working for one month, and replace oil to clear off all oil dirt inside.
From then, replace oil every 3-6 months. If the working conditions are extremely unfavorable, reduce oil replacement period as much as possible. Replace lubricating oil when restart a speed reduced having not been used for a long time.

5.Oil level of horizontal speed reducer: oil level.

机型号 Type	×5	×6		×7	×8		×9	×10	×11
	×53	×63	×64	×74	×84	×85	×95	×106	×117
油面高度 Oil high	150	190	190	210	240	240	275	315	410

十八、维护保养 Maintenance

一、拆卸 Disassembly

1.拆卸前要先放净润滑油，立式减速机须先拆除油泵。拆装顺序见图。

2.拆卸钱首先松开联接螺栓，分解3、17，然后依次分解11、12、9、10、13等零件。装配时则顺序相反。

3.对直联型进行分解时，严格按要求顺序进行，切禁先从电动机法兰处分解。

1.Drain lubricating oil completely before disassembly, to vertical speed reducers, disassemble oil pumps. Disassembly sequence is shown in the diagram.

2.Before disassembly, firstly loosen coupling bolts,then disassemble part 3,17,then part 11,12,9,10,13 etc, in sequence.Assembly is in the reversed sequence.

3.Disassembly of directly coupled speed reducers shall be strictly in accordance with required sequence, and it is forbidden to start disassembling from the flange area firstly.

二、装配 Assembly

装配时请注意一下各项：During assembly, please pay attention to following：

1.装配前将全部零件清洗干净；

2.对滚动及滑动表面涂润滑油，以形成初步润滑条件；

3.两片摆线轮的标记、字头必须180度对称，并字头向上；

4.注意调整橡胶油封中弹簧的松紧，并涂抹油脂；

5.装配结束后装入润滑油或润滑脂，卧式油位达到高度，立式油位达到油标中线

6.用手转动高速轴，经检查无故障即可开空车运转。对立式减速机应检查油泵工作情况是否良好，若均正常方可使用。

1.Clean all parts completely before assembly

2.Smear lubricating oil onto rolling and sliding surfaces for primary lubrication;

3.Two C marks on cycloid wheel ,with head 180 degrees in symmetry and upright;

4.Adjust tightness of spring in rubber oil seal , and smear grease

5.After assembly, add lubricating oil or lubricating grease, to horizontal types, oil level shall reach the specific height, to vertical types, oil level shall in the middle of oil level scale

6.Rotate high-speed spindle by hands, check, when everything is all right ,users can start commissioning without load. To vertical speed reducers, please check whether oil pump works normally, and start to use when everything is all right .

十九、配Y系列电机时联接法兰尺寸图表

电机接盘型

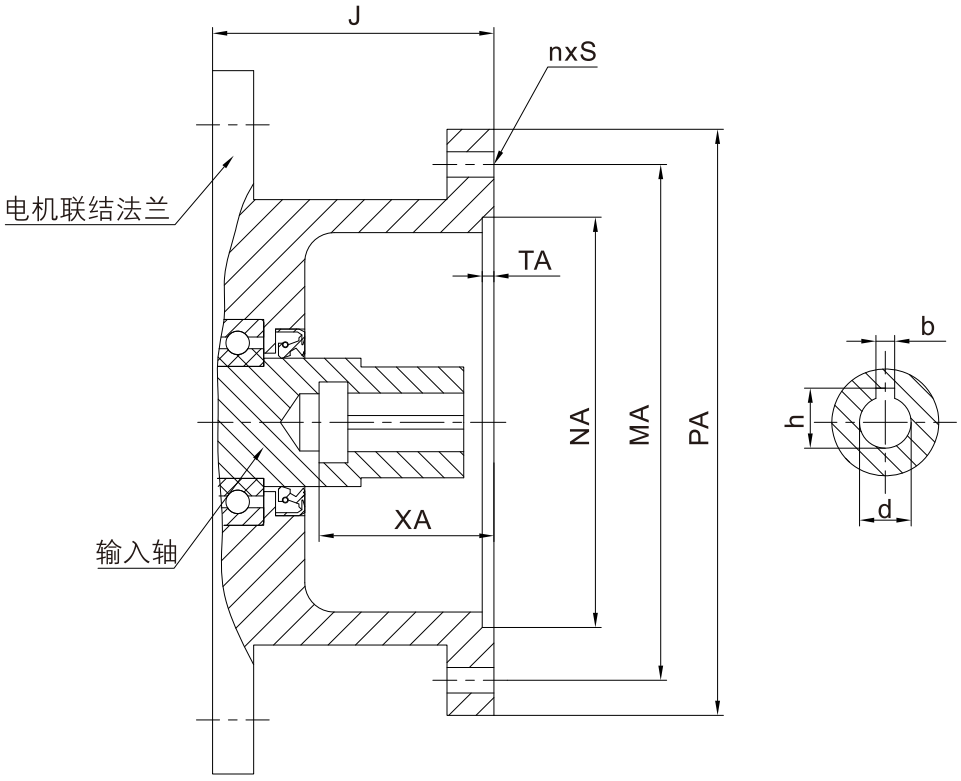

机型	电机			尺寸									
	Kw	机座号	极数	NA	MA	PA	J	TA	n x S	XA	d	b	h
B09	0.18	Y63	4P	95	115	140	57.5	4	4xM 8	23	11	4	12.8
	0.25、0.37	Y71		110	130	160	74.5	4	4xM 8	30	14	5	16.3
	0.55	Y801		130	165	200	74.5	4	4xM 10	40	19	6	21.8
B0 B10 B20	0.18	Y63		95	115	140	54.5	4	4xM 8	23	11	4	12.8
	0.25、0.37	Y71		110	130	160	74.5	4	4xM 8	30	14	5	16.3
	0.55、0.75	Y80		130	165	200	74.5	4	4xM 10	40	19	6	21.8
	1.1	Y90S		130	165	200	83.5	4	4xM 10	50	24	8	27.3
B1 B31 B41	0.25、0.37	Y71		110	130	160	83.5	4	4xM 8	30	14	5	16.3
	0.55. 0.75	Y80		130	165	200	83.5	4	4xM 10	40	19	6	21.8
	1.1、1.5	Y90		130	165	200	83.5	4	4xM 10	50	24	8	27.3
	2.2	Y100L1		180	215	250	90.5	4.5	4xM 12	60	28	8	31.3
B2 B42 B52	0.55、0.75	Y80		130	165	200	93.5	5	4xM 10	40	19	6	21.8
	1.1、1.5	Y90		130	165	200	93.5	5	4xM 10	50	24	8	27.3
	2.2、3	Y100L		180	215	250	93.5	5	4xM 12	60	28	8	31.3
	4	Y112M		180	215	250	93.5	5	4xM 12	60	28	8	31.3

机型	电机			尺寸									
	Kw	机座号	极数	NA	MA	PA	J	TA	n x S	XA	d	b	h
B3 B53 B63	0.55 0.75	Y80		130	165	200	118	5	4xM 10	40	19	6	21.8
	1.1 1.5	Y90		130	165	200	118	5	4xM 10	50	24	8	27.3
	2.2 3	Y100L		180	215	250	118	5	4xM 12	60	28	8	31.3
	4	Y112M		180	215	250	118	5	4xM 12	60	28	8	31.3
	5.5 7.5	Y132		230	265	300	118	5	4xM 12	80	38	10	41.3
	11	Y160M		250	300	350	151	5	4xM 16	110	42	12	45.3
B4 B74 B84	2.2 3	Y100L		180	215	250	125	5	4xM 12	60	28	8	31.3
	4	Y112M		180	215	250	125	5	4xM 12	60	28	8	31.3
	5.5 7.5	Y132	4P	230	265	300	125	5	4xM 12	80	38	10	41.3
	11	Y160M		250	300	350	151	5	4xM 16	110	42	12	45.3
B5 B85 B95	2.2 3	Y100L		180	215	250	142	6	4xM 12	60	28	8	31.3
	4	Y112M		180	215	250	142	6	4xM 12	60	28	8	31.3
	5.5 7.5	Y132		230	265	300	142	6	4xM 12	80	38	10	41.3
	11 15	Y160M		250	300	350	142	6	4xM 16	110	42	12	45.3
	18.5	Y180M		250	300	350	142	6	4xM 16	110	48	14	51.8
B6	5.5 7.5	Y132		230	265	300	144	6	4xM 12	80	38	10	41.3
	11 15	Y160		250	300	350	144	6	4xM 16	110	42	12	45.3
	18.5 22	Y200L	6P	300	350	400	144	6	4xM 16	110	55	16	59.3
B7	11 15	Y160	4P	250	300	350	129	7	4xM 16	110	42	12	45.3
	18.5 22	Y200L		300	350	400	129	7	4xM 16	110	55	16	59.3
	30	Y225M		350	400	450	161	7	8xM 16	140	60	18	64.4
	37	Y250M		450	500	550	161	7	8xM 16	140	65	18	69.4
B8	18.5 22	Y200L		300	350	400	204	7	4xM 16	110	55	16	59.3
	30	Y225M		350	400	450	234	7	8xM 16	140	60	18	64.4
	37	Y250M		450	500	550	234	7	8xM 16	140	65	18	69.4
	45 55	Y280		450	500	550	234	7	8xM 16	140	75	20	79.9
B9	30	Y225M		350	400	450	236	7	8xM 16	140	60	18	64.4
	37	Y250M		450	500	550	236	7	8xM 16	140	65	18	69.4
	45 55	Y280		450	500	550	236	7	8xM 16	140	75	20	79.9
	75	Y315S		550	600	660	266	7	8xM 20	170	80	22	85.4

注:配置其他系列电机时尺寸可能有所变动

减(变)速机订货须知

1、主机名称:____
2、减速机在主机中的作用____
3、使用环境条件:温度____ 摄氏度
4、每天运转时间____
5、电机类型 ____功率____千瓦;电压____伏特;输入转速____转/分;频率____赫兹
6、传动比____;输出轴转速____转/分
7、减速机所承受载荷(转矩)____N.m
8、减速机型号规格(按型号表示示例填写)_____
9、减速机与电动机连接方式_____
10、所需台数_____,希望供货时间____年____月____日
11、用户在订货时,双方需要签定全国同一格式文本合同,签定生效后,双方务必按《中华人民共和国合同法》中有关条款规定执行。
12、在签定合司前,必须详细阅读了解本书中的各产品性能,使用范围特点,各种机型的型号表示方法,包括机型号安装方式、是否带电机、减速比、电机功率、扭矩力等相关内容。直接配电机的产品,除注明电机功率外,还要务必注明机种类,相数(电机)极数(转数)如没有注明一律按三相四极交流电机出厂。
13、用户在订货时尽量选取我公司的型号、规格、如特殊减速比、变速比、特殊电机可特殊订货,我分司可为用户特殊设计制造。
14、本书所例的各项技术数据及其他,可供用户参考使用,如有技术改进,恕不另行通知。
注:a、选择带无级变速器的机型,为充分显示本机型的优良特性,常用转速应选择在变速范围中间值。
b、订货时请尽量选择本目录内的标准产品,如有特殊要求请在合同上详细说明。

Notices in speed reducer (speed changer)procurement

1、Main unit name:_____
2、Purpose of speed reducer in main unit
3、Operating conditions:Temperature___℃
4、Working time every day_____.
5、Motor type____ ; Power ____ KW; Voltage____V;Input rotating speed____r/min;Frequency____HZ
6、Transmission ratio____;Output spindle rotation speed____r/min
7、Maximum(torque)load allowed on speed reducer____N.m
8、Type of speed reducer (fill in types as specified)_____
9、Coupling method between speed reducer and motor_____
10、Quantity required_____.Expeced delivery date___year____month____day.
11、When a user places an order,the two parties shall sign a national uniform-pattern contract,which comes into effect after being signed,and the two parties shall implement according to relevant provisions in Contract Law of the People's Republic of China.
12、Before signing a contract,please read all technical parameters,application range and expression of types,including installation patterns,motors attached or not,speed reduction ratio,motor power,torque and so on,To products directly coupled with motors, besides motor power,motor type,phase number(motor) and stage number (rotation number) shall be specified,otherwise,we will provide 3-phase& 4-stage AC motors for all.
13、Users shall try to select the types manufactured by our company,Special orders are available for special speed reduction ratio, transmisson ratio and motors,and our company can design and manufacture for users.
14、All technical parameters and other information in this document ate for users'reference ,and we will not otherwise when any technical improvements ate made.

Note: a. When selecting the machine model with stepless speed variator,in order to fully represent the escellent properties of this model of machine,generally,the rotary speed shall be the middle calue within the speed cariation range.
b. When ordering,please try to select the standard products in the catalogue. If there is any special requirement, please notify it in the contract.

备忘录

浙江午马传动有限公司
ZHEJIANG WUMA DRIVE CO.,LTD.

地址/Add:
浙江省丽水市青田县东源镇项村工业区10号
No. 10, Xiangcun Industrial Zone, Dongyuan Town,
Qingtian County, Lishui City, Zhejiang, China
323900

销售部/Domestic Sales Department:
0578-6933687/0578-6933677
外贸部/Foreign Trade Department:
0577-56782096

E-mail: wuma@zjwuma.com
zjwuma@zjwuma.com

www.zjwuma.com
www.wumadrive.com