WUMA

Modular Helical Gearbox Selection Catalogue

2026E

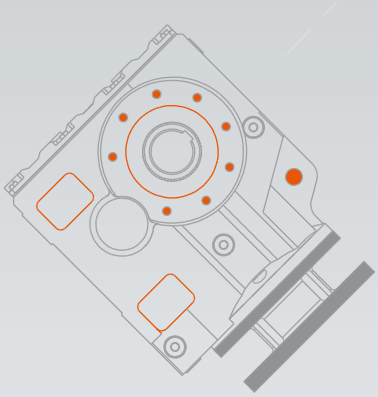

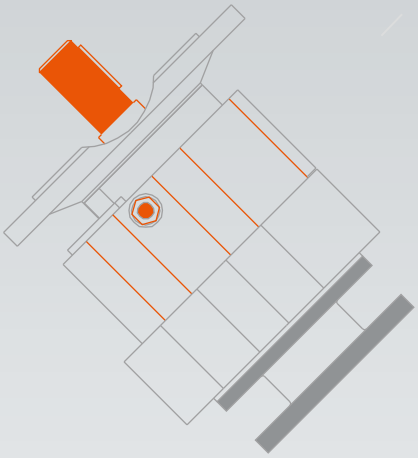

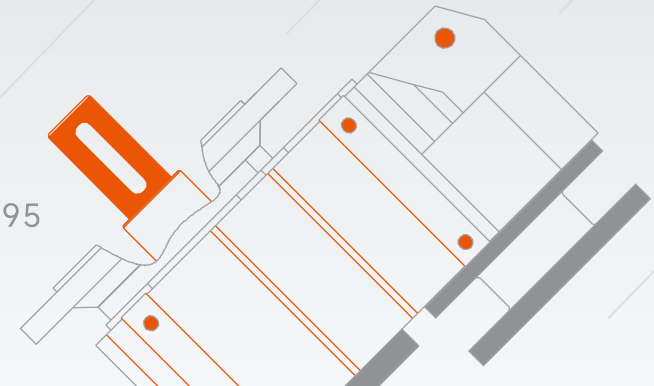

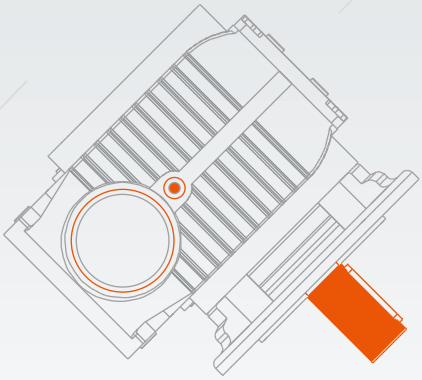

SINCE 1995

RELIABLE MOTION

SMARTER FUTURE



Area	60,000㎡
Experience	30+
Technicians	30+
Employees	300+
Annual Output Units	800,000

ZHEJIANG WUMA DRIVE CO.,LTD., formerly known as ZHEJIANG WUMA REDUCER CO., LTD., traces its business development back to 1995;

After over three decades of development, the company has grown into a professional manufacturer specializing in the field of reducers and precision transmissions. In 2021, the company underwent a major transformation, establishing ZHEJIANG WUMA DRIVE CO.,LTD. It continues to develop under the "WUMA" brand, marking a new stage in its journey towards intelligent manufacturing and high-quality growth.

Currently, the company employs over 300 staff members and occupies a production area of 60,000 square meters, with an annual output of over 500,000 various types of reducers. Focusing on the needs of industrial transmission applications, the company has established a serialized and modular product system centered around the RV series worm gear reducers, R/K/F/S series hardened tooth surface helical gear reducers, and hypoid reducers, among other products. With over 10 product series and thousands of specifications and models, the company serves a wide range of industries including food packaging, environmental protection equipment, warehousing and logistics, and intelligent manufacturing.

Relying on a digital manufacturing system, precision machining capabilities, and a comprehensive quality management system, the company continuously enhances its full-chain brand service capabilities. With over 25 years of deep exploration in overseas markets, its products are exported to 80 countries worldwide. Centered around the "1+N" business model of China Digital Manufacturing Center + Global Modular Assembly Center, the company has built a globally collaborative manufacturing and delivery network, transitioning from product export to brand export. Looking ahead, Wuma will continue to deepen technological innovation and intelligent manufacturing upgrades, empowering efficient production with reliable transmission, and striving to build a first-class Chinese reducer export enterprise and a first-class Chinese reducer brand - Reliable Transmission, intelligently ushering in the future.







MISSION

Reliable motion, smarter future

VISION

To be the global leader in intelligent drive solutions.

VALUES

Win-win Together　　Mutual Trust

Ultimate Excellence　　Accountability



Wuma Drive's intelligent digital workshop takes Industry 4.0 technology as its core and builds an efficient, precise and environmentally friendly modern production system. The workshop uses a highly automated production line, integrates AGV unmanned handling systems, DMG and Mazak precision processing equipment, and realizes intelligent production from raw materials to finished products. It also collects equipment status and process data in real time through IoT sensors, and combines PLM and MES system integration to achieve dynamic optimization of production scheduling, thereby shortening the production line switching time by 40% and reducing the quality defect rate by 30%

DMG Helical gearbox housings	**LG-MAZAK** housing processing
MITSUBUSHI Finish hobbing (gears)	**TSUGAMI** Finish turning (inner bore and end face of gears)
HEADMAN Finish turning (worm wheels)	**TOMAN** Finish hobbing (worm wheels)



Smart Workshop











QUALITY









Digital Factory



Content

1 Product overview

1.1 Performance characteristics P01
1.2 Working conditions P01

2 Selection Description

2. 1 Service Factor P01

3 Adapters dimensions

3.1 Adapters for mounting IEC B5 motors P05
3.2 Adapters for mounting IEC B14 motors P11
3.3 Adapters for mounting servo motors P16
3.4 AD input shaft

4 Motor dimension sheets

4. 1 Standard B5 motor.. dimension sheets P23
4.2 Direct-connected motor..dimemsions P24

5 WMR Series

5.1 WMR Product Features P27
5.2 WMR Product Structure P28
5.3 Product Disassembly Graph P29
5.4 WMR 37,47,67,57,77,87,97,MR107 Ratio Match Table P30
5.5 WMR Data Sheet P38
5.6 WMR Dimensions P55
5.7 Mounting and lubricant volume P64

6 MKA Series

6.1 MKA Product Features P65
6.2 MKA Product Structure P66
6.3 Product Disassembly Graph P67
6.4 MKA37,47,67,77,87,97,107, 127 Ratio Match Table P68
6.5 MKA Data Sheet P76
6.6 MKA Dimensions P92
6.7 Mounting and lubricant volume P108

7 MFA Series

7.1 MFA Product Features P111
7.2 MFA Product Structure P112
7.3 Product Disassembly Graph P113
7.4 MFA 37,47,67,77,87,97 Ratio Match Table P114
7.5 MFA Data Sheet P120
7.6 MFA Dimensions P129
7.7 Mounting and lubricant volume P141

1.Product Overview

The helical gearbox series produced by Zhejiang Wuma Drive Co., Ltd. includes: WR series inline helical gearbox, WK series helical bevel gearbox, WF series parallel shaft helical gearbox, WS series helical-worm gearbox. The entire series of products is manufactured in strict compliance with ISO international standards to meet the transmission solution needs of different industries.

1.1 Advanced gear reducer performance features

- **High Transmission Efficiency & Precision**
  The hard-tooth surface grinding process ensures Grade 6 precision, with single-stage efficiency exceeding 96%, guaranteeing stable power output for precision transmission.
- **Modular Optimized Design**
  Wuma's gearbox are optimized based on a modular combination system, enabling easy integration with various motor types or alternative power inputs. Multiple motor power options are available for a single frame size, facilitating flexible unit combinations.
- **Exceptional Torque Load Capacity**
  Optimized gear meshing profile delivers strong impact load resistance and superior instantaneous overload capacity.
- **Low Noise & Vibration Control**
  Precision grinding, tooth profile modification, and high-rigidity housing minimize operational noise, making it suitable for clean environments.
- **Extended Service Life & Easy Maintenance**
  Gears are made of low-carbon alloy steel with carburizing and quenching processes. Gear surface hardness: HRC 58–62; core hardness: HRC 33–40.Standard Protection: IP54/IP55 rating, ensuring excellent dust and water resistance.
  Oil Lubrication: Extended service life with efficient lubrication.
- **Ratios**
  Finely segmented ratio ranges. Combined units achieve larger ratios for lower output speeds.
- **Multiple Mounting Options**
  Horizontal and flange-mounted configurations, among others.

1.2 Working Conditions

- Ambient temperature -40℃~50℃. (When starting below 0℃, the lubricating oil must be heated to above 0℃.)
- The altitude does not exceed 1000 meters.
- The input speed is not more than 1800rpm, and the maximum circumferential speed of the gear does not exceed 22m/s.
- It can be used for forward and reverse operation.
- There is no industry restriction.
- Please contact our technical department for use under other conditions.

2. Selection Description

Wuma's helical gearbox are designed for stable loads, certain daily working hours and a small number of starts and stops. However, in actual use, this ideal condition is often not met. Therefore, the working machine coefficient f1, prime mover coefficient f2, starting coefficient f3, and reducer importance coefficient f4 must be determined according to the actual load type, operating time, and starting frequency. Use a use coefficient fB that is less than or equal to the use coefficient fB listed in the selection table, that is, f1 x f2 x f3x f4≤fB. Or multiply the torque required by the working machine by the use coefficient (f1 x f2 x f3 x f4) should be less than or equal to the allowable torque of the gearmotor.

That is,Ma≥Md x f1 x f2 x f3 x f4

f1: working machine coefficient (see Table 1)
f2: prime mover coefficient (see Table 2)
f3: starting coefficient (see Table 3)
F4: reducer importance coefficient (see Table 4)
Md: working machine required torque
Ma: reduced motor allowable torque

f1 Factor for driven machine

Table1

Driven machines		The day work hours		
		=0.5h	0.5-10h	>10h
Waste water treatment	Thickeners（central drive)	-	-	1.2
	Fitter presses	1.0	1.3	1.5
	Flocculation apparata	0.8	1.0	1.3
	Aerators	-	1.8	2.0
	Raking equipment	1.0	1.2	1.3
	Combined longitudinal and rotary rakes	1.0	1.3	1.5
	Pre-thickeners	-	1.1	1.3
	Screw pumps	-	1.3	1.5
	Water turbines	-	-	2.0
	Centrifugal pumps	1.0	1.2	1.3
	1 piston positive-displacement pumps	1.3	1.4	1.8
	>1 piston positive displacement pumps	1.2	1.4	1.5
Dredgers	Bucker conveyors	-	1.6	1.6
	Dumping devices	-	1.3	1.5
	Carterpillar travelling gears	1.2	1.6	1.8
	Bucket wheel excavators as pick-up	-	1.7	1.7
	Bucket wheel excavators for primitive material	-	2.2	2.2
	Cutterheads	-	2.2	2.2
	Travelling gears*		1.4	1.8
Plate bending machines		-	1.0	1.0
Chemical industry	Extruders	-	-	1.6
	Dough mills	-	1.8	1.8
	Rubber calenders	-	1.5	1.5
	Cooling drums	-	1.3	1.4
	Mixers for uniform media	1.0	1.3	1.4
	Mixers for non-uniform media	1.4	1.6	1.7
	Agitators for media with uniform density	1.0	1.3	1.5
	Agitators for media with non uniform density	1.2	1.4	1.6
	Agitators for media with non uniform gas absorption	1.4	1.6	1.8
	Toasters	1.0	1.3	1.5
	Centrifuges	1.0	1.2	1.3
Cranes	Slewing gears	2.5	2.5	3.0
	Luffing gears	2.5	2.5	3.0
	Travelling gears	2.5	2.5	3.0
	Hoisting gears	2.5	2.5	3.0
	Derricking jib cranes	2.5	2.5	3.0
Metalworking mills	Plate titers	1.0	1.0	1.2
	Ingot pushers	1.0	1.2	1.2
	Winding machines	-	1.6	1.6
	Cooling bed transfer frames	-	1.5	1.5
	Roller straighteners	-	1.6	1.6

f1 Factor for driven machine

Table1

Driven machines		The day work hours		
		≤0.5h	0.5-10h	>10h
Metalworking mills	Roller tables continuous	-	1.5	1.5
	Roller tables intermittent	-	2.0	2.0
	Roller tables Reversing tubemills	-	1.8	1.8
	Shears continuous*	-	1.5	1.5
	Shears crank type*	1.0	1.0	1.0
	Continuous casting drivers	-	1.4	1.4
	Reversing blooming mills	-	2.5	2.5
	Reversing slabbing mills	-	2.5	2.5
	Reversing wire mills	-	1.8	1.8
	Reversing sheet mills	-	2.0	2.0
	Reversing plate mills	-	1.8	1.8
	Roll adjustment drives	0.9	1.0	-
Conveyors	Bucket conveyors	-	1.2	1.5
	Hauling winches	1.4	1.6	1.6
	Hoists		1.5	1.8
	Belt conveyors<150kw	1.0	1.2	1.3
	Belt conveyors=150kw	1.1	1.3	1.5
	Goods lifts*	-	1.2	1.5
	Passenger lifts*		1.5	1.8
	Apron conveyors	-	1.2	1.5
	Escalators		1.2	1.4
	Rail travelling gears	-	1.5	-
Frequency converters		-	1.8	2.0
Reciprocating compressors		-	1.8	1.9
Cooling towers	Cooling towerfans	-	-	2.0
	Blowers (axialandradial)	-	1.4	1.5
Cane sugar production	Caneknives*	-	-	1.7
	Canemills	-	-	1.7
Beetsugar production	Beetcossettesmacerators	-	-	1.2
	Extractian plants，Mechanical refrigerator，juice boilers	-	-	1.4
	Sugar beet washing machines	-	-	1.5
	Sugar beet cutters	-	-	1.5
Papermachines	Of all-kind**	-	1.8	2.0
	Pulperdrives	2.0	2.0	2.0
Cableways	Centrifugal compressors	-	1.4	1.5
	Material ropeways	-	1.3	1.4
	To-and fro system aerial ropeways	-	1.6	1.8
	T-barlifts	-	1.3	1.4
	Continuous ropeways	-	1.4	1.6
Cement industry	Concrete mixers	-	1.5	1.5
	Breakers*	-	1.2	1.4
	Rotary kilns	-	-	2.0
	Tubemills	-	-	2.0
	Separators	-	1.6	1.6
	Roll crushers	-	-	2.0

f2 Factor forprime mover

Table2

Electric motos,hydra-ulic motors,turbines	1.0
Piston engines 4-6 cylinders	1.25
Piston engines 1-3 cylinders	1.5

f3 Start factor

Table3

f3 / f1 / Number of starts per hour	1	1.25-1.75	2-2.75	≥3
≤5	1	1	1	1
6-25	1.2	1.12	1.06	1
26-60	1.3	1.2	1.12	1.06
61-180	1.5	1.3	1.2	1.12
>180	1.7	1.5	1.3	1.2

f4 Reducer importance coefficient

Table4

f4	Importance and safety requirements
1~1.2	Failure of the reducer causes only single-machine shutdown with easy spare parts replacement.
1.2~1.4	Important equipment, reducer failure causes the unit, production line or the entire plant to stop production.
1.4~1.6	High safety requirements:The failre of the reducer can cause equipmet and personal accidents

Note:

1. Allowable radial load and axial load on the shaft
2. For information on the allowable radial load and axial load on the output shaft, please contact our technical department.
3. For the use and maintenance of the reducer, please refer to the "Instructions for Use of Reducer and Variable Speed Drive" that comes with the reducer.

3. Adapters dimensions

3.1 Adapters for mounting IEC B5 motors

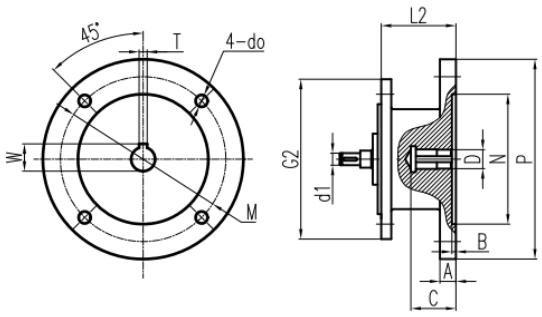

63B5~200B5

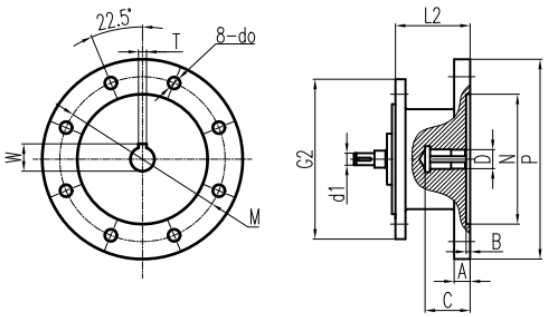

225B5~315B5

Model	B5 size	L2	N	M	P	do	A	B	≥C	D	T	W
R17	63B5	61.5	Φ95	Φ115	Φ140	Φ10	14	4	≥24	Φ11	4	12.8
	71B5	61.5	Φ110	Φ130	Φ160	Φ10	11	4	≥31	Φ14	5	16.3
	80B5	80	Φ130	Φ160	Φ200	Φ12	12	4	≥41	Φ19	6	21.9
R27 R37	63B5	61.5	Φ95	Φ115	Φ140	Φ10	14	4	≥24	Φ11	4	12.8
	71B5	61.5	Φ110	Φ130	Φ160	Φ10	11	4	≥31	Φ14	5	16.3
	80B5	80	Φ130	Φ160	Φ200	Φ12	12	4	≥41	Φ19	6	21.9
	90B5	80	Φ130	Φ160	Φ200	Φ12	12	4	≥51	Φ24	8	27.3
	100B5	98	Φ180	Φ215	Φ250	Φ14	17	4.5	≥61	Φ28	8	31.3
R51 R61 R47 R57 R67	63B5	56	Φ95	Φ115	Φ140	Φ10	14	4	≥24	Φ11	4	12.8
	71B5	56	Φ110	Φ130	Φ160	Φ10	13	4	≥31	Φ14	5	16.3
	80B5	74.5	Φ130	Φ160	Φ200	Φ12	15	4	≥41	Φ19	6	21.9
	90B5	74.5	Φ130	Φ160	Φ200	Φ12	15	4	≥51	Φ24	8	27.3
	100B5	90.5	Φ180	Φ215	Φ250	Φ14	17	4.5	≥61	Φ28	8	31.3
	112B5	90.5	Φ180	Φ215	Φ250	Φ14	17	4.5	≥81	Φ28	8	31.3
	132B5	123	Φ230	Φ265	Φ300	Φ14	18	6	≥111	Φ38	10	41.3
R71 R77	63B5	50	Φ95	Φ115	Φ140	Φ10	14	4	≥24	Φ11	4	12.8
	71B5	50	Φ110	Φ130	Φ160	Φ10	10	4	≥31	Φ14	5	16.3
	80B5	68.5	Φ130	Φ160	Φ200	Φ12	16	4	≥41	Φ19	6	21.9
	90B5	68.5	Φ130	Φ160	Φ200	Φ12	16	4	≥51	Φ24	8	27.3
	100B5	82.5	Φ180	Φ215	Φ250	Φ15	17	4.5	≥61	Φ28	8	31.3
	112B5	82.5	Φ180	Φ215	Φ250	Φ15	17	4.5	≥81	Φ28	8	31.3
	132B5	111	Φ230	Φ265	Φ300	Φ15	17	6	≥111	Φ38	10	41.3
	160B5	152.5	Φ250	Φ300	Φ350	Φ19	24	6	≥111	Φ42	12	45.3
R81 R87	80B5	63.5	Φ130	Φ160	Φ200	Φ12	16	4	≥41	Φ19	6	21.9
	90B5	63.5	Φ130	Φ160	Φ200	Φ12	18	4	≥51	Φ24	8	27.3
	100B5	78.5	Φ180	Φ215	Φ250	Φ15	18	4.5	≥61	Φ28	8	31.3
	112B5	106	Φ180	Φ215	Φ250	Φ15	18	4.5	≥81	Φ28	8	31.3
	132B5	106	Φ230	Φ265	Φ300	Φ15	20	6	≥111	Φ38	10	41.3
	160B5	147.5	Φ250	Φ300	Φ350	Φ19	23	6	≥111	Φ42	12	45.3
	180B5	147.5	Φ250	Φ300	Φ350	Φ19	23	6	≥111	Φ48	14	51.8

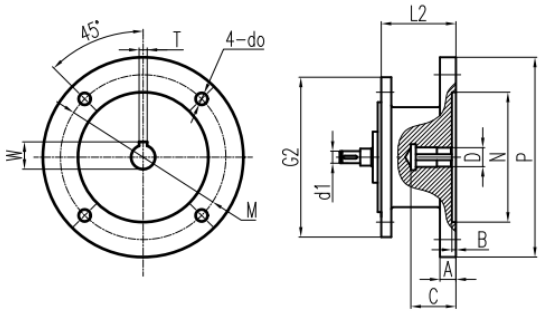

63B5~200B5

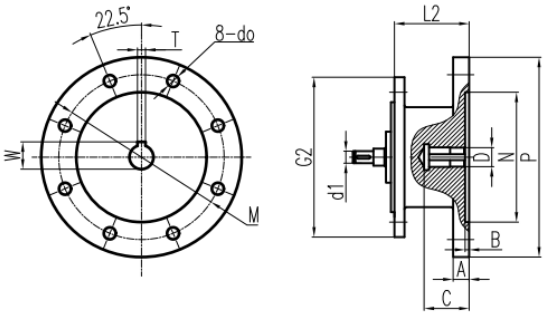

225B5~315B5

Model	B5 size	L2	N	M	P	do	A	B	≥C	D	T	W
R91 R97	80B5	54.5	Φ130	Φ160	Φ200	Φ12	13	4	≥41	Φ19	6	21.9
	90B5	54.5	Φ130	Φ160	Φ200	Φ12	13	4	≥51	Φ24	8	27.3
	100B5	72.5	Φ180	Φ215	Φ250	Φ15	14	4.5	≥61	Φ28	8	31.3
	112B5	72.5	Φ180	Φ215	Φ250	Φ15	14	4.5	≥81	Φ28	8	31.3
	132B5	101	Φ230	Φ265	Φ300	Φ15	18	6	≥111	Φ38	10	41.3
	160B5	142.5	Φ250	Φ300	Φ350	Φ19	23	6	≥111	Φ42	12	45.3
	180B5	142.5	Φ250	Φ300	Φ350	Φ19	23	6	≥111	Φ48	14	51.8
	200B5	174.5	Φ300	Φ350	Φ400	Φ19	26	6	≥111	Φ55	16	59.3
R101 R107	100B5	66.5	Φ180	Φ215	Φ250	Φ15	18	4.5	≥61	Φ28	8	31.3
	112B5	66.5	Φ180	Φ215	Φ250	Φ15	18	4.5	≥81	Φ28	8	31.3
	132B5	95	Φ230	Φ265	Φ300	Φ15	18	6	≥111	Φ38	10	41.3
	160B5	136.5	Φ250	Φ300	Φ350	Φ19	24	6	≥111	Φ42	12	45.3
	180B5	136.5	Φ250	Φ300	Φ350	Φ19	24	6	≥111	Φ48	14	51.8
	200B5	138.5	Φ300	Φ350	Φ400	Φ19	26	6	≥111	Φ55	16	59.3
	225B5	168.5	Φ350	Φ400	Φ450	Φ19	28	6	≥141	Φ60	18	64.4
R137	132B5	88	Φ230	Φ265	Φ300	Φ15	18	6	≥111	Φ38	10	41.3
	160B5	129.5	Φ250	Φ300	Φ350	Φ19	24	6	≥111	Φ42	12	45.3
	180B5	129.5	Φ250	Φ300	Φ350	Φ19	24	6	≥111	Φ48	14	51.8
	200B5	131.5	Φ300	Φ350	Φ400	Φ19	26	6	≥141	Φ55	16	59.3
	225B5	161.5	Φ350	Φ400	Φ450	Φ19	33	6	≥141	Φ60	18	64.4
	250B5	177	Φ450	Φ500	Φ550	Φ19	27	6	≥141	Φ65	18	69.4
R147	132B5	80	Φ230	Φ265	Φ300	Φ15	18	6	≥111	Φ38	10	41.3
	160B5	121.5	Φ250	Φ300	Φ350	Φ19	24	6	≥111	Φ42	12	45.3
	180B5	121.5	Φ250	Φ300	Φ350	Φ19	24	6	≥111	Φ48	14	51.8
	200B5	123.5	Φ300	Φ350	Φ400	Φ19	26	6	≥111	Φ55	16	59.3
	225B5	153.5	Φ350	Φ400	Φ450	Φ19	28	6	≥141	Φ60	18	64.4
	250B5	170	Φ450	Φ500	Φ550	Φ19	29	6	≥141	Φ65	18	69.4
	280B5	170	Φ450	Φ500	Φ550	Φ19	29	6	≥141	Φ75	20	79.9
R167	160B5	113.5	Φ250	Φ300	Φ350	Φ19	24	6	≥111	Φ42	12	45.3
	180B5	113.5	Φ250	Φ300	Φ350	Φ19	24	6	≥111	Φ48	14	51.8
	200B5	115.5	Φ300	Φ350	Φ400	Φ19	26	6	≥111	Φ55	16	59.3
	225B5	146.5	Φ350	Φ400	Φ450	Φ19	28	6	≥141	Φ60	18	64.4
	250B5	160	Φ450	Φ500	Φ550	Φ19	29	6	≥141	Φ65	18	69.4
	280B5	160	Φ450	Φ500	Φ550	Φ19	29	6	≥141	Φ75	20	79.9
	315B5	184	Φ550	Φ600	Φ660	Φ24	32	7	≥171	Φ80	22	85.4

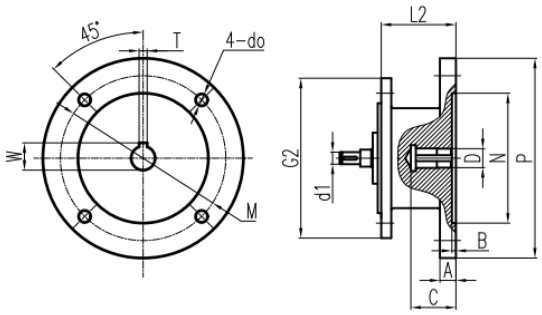

63B5~200B5

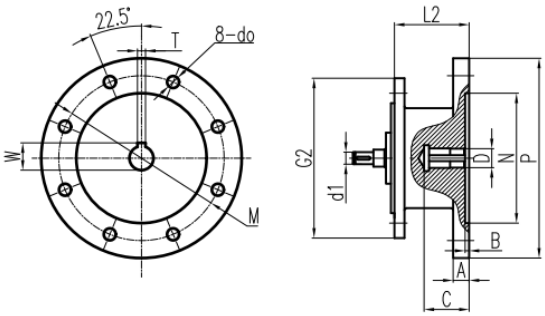

225B5~315B5

Model	B5 size	L2	N	M	P	do	A	B	≥C	D	T	W
K37	63B5	61.5	Φ95	Φ115	Φ140	Φ10	14	4	≥24	Φ11	4	12.8
	71B5	61.5	Φ110	Φ130	Φ160	Φ10	11	4	≥31	Φ14	5	16.3
	80B5	80	Φ130	Φ160	Φ200	Φ12	12	4	≥41	Φ19	6	21.9
	90B5	80	Φ130	Φ160	Φ200	Φ12	12	4	≥51	Φ24	8	27.3
	100B5	98	Φ180	Φ215	Φ250	Φ14	17	4.5	≥61	Φ28	8	31.3
K47	63B5	56	Φ95	Φ115	Φ140	Φ10	14	4	≥24	Φ11	4	12.8
	71B5	56	Φ110	Φ130	Φ160	Φ10	13	4	≥31	Φ14	5	16.3
	80B5	74.5	Φ130	Φ160	Φ200	Φ12	15	4	≥41	Φ19	6	21.9
	90B5	74.5	Φ130	Φ160	Φ200	Φ12	15	4	≥51	Φ24	8	27.3
	100B5	90.5	Φ180	Φ215	Φ250	Φ14	17	4.5	≥61	Φ28	8	31.3
K57	63B5	56	Φ95	Φ115	Φ140	Φ10	14	4	≥24	Φ11	4	12.8
	71B5	56	Φ110	Φ130	Φ160	Φ10	13	4	≥31	Φ14	5	16.3
	80B5	74.5	Φ130	Φ160	Φ200	Φ12	15	4	≥41	Φ19	6	21.9
	90B5	74.5	Φ130	Φ160	Φ200	Φ12	15	4	≥51	Φ24	8	27.3
	100B5	90.5	Φ180	Φ215	Φ250	Φ14	17	4.5	≥61	Φ28	8	31.3
	112B5	90.5	Φ180	Φ215	Φ250	Φ14	17	4.5	≥81	Φ28	8	31.3
K67	63B5	56	Φ95	Φ115	Φ140	Φ10	14	4	≥24	Φ11	4	12.8
	71B5	56	Φ110	Φ130	Φ160	Φ10	13	4	≥31	Φ14	5	16.3
	80B5	74.5	Φ130	Φ160	Φ200	Φ12	15	4	≥41	Φ19	6	21.9
	90B5	74.5	Φ130	Φ160	Φ200	Φ12	15	4	≥51	Φ24	8	27.3
	100B5	90.5	Φ180	Φ215	Φ250	Φ14	17	4.5	≥61	Φ28	8	31.3
	112B5	90.5	Φ180	Φ215	Φ250	Φ14	17	4.5	≥81	Φ28	8	31.3
	132B5	123	Φ230	Φ265	Φ300	Φ14	18	6	≥111	Φ38	10	41.3
K77	63B5	50	Φ95	Φ115	Φ140	Φ10	14	4	≥24	Φ11	4	12.8
	71B5	50	Φ110	Φ130	Φ160	Φ10	10	4	≥31	Φ14	5	16.3
	80B5	68.5	Φ130	Φ160	Φ200	Φ12	16	4	≥41	Φ19	6	21.9
	90B5	68.5	Φ130	Φ160	Φ200	Φ12	16	4	≥51	Φ24	8	27.3
	100B5	82.5	Φ180	Φ215	Φ250	Φ15	17	4.5	≥61	Φ28	8	31.3
	112B5	82.5	Φ180	Φ215	Φ250	Φ15	17	4.5	≥81	Φ28	8	31.3
	132B5	111	Φ230	Φ265	Φ300	Φ15	17	6	≥111	Φ38	10	41.3
	160B5	152.5	Φ250	Φ300	Φ350	Φ19	24	6	≥111	Φ42	12	45.3

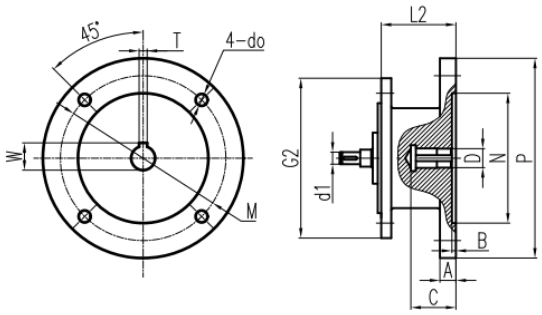

63B5~200B5

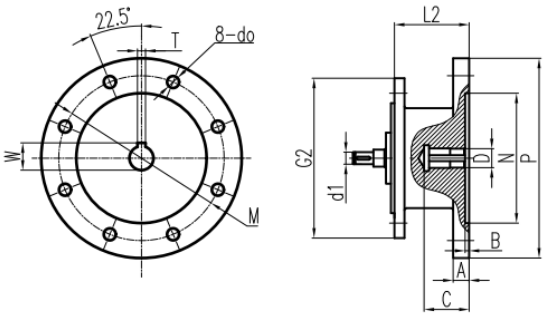

225B5~315B5

Model	B5 size	L2	N	M	P	do	A	B	≥C	D	T	W
K87	80B5	63.5	Φ130	Φ160	Φ200	Φ12	16	4	≥41	Φ19	6	21.9
	90B5	63.5	Φ130	Φ160	Φ200	Φ12	18	4	≥51	Φ24	8	27.3
	100B5	78.5	Φ180	Φ215	Φ250	Φ15	18	4.5	≥61	Φ28	8	31.3
	112B5	106	Φ180	Φ215	Φ250	Φ15	18	4.5	≥81	Φ28	8	31.3
	132B5	106	Φ230	Φ265	Φ300	Φ15	20	6	≥111	Φ38	10	41.3
	160B5	147.5	Φ250	Φ300	Φ350	Φ19	23	6	≥111	Φ42	12	45.3
	180B5	147.5	Φ250	Φ300	Φ350	Φ19	23	6	≥111	Φ48	14	51.8
K97	90B5	54.5	Φ130	Φ160	Φ200	Φ12	13	4	≥51	Φ24	8	27.3
	100B5	72.5	Φ180	Φ215	Φ250	Φ15	14	4.5	≥61	Φ28	8	31.3
	112B5	72.5	Φ180	Φ215	Φ250	Φ15	14	4.5	≥81	Φ28	8	31.3
	132B5	101	Φ230	Φ265	Φ300	Φ15	18	6	≥111	Φ38	10	41.3
	160B5	142.5	Φ250	Φ300	Φ350	Φ19	23	6	≥111	Φ42	12	45.3
	180B5	142.5	Φ250	Φ300	Φ350	Φ19	23	6	≥111	Φ48	14	51.8
	200B5	174.5	Φ300	Φ350	Φ400	Φ19	26	6	≥111	Φ55	16	59.3
K107	100B5	66.5	Φ180	Φ215	Φ250	Φ15	18	4.5	≥61	Φ28	8	31.3
	112B5	66.5	Φ180	Φ215	Φ250	Φ15	18	4.5	≥81	Φ28	8	31.3
	132B5	95	Φ230	Φ265	Φ300	Φ15	18	6	≥111	Φ38	10	41.3
	160B5	136.5	Φ250	Φ300	Φ350	Φ19	24	6	≥111	Φ42	12	45.3
	180B5	136.5	Φ250	Φ300	Φ350	Φ19	24	6	≥111	Φ48	14	51.8
	200B5	138.5	Φ300	Φ350	Φ400	Φ19	26	6	≥111	Φ55	16	59.3
	225B5	168.5	Φ350	Φ400	Φ450	Φ19	28	6	≥141	Φ60	18	64.4
K127	132B5	80	Φ230	Φ265	Φ300	Φ15	18	6	≥111	Φ38	10	41.3
	160B5	121.5	Φ250	Φ300	Φ350	Φ19	24	6	≥111	Φ42	12	45.3
	180B5	121.5	Φ250	Φ300	Φ350	Φ19	24	6	≥111	Φ48	14	51.8
	200B5	123.5	Φ300	Φ350	Φ400	Φ19	26	6	≥111	Φ55	16	59.3
	225B5	153.5	Φ350	Φ400	Φ450	Φ19	28	6	≥141	Φ60	18	64.4
	250B5	170	Φ450	Φ500	Φ550	Φ19	29	6	≥141	Φ65	18	69.4
	280B5	170	Φ450	Φ500	Φ550	Φ19	29	6	≥141	Φ75	20	79.9
K157 K167 K187	160B5	113.5	Φ250	Φ300	Φ350	Φ19	24	6	≥111	Φ42	12	45.3
	180B5	113.5	Φ250	Φ300	Φ350	Φ19	24	6	≥111	Φ48	14	51.8
	200B5	115.5	Φ300	Φ350	Φ400	Φ19	26	6	≥111	Φ55	16	59.3
	225B5	146.5	Φ350	Φ400	Φ450	Φ19	28	6	≥141	Φ60	18	64.4
	250B5	160	Φ450	Φ500	Φ550	Φ19	29	6	≥141	Φ65	18	69.4
	280B5	160	Φ450	Φ500	Φ550	Φ19	29	6	≥141	Φ75	20	79.9
	315B5	184	Φ550	Φ600	Φ660	Φ24	32	7	≥171	Φ80	22	85.4

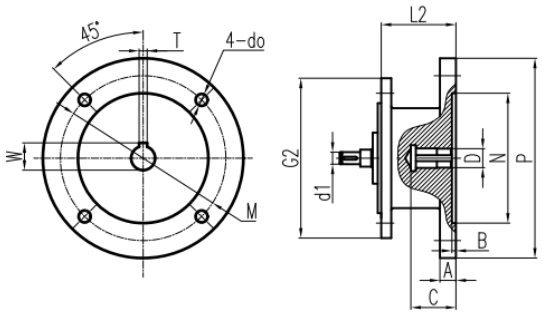

63B5~200B5

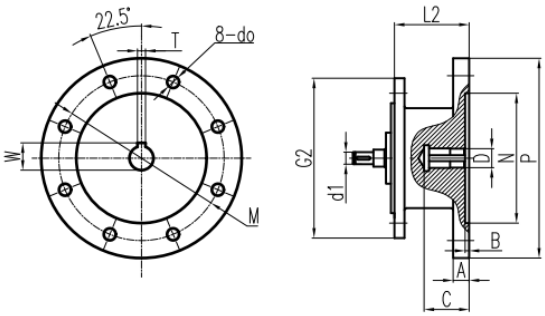

225B5~315B5

Model	B5 size	L2	N	M	P	do	A	B	≥C	D	T	W
F37 F47	63B5	61.5	Φ95	Φ115	Φ140	Φ10	14	4	≥24	Φ11	4	12.8
	71B5	61.5	Φ110	Φ130	Φ160	Φ10	11	4	≥31	Φ14	5	16.3
	80B5	80	Φ130	Φ160	Φ200	Φ12	12	4	≥41	Φ19	6	21.9
	90B5	80	Φ130	Φ160	Φ200	Φ12	12	4	≥51	Φ24	8	27.3
	100B5	98	Φ180	Φ215	Φ250	Φ14	17	4.5	≥61	Φ28	8	31.3
F57	63B5	56	Φ95	Φ115	Φ140	Φ10	14	4	≥24	Φ11	4	12.8
	71B5	56	Φ110	Φ130	Φ160	Φ10	13	4	≥31	Φ14	5	16.3
	80B5	74.5	Φ130	Φ160	Φ200	Φ12	15	4	≥41	Φ19	6	21.9
	90B5	74.5	Φ130	Φ160	Φ200	Φ12	15	4	≥51	Φ24	8	27.3
	100B5	90.5	Φ180	Φ215	Φ250	Φ14	17	4.5	≥61	Φ28	8	31.3
	112B5	90.5	Φ180	Φ215	Φ250	Φ14	17	4.5	≥81	Φ28	8	31.3
F67	63B5	56	Φ95	Φ115	Φ140	Φ10	14	4	≥24	Φ11	4	12.8
	71B5	56	Φ110	Φ130	Φ160	Φ10	13	4	≥31	Φ14	5	16.3
	80B5	74.5	Φ130	Φ160	Φ200	Φ12	15	4	≥41	Φ19	6	21.9
	90B5	74.5	Φ130	Φ160	Φ200	Φ12	15	4	≥51	Φ24	8	27.3
	100B5	90.5	Φ180	Φ215	Φ250	Φ14	17	4.5	≥61	Φ28	8	31.3
	112B5	90.5	Φ180	Φ215	Φ250	Φ14	17	4.5	≥81	Φ28	8	31.3
	132B5	123	Φ230	Φ265	Φ300	Φ14	18	6	≥111	Φ38	10	41.3
F77	63B5	50	Φ95	Φ115	Φ140	Φ10	14	4	≥24	Φ11	4	12.8
	71B5	50	Φ110	Φ130	Φ160	Φ10	10	4	≥31	Φ14	5	16.3
	80B5	68.5	Φ130	Φ160	Φ200	Φ12	16	4	≥41	Φ19	6	21.9
	90B5	68.5	Φ130	Φ160	Φ200	Φ12	16	4	≥51	Φ24	8	27.3
	100B5	82.5	Φ180	Φ215	Φ250	Φ15	17	4.5	≥61	Φ28	8	31.3
	112B5	82.5	Φ180	Φ215	Φ250	Φ15	17	4.5	≥81	Φ28	8	31.3
	132B5	111	Φ230	Φ265	Φ300	Φ15	17	6	≥111	Φ38	10	41.3
	160B5	152.5	Φ250	Φ300	Φ350	Φ19	24	6	≥111	Φ42	12	45.3
F87	80B5	63.5	Φ130	Φ160	Φ200	Φ12	16	4	≥41	Φ19	6	21.9
	90B5	63.5	Φ130	Φ160	Φ200	Φ12	18	4	≥51	Φ24	8	27.3
	100B5	78.5	Φ180	Φ215	Φ250	Φ15	18	4.5	≥61	Φ28	8	31.3
	112B5	106	Φ180	Φ215	Φ250	Φ15	18	4.5	≥81	Φ28	8	31.3
	132B5	106	Φ230	Φ265	Φ300	Φ15	20	6	≥111	Φ38	10	41.3
	160B5	147.5	Φ250	Φ300	Φ350	Φ19	23	6	≥111	Φ42	12	45.3
	180B5	147.5	Φ250	Φ300	Φ350	Φ19	23	6	≥111	Φ48	14	51.8

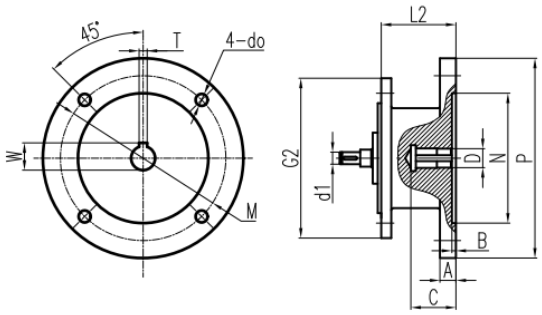

63B5~200B5

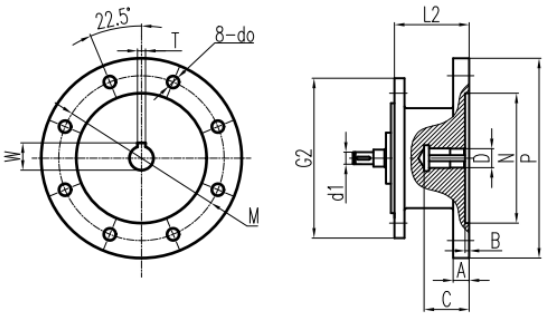

225B5~315B5

Model	B5 size	L2	N	M	P	do	A	B	≥C	D	T	W
F97	80B5	54.5	Φ130	Φ160	Φ200	Φ12	13	4	≥41	Φ19	6	21.9
	90B5	54.5	Φ130	Φ160	Φ200	Φ12	13	4	≥51	Φ24	8	27.3
	100B5	72.5	Φ180	Φ215	Φ250	Φ15	14	4.5	≥61	Φ28	8	31.3
	112B5	72.5	Φ180	Φ215	Φ250	Φ15	14	4.5	≥81	Φ28	8	31.3
	132B5	101	Φ230	Φ265	Φ300	Φ15	18	6	≥111	Φ38	10	41.3
	160B5	142.5	Φ250	Φ300	Φ350	Φ19	23	6	≥111	Φ42	12	45.3
	180B5	142.5	Φ250	Φ300	Φ350	Φ19	23	6	≥111	Φ48	14	51.8
	200B5	174.5	Φ300	Φ350	Φ400	Φ19	26	6	≥111	Φ55	16	59.3
F107	100B5	66.5	Φ180	Φ215	Φ250	Φ15	18	4.5	≥61	Φ28	8	31.3
	112B5	66.5	Φ180	Φ215	Φ250	Φ15	18	4.5	≥81	Φ28	8	31.3
	132B5	95	Φ230	Φ265	Φ300	Φ15	18	6	≥111	Φ38	10	41.3
	160B5	136.5	Φ250	Φ300	Φ350	Φ19	24	6	≥111	Φ42	12	45.3
	180B5	136.5	Φ250	Φ300	Φ350	Φ19	24	6	≥111	Φ48	14	51.8
	200B5	138.5	Φ300	Φ350	Φ400	Φ19	26	6	≥111	Φ55	16	59.3
	225B5	168.5	Φ350	Φ400	Φ450	Φ19	28	6	≥141	Φ60	18	64.4
F127	132B5	80	Φ230	Φ265	Φ300	Φ15	18	6	≥111	Φ38	10	41.3
	160B5	121.5	Φ250	Φ300	Φ350	Φ19	24	6	≥111	Φ42	12	45.3
	180B5	121.5	Φ250	Φ300	Φ350	Φ19	24	6	≥111	Φ48	14	51.8
	200B5	123.5	Φ300	Φ350	Φ400	Φ19	26	6	≥111	Φ55	16	59.3
	225B5	153.5	Φ350	Φ400	Φ450	Φ19	28	6	≥141	Φ60	18	64.4
	250B5	170	Φ450	Φ500	Φ550	Φ19	29	6	≥141	Φ65	18	69.4
	280B5	170	Φ450	Φ500	Φ550	Φ19	29	6	≥141	Φ75	20	79.9
F157	160B5	113.5	Φ250	Φ300	Φ350	Φ19	24	6	≥111	Φ42	12	45.3
	180B5	113.5	Φ250	Φ300	Φ350	Φ19	24	6	≥111	Φ48	14	51.8
	200B5	115.5	Φ300	Φ350	Φ400	Φ19	26	6	≥111	Φ55	16	59.3
	225B5	146.5	Φ350	Φ400	Φ450	Φ19	28	6	≥141	Φ60	18	64.4
	250B5	160	Φ450	Φ500	Φ550	Φ19	29	6	≥141	Φ65	18	69.4
	280B5	160	Φ450	Φ500	Φ550	Φ19	29	6	≥141	Φ75	20	79.9
	315B5	184	Φ550	Φ600	Φ660	Φ24	32	7	≥171	Φ80	22	85.4

3.2 Adapters for mounting IEC B14 motors

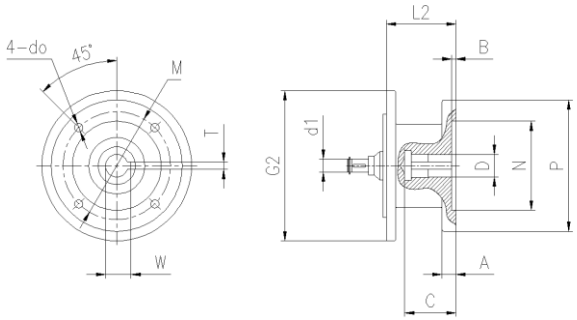

63B14~132B14

Model	B14 size	L2	N	M	P	4-do	A	B	C	D	T	W
R17	63B14	50	Φ60	Φ75	Φ90	4-Φ6	9	3.5	30.5	Φ11	4	12.8
	71B14	54	Φ70	Φ85	Φ105	4-Φ7	10	3.5	33.5	Φ14	5	16.3
	80B14	69	Φ80	Φ100	Φ120	4-Φ7	12	4.5	44.5	Φ19	6	21.9
R27 R37	63B14	50	Φ60	Φ75	Φ90	4-Φ6	9	3.5	30.5	Φ11	4	12.8
	71B14	54	Φ70	Φ85	Φ105	4-Φ7	10	3.5	33.5	Φ14	5	16.3
	80B14	69	Φ80	Φ100	Φ120	4-Φ7	12	4.5	44.5	Φ19	6	21.9
	90B14	69	Φ95	Φ115	Φ140	4-Φ9	12	4.5	54.5	Φ24	8	27.3
	100B14	81	Φ110	Φ130	Φ160	4-Φ9	15	6	66	Φ28	8	31.3
R51 R61 R47 R57 R67	63B14	50	Φ60	Φ75	Φ90	4-Φ6	9	3.5	30.5	Φ11	4	12.8
	71B14	54	Φ70	Φ85	Φ105	4-Φ7	10	3.5	33.5	Φ14	5	16.3
	80B14	69	Φ80	Φ100	Φ120	4-Φ7	12	4.5	44.5	Φ19	6	21.9
	90B14	69	Φ95	Φ115	Φ140	4-Φ9	12	4.5	58.5	Φ24	8	27.3
	100B14	81	Φ110	Φ130	Φ160	4-Φ9	15	6	66	Φ28	8	31.3
	112B14	81	Φ110	Φ130	Φ160	4-Φ9	15	6	66	Φ28	8	31.3
	132B14	93	Φ130	Φ165	Φ200	4-Φ11	16	5	85	Φ38	10	41.3
R71 R77	63B14	54	Φ60	Φ75	Φ90	4-Φ6	9	3.5	34	Φ11	4	12.8
	71B14	54	Φ70	Φ85	Φ105	4-Φ7	10	3.5	33.5	Φ14	5	16.3
	80B14	69	Φ80	Φ100	Φ120	4-Φ7	12	4.5	59.5	Φ19	6	21.9
	90B14	69	Φ95	Φ115	Φ140	4-Φ9	12	4.5	58.5	Φ24	8	27.3
	100B14	81	Φ110	Φ130	Φ160	4-Φ9	15	5	66	Φ28	8	31.3
	112B14	81	Φ110	Φ130	Φ160	4-Φ9	15	5	66	Φ28	8	31.3
	132B14	93	Φ130	Φ165	Φ200	4-Φ11	16	5	85	Φ38	10	41.3
R81 R87	80B14	69	Φ80	Φ100	Φ120	4-Φ7	12	4.5	44.5	Φ19	6	21.9
	90B14	69	Φ95	Φ115	Φ140	4-Φ9	12	4.5	58.5	Φ24	8	27.3
	100B14	81	Φ110	Φ130	Φ160	4-Φ9	15	6	66	Φ28	8	31.3
	112B14	81	Φ110	Φ130	Φ160	4-Φ9	15	6	66	Φ28	8	31.3
	132B14	92	Φ130	Φ165	Φ200	4-Φ11	16	5	86	Φ38	10	41.3
R91 R97	80B14	69	Φ80	Φ100	Φ120	4-Φ7	12	4.5	45	Φ19	6	21.9
	90B14	69	Φ95	Φ115	Φ140	4-Φ9	12	4.5	53.5	Φ24	8	27.3
	100B14	81	Φ110	Φ130	Φ160	4-Φ9	15	5	66	Φ28	8	31.3
	112B14	81	Φ110	Φ130	Φ160	4-Φ9	15	5	66	Φ28	8	31.3
	132B14	92	Φ130	Φ165	Φ200	4-Φ11	16	5	85	Φ38	10	41.3
R101 R107	100B14	81	Φ110	Φ130	Φ160	4-Φ9	15	6	66	Φ28	8	31.3
	112B14	81	Φ110	Φ130	Φ160	4-Φ9	15	6	66	Φ28	8	31.3
	132B14	92	Φ130	Φ165	Φ200	4-Φ11	16	5	86	Φ38	10	41.3

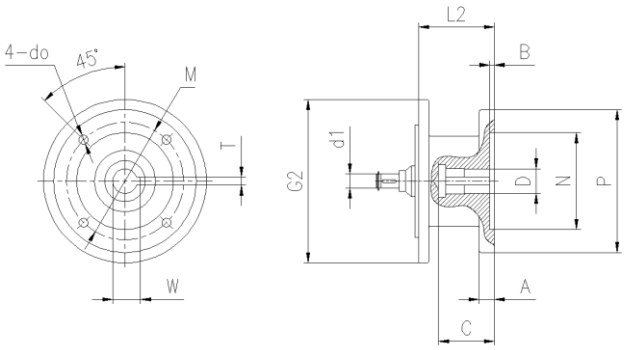

63B14~132B14

Model	B14 size	L2	N	M	P	4-do	A	B	C	D	T	W
K37	63B14	50	Φ60	Φ75	Φ90	4-Φ6	9	3.5	30.5	Φ11	4	12.8
	71B14	54	Φ70	Φ85	Φ105	4-Φ7	10	3.5	33.5	Φ14	5	16.3
	80B14	69	Φ80	Φ100	Φ120	4-Φ7	12	4.5	44.5	Φ19	6	21.9
	90B14	69	Φ95	Φ115	Φ140	4-Φ9	12	4.5	54.5	Φ24	8	27.3
	100B14	81	Φ110	Φ130	Φ160	4-Φ9	15	6	66	Φ28	8	31.3
K47	63B14	50	Φ60	Φ75	Φ90	4-Φ6	9	3.5	30.5	Φ11	4	12.8
	71B14	54	Φ70	Φ85	Φ105	4-Φ7	10	3.5	33.5	Φ14	5	16.3
	80B14	69	Φ80	Φ100	Φ120	4-Φ7	12	4.5	44.5	Φ19	6	21.9
	90B14	69	Φ95	Φ115	Φ140	4-Φ9	12	4.5	58.5	Φ24	8	27.3
	100B14	81	Φ110	Φ130	Φ160	4-Φ9	15	6	66	Φ28	8	31.3
K57	63B14	50	Φ60	Φ75	Φ90	4-Φ6	9	3.5	30.5	Φ11	4	12.8
	71B14	54	Φ70	Φ85	Φ105	4-Φ7	10	3.5	33.5	Φ14	5	16.3
	80B14	69	Φ80	Φ100	Φ120	4-Φ7	12	4.5	44.5	Φ19	6	21.9
	90B14	69	Φ95	Φ115	Φ140	4-Φ9	12	4.5	58.5	Φ24	8	27.3
	100B14	81	Φ110	Φ130	Φ160	4-Φ9	15	6	66	Φ28	8	31.3
	112B14	81	Φ110	Φ130	Φ160	4-Φ9	15	6	66	Φ28	8	31.3
K67	63B14	50	Φ60	Φ75	Φ90	4-Φ6	9	3.5	30.5	Φ11	4	12.8
	71B14	54	Φ70	Φ85	Φ105	4-Φ7	10	3.5	33.5	Φ14	5	16.3
	80B14	69	Φ80	Φ100	Φ120	4-Φ7	12	4.5	44.5	Φ19	6	21.9
	90B14	69	Φ95	Φ115	Φ140	4-Φ9	12	4.5	58.5	Φ24	8	27.3
	100B14	81	Φ110	Φ130	Φ160	4-Φ9	15	6	66	Φ28	8	31.3
	112B14	81	Φ110	Φ130	Φ160	4-Φ9	15	6	66	Φ28	8	31.3
	132B14	93	Φ130	Φ165	Φ200	4-Φ11	16	5	85	Φ38	10	41.3

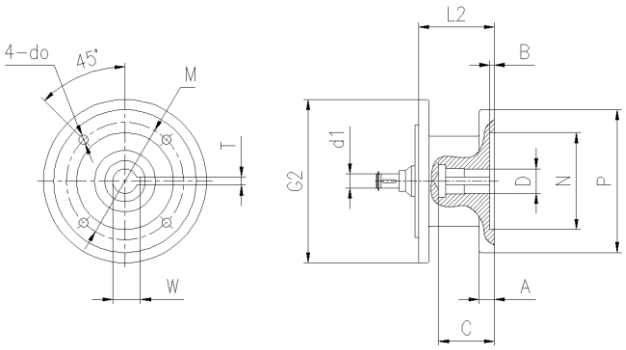

63B14~132B14

Model	B14 size	L2	N	M	P	4-do	A	B	C	D	T	W
K77	63B14	54	Φ60	Φ75	Φ90	4-Φ6	9	3.5	34	Φ11	4	12.8
	71B14	54	Φ70	Φ85	Φ105	4-Φ7	10	3.5	33.5	Φ14	5	16.3
	80B14	69	Φ80	Φ100	Φ120	4-Φ7	12	4.5	59.5	Φ19	6	21.9
	90B14	69	Φ95	Φ115	Φ140	4-Φ9	12	4.5	58.5	Φ24	8	27.3
	100B14	81	Φ110	Φ130	Φ160	4-Φ9	15	5	66	Φ28	8	31.3
	112B14	81	Φ110	Φ130	Φ160	4-Φ9	15	5	66	Φ28	8	31.3
	132B14	93	Φ130	Φ165	Φ200	4-Φ11	16	5	85	Φ38	10	41.3
K87	80B14	69	Φ80	Φ100	Φ120	4-Φ7	12	4.5	44.5	Φ19	6	21.9
	90B14	69	Φ95	Φ115	Φ140	4-Φ9	12	4.5	58.5	Φ24	8	27.3
	100B14	81	Φ110	Φ130	Φ160	4-Φ9	15	6	66	Φ28	8	31.3
	112B14	81	Φ110	Φ130	Φ160	4-Φ9	15	6	66	Φ28	8	31.3
	132B14	92	Φ130	Φ165	Φ200	4-Φ11	16	5	86	Φ38	10	41.3
K97	80B14	69	Φ80	Φ100	Φ120	4-Φ7	12	4.5	45	Φ19	6	21.9
	90B14	69	Φ95	Φ115	Φ140	4-Φ9	12	4.5	53.5	Φ24	8	27.3
	100B14	81	Φ110	Φ130	Φ160	4-Φ9	15	5	66	Φ28	8	31.3
	112B14	81	Φ110	Φ130	Φ160	4-Φ9	15	5	66	Φ28	8	31.3
	132B14	92	Φ130	Φ165	Φ200	4-Φ11	16	5	85	Φ38	10	41.3
K107	100B14	81	Φ110	Φ130	Φ160	4-Φ9	15	6	66	Φ28	8	31.3
	112B14	81	Φ110	Φ130	Φ160	4-Φ9	15	6	66	Φ28	8	31.3
	132B14	92	Φ130	Φ165	Φ200	4-Φ11	16	5	86	Φ38	10	41.3

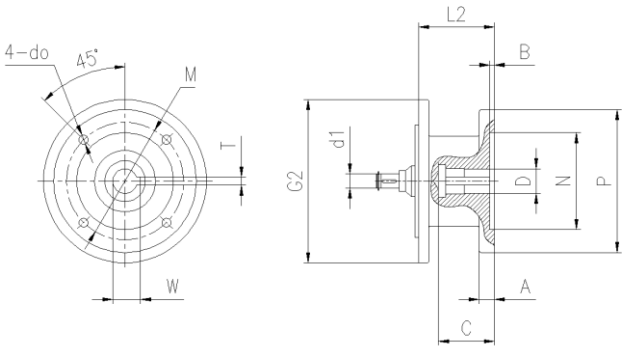

63B14~132B14

Model	B14 size	L2	N	M	P	4-do	A	B	C	D	T	W
F37	63B14	50	Φ60	Φ75	Φ90	4-Φ6	9	3.5	30.5	Φ11	4	12.8
	71B14	54	Φ70	Φ85	Φ105	4-Φ7	10	3.5	33.5	Φ14	5	16.3
	80B14	69	Φ80	Φ100	Φ120	4-Φ7	12	4.5	44.5	Φ19	6	21.9
	90B14	69	Φ95	Φ115	Φ140	4-Φ9	12	4.5	54.5	Φ24	8	27.3
	100B14	81	Φ110	Φ130	Φ160	4-Φ9	15	6	66	Φ28	8	31.3
F47	63B14	50	Φ60	Φ75	Φ90	4-Φ6	9	3.5	30.5	Φ11	4	12.8
	71B14	54	Φ70	Φ85	Φ105	4-Φ7	10	3.5	33.5	Φ14	5	16.3
	80B14	69	Φ80	Φ100	Φ120	4-Φ7	12	4.5	44.5	Φ19	6	21.9
	90B14	69	Φ95	Φ115	Φ140	4-Φ9	12	4.5	58.5	Φ24	8	27.3
	100B14	81	Φ110	Φ130	Φ160	4-Φ9	15	6	66	Φ28	8	31.3
F57	63B14	50	Φ60	Φ75	Φ90	4-Φ6	9	3.5	30.5	Φ11	4	12.8
	71B14	54	Φ70	Φ85	Φ105	4-Φ7	10	3.5	33.5	Φ14	5	16.3
	80B14	69	Φ80	Φ100	Φ120	4-Φ7	12	4.5	44.5	Φ19	6	21.9
	90B14	69	Φ95	Φ115	Φ140	4-Φ9	12	4.5	58.5	Φ24	8	27.3
	100B14	81	Φ110	Φ130	Φ160	4-Φ9	15	6	66	Φ28	8	31.3
	112B14	81	Φ110	Φ130	Φ160	4-Φ9	15	6	66	Φ28	8	31.3
F67	63B14	50	Φ60	Φ75	Φ90	4-Φ6	9	3.5	30.5	Φ11	4	12.8
	71B14	54	Φ70	Φ85	Φ105	4-Φ7	10	3.5	33.5	Φ14	5	16.3
	80B14	69	Φ80	Φ100	Φ120	4-Φ7	12	4.5	44.5	Φ19	6	21.9
	90B14	69	Φ95	Φ115	Φ140	4-Φ9	12	4.5	58.5	Φ24	8	27.3
	100B14	81	Φ110	Φ130	Φ160	4-Φ9	15	6	66	Φ28	8	31.3
	112B14	81	Φ110	Φ130	Φ160	4-Φ9	15	6	66	Φ28	8	31.3
	132B14	93	Φ130	Φ165	Φ200	4-Φ11	16	5	85	Φ38	10	41.3

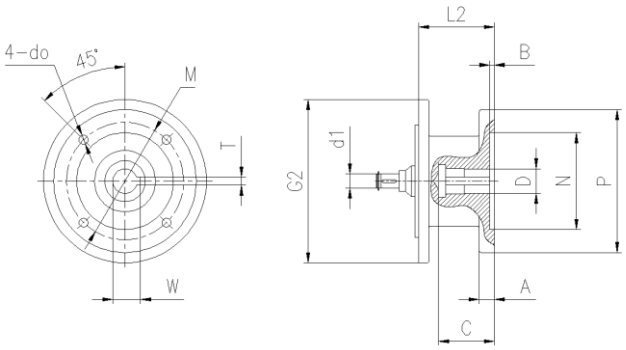

63B14~132B14

Model	B14 size	L2	N	M	P	4-do	A	B	C	D	T	W
F77	63B14	54	Φ60	Φ75	Φ90	4-Φ6	9	3.5	34	Φ11	4	12.8
	71B14	54	Φ70	Φ85	Φ105	4-Φ7	10	3.5	33.5	Φ14	5	16.3
	80B14	69	Φ80	Φ100	Φ120	4-Φ7	12	4.5	59.5	Φ19	6	21.9
	90B14	69	Φ95	Φ115	Φ140	4-Φ9	12	4.5	58.5	Φ24	8	27.3
	100B14	81	Φ110	Φ130	Φ160	4-Φ9	15	5	66	Φ28	8	31.3
	112B14	81	Φ110	Φ130	Φ160	4-Φ9	15	5	66	Φ28	8	31.3
	132B14	93	Φ130	Φ165	Φ200	4-Φ11	16	5	85	Φ38	10	41.3
F87	80B14	69	Φ80	Φ100	Φ120	4-Φ7	12	4.5	44.5	Φ19	6	21.9
	90B14	69	Φ95	Φ115	Φ140	4-Φ9	12	4.5	58.5	Φ24	8	27.3
	100B14	81	Φ110	Φ130	Φ160	4-Φ9	15	6	66	Φ28	8	31.3
	112B14	81	Φ110	Φ130	Φ160	4-Φ9	15	6	66	Φ28	8	31.3
	132B14	92	Φ130	Φ165	Φ200	4-Φ11	16	5	86	Φ38	10	41.3
F97	80B14	69	Φ80	Φ100	Φ120	4-Φ7	12	4.5	45	Φ19	6	21.9
	90B14	69	Φ95	Φ115	Φ140	4-Φ9	12	4.5	53.5	Φ24	8	27.3
	100B14	81	Φ110	Φ130	Φ160	4-Φ9	15	5	66	Φ28	8	31.3
	112B14	81	Φ110	Φ130	Φ160	4-Φ9	15	5	66	Φ28	8	31.3
	132B14	92	Φ130	Φ165	Φ200	4-Φ11	16	5	85	Φ38	10	41.3
F107	100B14	81	Φ110	Φ130	Φ160	4-Φ9	15	6	66	Φ28	8	31.3
	112B14	81	Φ110	Φ130	Φ160	4-Φ9	15	6	66	Φ28	8	31.3
	132B14	92	Φ130	Φ165	Φ200	4-Φ11	16	5	86	Φ38	10	41.3

3.3 Adapters for mounting servo motors

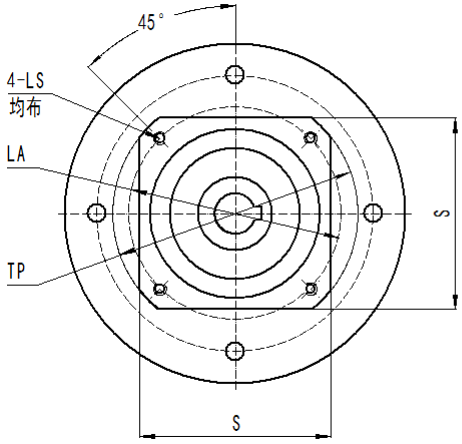

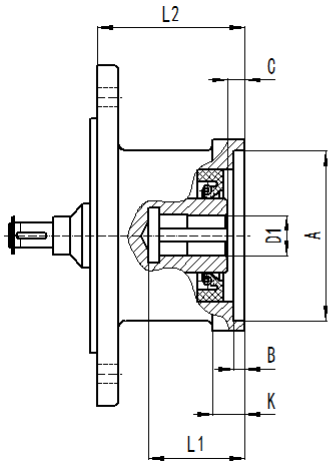

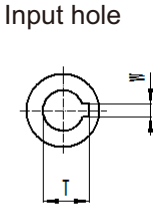

Model	Model number	A	B	C	K	D1	L1	S	LA	TP	4-LS	W	T	L2
WR17 WR37 WF37 WF47 WK37	S60N50/D14	Φ50G7	6	6	10	Φ14E8	36	□60	Φ70	Φ82	4-M5	5	16.3	56.5
	S80N70/D19	Φ70G7	8	8	14	Φ19E8	50	□80	Φ90	Φ105	4-M6	6	21.8	71
	S80N70/D22W6					Φ22E8	62					6	24.8	
	S80N70/D22W8					Φ22E8						8	25.3	
	S80N70/D24					Φ24E8						8	27.3	
	S90N80/D19	Φ80G7	8	8	14	Φ19E8	50	□90	Φ100	Φ118	4-M6	6	21.8	71
	S90N80/D22W6					Φ22E8	62					6	24.8	
	S90N80/D22W8					Φ22E8						8	25.3	
	S90N80/D24					Φ24E8						8	27.3	
	S110N95/D19	Φ95G7	8	8	14	Φ19E8	50	□110	Φ115	Φ145	4-M6	6	21.8	71
	S110N95/D22W6					Φ22E8	62					6	24.8	
	S110N95/D22W8					Φ22E8						8	25.3	
	S110N95/D24					Φ24E8						8	27.3	
	S130N110/D19	Φ110G7	8	8	14	Φ19E8	50	□130	Φ145	Φ180	4-M8	6	21.8	71
	S130N110/D22W6					Φ22E8	62					6	24.8	
	S130N110/D22W8					Φ22E8						8	25.3	
	S130N110/D24					Φ24E8						8	27.3	

Model	Model number	A	B	C	K	D1	L1	S	LA	TP	4-LS	W	T	L2
WR51 WR61 WR47 WR57 WR67 WF57 WF67 WK47 WK57 WK67	S60N50/D14	Φ50G7	6	6	10	Φ14E8	33.5	□60	Φ70	Φ80	4-M5	5	16.3	56.5
	S80N70/D19	Φ70G7	8	8	14	Φ19E8	50	□80	Φ90	Φ105	4-M6	6	21.8	71
	S80N70/D22W6					Φ22E8	62					6	24.8	
	S80N70/D22W8					Φ22E8						8	25.3	
	S80N70/D24					Φ24E8						8	27.3	
	S90N80/D19	Φ80G7	8	8	14	Φ19E8	50	□90	Φ100	Φ118	4-M6	6	21.8	71
	S90N80/D22W6					Φ22E8	62					6	24.8	
	S90N80/D22W8					Φ22E8						8	25.3	
	S90N80/D24					Φ24E8						8	27.3	
	S110N95/D19	Φ95G7	8	8	14	Φ19E8	50	□110	Φ115	Φ145	4-M6	6	21.8	71
	S110N95/D22W6					Φ22E8	62					6	24.8	
	S110N95/D22W8					Φ22E8						8	25.3	
	S110N95/D24					Φ24E8						8	27.3	
	S130N110/D19	Φ110G7	8	8	14	Φ19E8	50	□130	Φ145	Φ180	4-M8	6	21.8	71
	S130N110/D22W6					Φ22E8	62					6	24.8	
	S130N110/D22W8					Φ22E8						8	25.3	
	S130N110/D24					Φ24E8						8	27.3	
	S180N114.3/D35	Φ114.3G7	8	8	16	Φ35E8	88	□180	Φ200	Φ240	4-M12	10	38.3	96
	S180N114.3/D38		8	8	16	Φ38E8	88					10	41.3	96

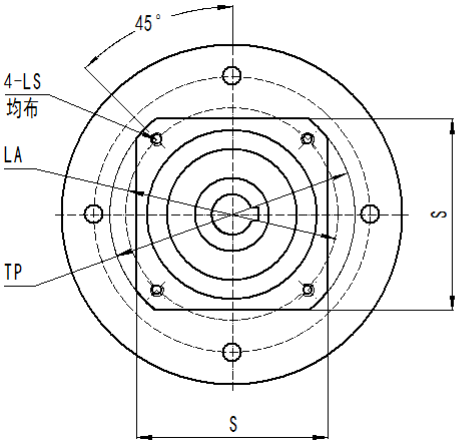

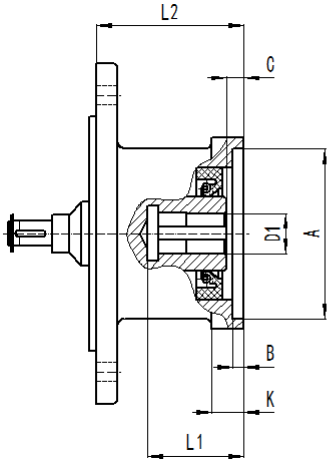

Input hole

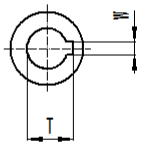

Model	Model number	A	B	C	K	D1	L1	S	LA	TP	4-LS	W	T	L2
WR71 WR77 WF77 WK77	S110N95/D19	Φ95G7	8	6	14	Φ19E8	60	□110	Φ115	Φ145	4-M6	6	21.8	70.5
	S110N95/D22W6					Φ22E8						6	24.8	
	S110N95/D22W8					Φ22E8						8	25.3	
	S110N95/D24					Φ24E8						8	27.3	
	S130N110/D19	Φ110G7	8	6	15	Φ19E8	60	□130	Φ145	Φ175	4-M8	6	21.8	70.5
	S130N110/D22W6					Φ22E8						6	24.8	
	S130N110/D22W8					Φ22E8						8	25.3	
	S130N110/D24					Φ24E8						8	27.3	
	S180N114.3/D35	Φ114.3G7	8	8	19	Φ35E8	88	□180	Φ200	Φ240	4-M12	10	38.3	96
	S180N114.3/D42					Φ42E8	118					12	45.3	125
	S200N180/D35	Φ180G7	8	8	19	Φ35E8	88	□200	Φ215	Φ250	4-M12	10	38.3	96
	S200N180/D42					Φ42E8	118			Φ255		12	45.3	125

Model	Model number	A	B	C	K	D1	L1	S	LA	TP	4-LS	W	T	L2
WR81 WR87 WF87 WK87	S110N95/D19	Φ95G7	8	8	16	Φ19E8	62	□110	Φ115	Φ145	4-M6	6	21.8	70.5
	S110N95/D22W6			6		Φ22E8	60					6	24.8	
	S110N95/D22W8			6		Φ22E8	60					8	25.3	
	S110N95/D24			8		Φ24E8	62					8	27.3	
	S130N110/D19	Φ110G7	8	8	15	Φ19E8	62	□130	Φ145	Φ165	4-M8	6	21.8	70.5
	S130N110/D22W6			6		Φ22E8	60					6	24.8	
	S130N110/D22W8			6		Φ22E8	60					8	25.3	
	S130N110/D24			8		Φ24E8	62					8	27.3	
	S180N114.3/D35	Φ114.3G7	8	8	17	Φ35E8	88	□180	Φ200	Φ245	4-M12	10	38.3	95
	S180N114.3/D42				19	Φ42E8	118					12	45.3	125
	S200N180/D42	Φ180G7	8	8	19	Φ42E8	118	□200	Φ215	Φ260	4-M12	12	45.3	125
	S200N180/D48					Φ48E8						14	51.8	
	S220N200/D42	Φ200G7	8	8	19	Φ42E8	118	□220	Φ235	Φ280	4-M12	12	45.3	125
	S220N200/D48					Φ48E8						14	51.8	
	S265N230/D42	Φ230G7	8	8	19	Φ42E8	118	□265	Φ265	Φ350	4-M12	12	45.3	125
	S265N230/D48					Φ48E8						14	51.8	

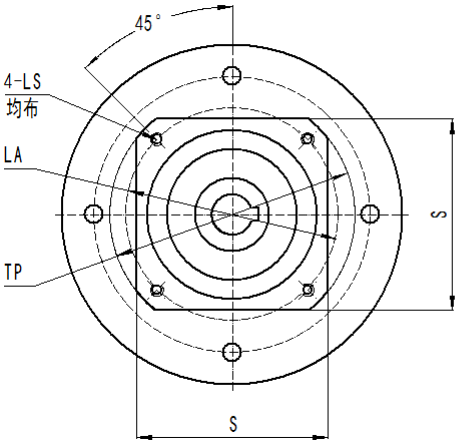

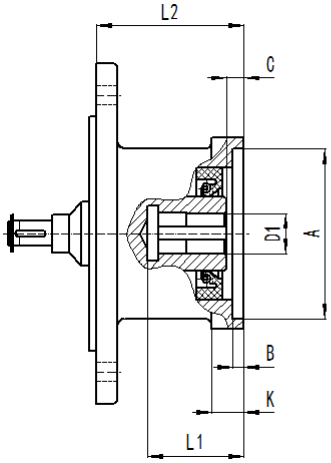

Input hole

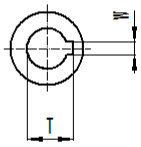

Model	Model number	A	B	C	K	D1	L1	S	LA	TP	4-LS	W	T	L2
WR91 WR97 WF97 WK97	S180N114.3/D35	Φ114.3G7	8	8	17	Φ35E8	88	□180	Φ200	Φ230	4-M12	10	38.3	95
	S180N114.3/D42				19	Φ42E8	118					12	45.3	125
	S180N114.3/D48					Φ48E8						14	51.8	
	S200N180/D35	Φ180G7	5	5	16	Φ35E8	85	□200	Φ215	Φ260	4-M12	10	38.3	92
	S200N180/D42				19	Φ42E8	118					12	41.3	125
	S200N180/D48					Φ48E8						14	51.8	
	S220N200/D35	Φ200G7	5	5	16	Φ35E8	85	□220	Φ235	Φ275	4-M12	10	38.3	92
	S220N200/D42				19	Φ42E8	118					12	45.3	125
	S220N200/D48					Φ48E8						14	51.8	
	S265N230/D42	Φ230G7	8	8	19	Φ42E8	118	□265	Φ265	Φ350	4-M12	12	45.3	125
	S265N230/D48					Φ48E8						14	51.8	

Model	Model number	A	B	C	K	D1	L1	S	LA	TP	4-LS	W	T	L2
WR101 WR107 WF107 WK107	S180N114.3/D35	Φ114.3G7	5	5	16	Φ35E8	85	□180	Φ200	Φ230	4-M12	10	38.3	92
	S180N114.3/D42				19	Φ42E8	118					12	45.3	124
	S180N114.3/D48					Φ48E8						14	51.8	
	S180N114.3/D55					Φ55E8						16	59.3	
	S200N180/D35	Φ180G7	5	5	16	Φ35E8	85	□200	Φ215	Φ270	4-M12	10	38.3	92
	S200N180/D42				19	Φ42E8	118					12	45.3	124
	S200N180/D48					Φ48E8						14	51.8	
	S200N180/D55					Φ55E8						16	59.3	
	S220N200/D35	Φ200G7	5	5	16	Φ35E8	85	□220	Φ235	Φ270	4-M12	10	38.3	92
	S220N200/D42				19	Φ42E8	118					12	45.3	124
	S220N200/D48					Φ48E8						14	51.8	
	S220N200/D55					Φ55E8						16	59.3	
	S265N230/D42	Φ230G7	8	8	19	Φ42E8	118	□265	Φ265	Φ320	4-M12	12	45.3	124
	S265N230/D48					Φ48E8						14	51.8	
	S265N230/D55					Φ55E8						16	59.3	

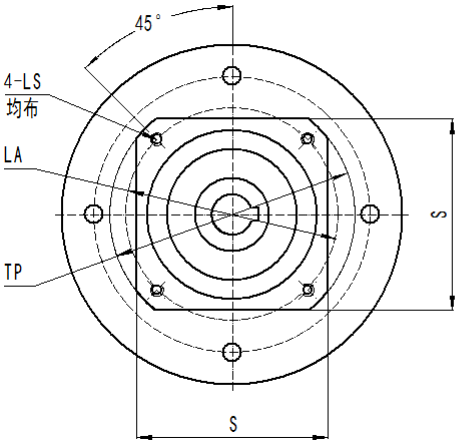

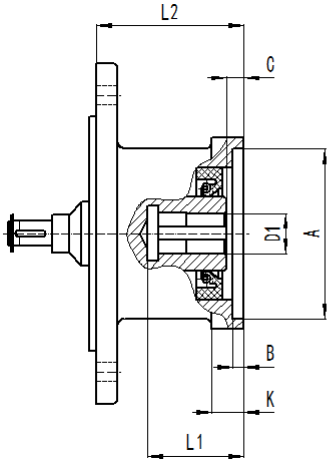

Input hole

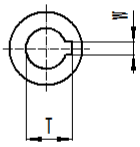

Model	Model number	A	B	C	K	D1	L1	S	LA	TP	4-LS	W	T	L2
WR137	S180N114.3/D35	Φ114.3G7	8	8	16	Φ35E8	88	□180	Φ200	Φ230	4-M12	10	38.3	95
	S180N114.3/D42				19	Φ42E8	118					12	45.3	126
	S180N114.3/D48					Φ48E8						14	51.8	
	S200N180/D35	Φ180G7	8	8	16	Φ35E8	88	□200	Φ215	Φ270	4-M12	10	38.3	95
	S200N180/D42				19	Φ42E8	118					12	45.3	126
	S200N180/D48					Φ48E8						14	51.8	
	S220N200/D35	Φ200G7	8	8	16	Φ35E8	88	□220	Φ235	Φ270	4-M12	10	38.3	95
	S220N200/D42				19	Φ42E8	118					12	45.3	126
	S220N200/D48					Φ48E8						14	51.8	
	S265N230/D42	Φ230G7	8	8	19	Φ42E8	118	□265	Φ265	Φ320	4-M12	12	45.3	126
	S265N230/D48					Φ48E8						14	51.8	
	S265N230/D55					Φ55E8						16	59.3	

Model	Model number	A	B	C	K	D1	L1	S	LA	TP	4-LS	W	T	L2
WR147 WF127	S180N114.3/D35	Φ114.3G7	8	8	16	Φ35E8	88	□180	Φ200	Φ230	4-M12	10	38.3	95
	S180N114.3/D42				19	Φ42E8	118					12	45.3	126
	S180N114.3/D48					Φ48E8						14	51.8	
	S200N180/D35	Φ180G7	8	8	16	Φ35E8	88	□200	Φ215	Φ265	4-M12	10	38.3	95
	S200N180/D42				19	Φ42E8	118					12	45.3	126
	S200N180/D48					Φ48E8						14	51.8	
	S220N200/D35	Φ200G7	8	8	16	Φ35E8	88	□220	Φ235	Φ270	4-M12	10	38.3	95
	S220N200/D42				19	Φ42E8	118					12	45.3	126
	S220N200/D48					Φ48E8						14	51.8	
	S265N230/D42	Φ230G7	8	8	19	Φ42E8	118	□265	Φ265	Φ320	4-M12	12	45.3	126
	S265N230/D48					Φ48E8						14	51.8	
	S265N230/D55					Φ55E8						16	59.3	

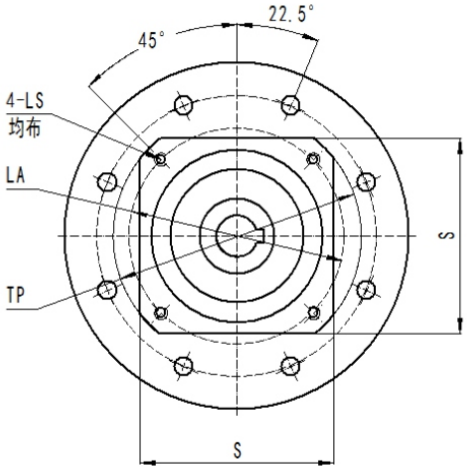

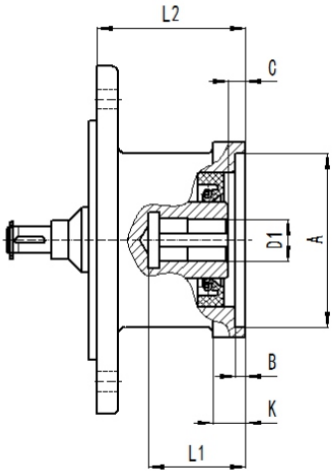

Input hole

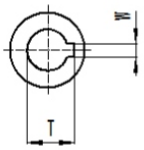

Model	Model number	A	B	C	K	D1	L1	S	LA	TP	4-LS	W	T	L2
WK127	S180N114.3/D35	Φ114.3G7	8	8	16	Φ35E8	88	□180	Φ200	Φ230	4-M12	10	38.3	95
	S180N114.3/D42				19	Φ42E8	118					12	45.3	126
	S180N114.3/D48					Φ48E8						14	51.8	
	S200N180/D35	Φ180G7	8	8	16	Φ35E8	88	□200	Φ215	Φ265	4-M12	10	38.3	95
	S200N180/D42				19	Φ42E8	118					12	41.3	126
	S200N180/D48					Φ48E8						14	51.8	
	S220N200/D35	Φ200G7	8	8	16	Φ35E8	88	□220	Φ235	Φ270	4-M12	10	38.3	95
	S220N200/D42				19	Φ42E8	118					12	45.3	126
	S220N200/D48					Φ48E8						14	51.8	
	S220N200/D55					Φ55E8						16	59.3	
	S265N230/D42	Φ230G7	8	8	19	Φ42E8	118	□265	Φ265	Φ320	4-M12	12	41.3	126
	S265N230/D48					Φ48E8						14	51.8	
	S265N230/D55					Φ55E8						16	59.3	

3.4 Dimension sheets of input shaft

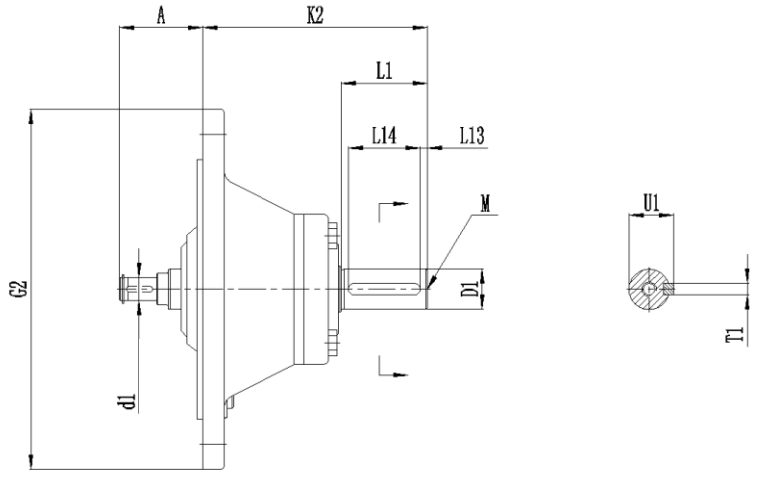

Model	Type of AD	D1	K2	L1	L13	L14	M	T1	U1
R..37、R..17F F..37、F..47 K..37	AD1	Φ16k6	102	40	4	32	M5	5	18
	AD2	Φ19k6	129	40	4	32	M6	6	21.5
RX..57、RX..67 R..47、R..57、R..67 F..57、F..67 K..47、K..57、K..67	AD2	Φ19k6	123	40	4	32	M6	6	21.5
	AD3	Φ24k6	159	50	5	40	M8	8	27
RX..77 R..77 F..77 K..77	AD2	Φ19k6	115	40	4	32	M6	6	21.5
	AD3	Φ24k6	151	50	5	40	M8	8	27
	AD4	Φ38k6	224	80	7	70	M12	10	41
RX..87 R..87 F..87 K..87	AD2	Φ19k6	110	40	4	32	M6	6	21.5
	AD3	Φ28k6	156	60	5	50	M10	8	31
	AD4	Φ38k6	219	80	7	70	M12	10	41
	AD5	Φ42k6	292	110	10	70	M16	12	45
RX..97 R..97 F..97 K..97	AD3	Φ28k6	151	60	5	50	M10	8	31
	AD4	Φ38k6	214	80	7	70	M12	10	41
	AD5	Φ42k6	287	110	10	70	M16	12	45
	AD6	Φ48k6	327	110	10	80	M16	14	51.5

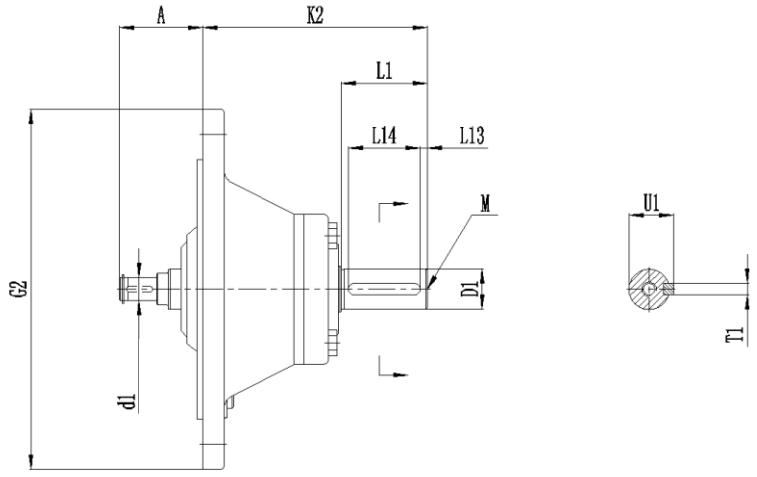

Model	Type of AD	D1	K2	L1	L13	L14	M	T1	U1
RX..107 R..107 F..107 K..107	AD3	Φ28k6	145	60	5	50	M10	8	31
	AD4	Φ38k6	208	80	7	70	M12	10	41
	AD5	Φ42k6	281	110	10	70	M16	12	45
	AD6	Φ48k6	321	110	10	80	M16	14	51.5
R..137	AD4	Φ38k6	201	80	7	70	M12	10	41
	AD5	Φ42k6	274	110	10	70	M16	12	45
	AD6	Φ48k6	314	110	10	80	M16	14	51.5
	AD7	Φ55m6	308	110	10	90	M20	16	59
R..147 F..127 K..127	AD4	Φ38k6	193	80	7	70	M12	10	41
	AD5	Φ42k6	266	110	10	70	M16	12	45
	AD6	Φ48k6	306	110	10	80	M16	14	51.5
	AD7	Φ55m6	300	110	10	90	M20	16	59
	AD8	Φ70m6	383	140	15	110	M20	20	74.5
R..167 F..157 K..157、K..167、K..187	AD5	Φ42k6	258	110	10	70	M16	12	45
	AD6	Φ48k6	298	110	10	80	M16	14	51.5
	AD7	Φ55m6	292	110	10	90	M20	16	59
	AD8	Φ70m6	374	140	15	110	M20	20	74.5

4. Motor dimension sheets

4.1 Standard B5 motor.. dimension sheets

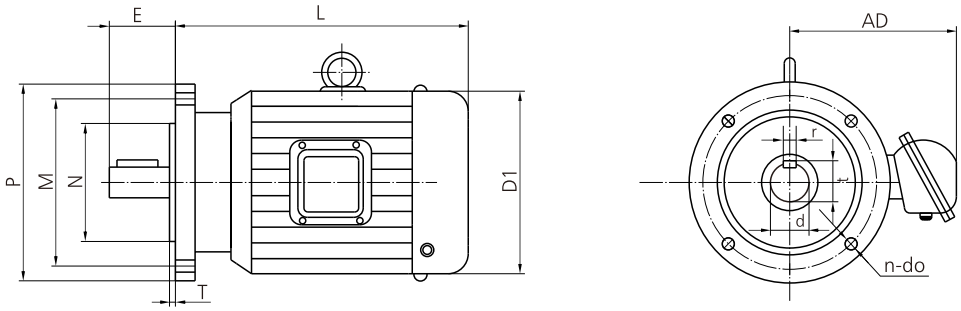

motor	motor power and poles			Size											
type	4P	6P	8P	M	N (JS6)	P	T	n-do	d	E	r	t	D1	AD	L
Y56	0.09 0.12			100	80	120	3	4 × 9	9j6	20	3	11.2	115	90	190
Y63	0.12 0.18			115	95	140	3	4 × 10	11j6	23	4	12.5	130	70	217
Y71	0.25 0.37	0.18 0.25		130	110	160	3.5	4 × 10	14j6	30	5	16	145	80	225
Y80	0.55 0.75	0.37 0.55	0.18 0.25	165	130	200	3.5	4 × 10	19j6	40	6	21.5	165	150	225
90S	1.1	0.75	0.37	165	130	200	3.5	4 × 10	24j6	50	8	27	175	155	270
90L	1.5	1.1	0.55	165	130	200	3.5	4 × 10	24j6	50	8	27	175	155	295
100L1	2.2	1.5	0.75	215	180	250	4	4 × 15	28j6	60	8	31	215	180	325
100L2	3.0		1.1	215	180	250	4	4 × 15	28j6	60	8	31	215	180	325
112M	4.0	2.2	1.5	215	180	250	4	4 × 15	28j6	60	8	31	240	190	345
132S	5.5	3.0	2.2	265	230	300	4	4 × 15	38K6	80	10	41	275	210	390
132M	7.5	4.0 5.5	3.0	265	230	300	4	4 × 15	38K6	80	10	41	275	210	410
160M	11	7.5	4.0 5.5	300	250	350	5	4 × 19	42K6	110	12	46	330	255	505
160L	15	11	7.5	300	250	350	5	4 × 19	42K6	110	12	46	330	255	505
180M	18.5			300	250	350	5	4 × 19	48K6	110	14	51.5	380	280	590
180L	22	15	11	300	250	350	5	4 ×19	48K6	110	14	51.5	380	280	630
200L	30	18.5 22	15	350	300	400	5	4 ×19	55M6	110	16	59	420	305	660
225S	37		18.5	400	350	450	5	4 × 19	60m6	140	18	53	450	345	680
225M	45	30	22	400	350	450	5	8 × 19	55m6 / 60m6	110 / 140	16	18	60	65	450	345	705
250M	55	37	30	500	450	550	5	8 × 19	60m6 / 65m6	140	18	18	65	70	510	370	770
280S	75	45	37	500	450	550	5	8 × 19	65m6 / 75m6	140	18	20	70	80	580	410	845
280M	90	55	45	500	450	550	5	8 × 19	65m6 / 75m6	140	18	20	70	80	580	410	895
315S	110	75		600	550	660	6	8 × 24	65m6 / 80m6	140 / 170	18	22	70	87	645	530	1020 1130
315M	132	90		600	550	660	6	8 × 24	65m6 / 80m6	140 / 170	18	22	70	87	645	530	1050 1160

4.2 Direct-connected motor...Dimemsions

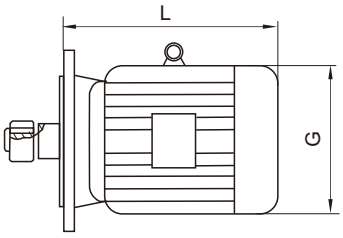

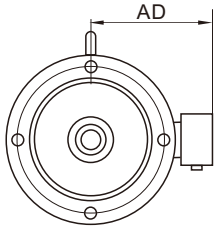

Motor baseframe type	Motor power and poles(kW)			Models of Speed Reducers	Size(mm)		
	4P	6P	8P		L	G	AD
Y71	0.25 0.37	0.18 0.25		WR(51,61) WR(17,27,37,47,57,67) WF(37,47,57,67) WK(37,47,57,67)	245	145	80
				WR..71,WR77,WF77,WK77	233		
Y80	0.55 0.75	0.37 0.55	0.18 0.25	WR(51,61,71) WR(17,27,37,47,,57,67,77) WF(37,47,57,67,77) WK(37,47,57,67,77)	278	165	150
				WR(81,91) WR(87,97) WF87 WK87	246		
Y90S	1.1	0.75	0.37	WR(51,61,71) WR(27,37,47,57,67,77) WF(37,47,57,67,77) WK(37,47,57,67,77)	304	175	155
				WR(81,91) WR(87,97) WF(87,97) WK(87,97)	280		
Y90L	1.5	1.1	0.55	WR(51,61,71) WR(27,37,47,57,67,77) WF(37,47,57,67,77) WK(37,47,57,67,77)	328	175	155
				WR(81,91) WR(87,97) WF(87,97) WK(87,97)	304		
Y100	2.2 3	1.5	0.75 1.1	WR27,WR37,WF37,WF47,WK37	340	215	180
				WR(51,61,71,81) WR(47,57,67,77,87) WF(57,67,77,87) WK(47,57,67,77,87)	350		
				WR91 WR97 WF97 WK97	315		
				WR101 WR107 WF107 WK107	318		
Y112	4	2.2	1.5	WR(51,61,71,81) WR(47,57,67,77,87) WF(57,67,77,87) WK(57,67,77,87)	380	240	190
				WR(91,101) WR(97,107) WF(97,107) WK(97,107)	334		
Y132S	5.5	3	2.2	WR(51,61,71,81,91) WR(47,57,67,77,87,97) WF(67,77,87,97) WK(67,77,87,97)	425	275	210
				WR101,WR107,WF107,WK107	386		
				WR137	388		
Y132M	7.5	4 5.5	3	WR(51,61,71,81,91) WR(47,57,67,77,87,97) WF(67,77,87,97,107) WK(67,77,87,97)	461	275	210
				WR101,WR107,WF107,WK107	422		
				WR137,WR147,WF127,WK127	424		

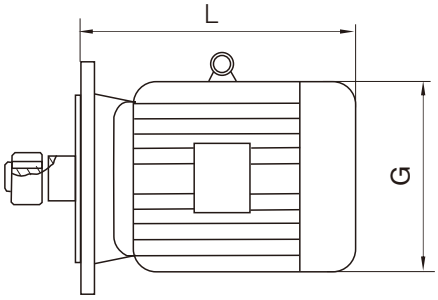

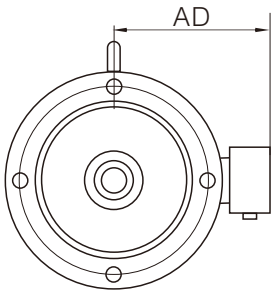

Motor baseframe type	Motor power and poles(kW)			Models of Speed Reducers	Size(mm)		
	4P	6P	8P		L	G	AD
Y160M	11	7.5	4 5.5	WR(71,81,91) WR(77,87,97) WF(77,87,97) WK(77,87,97)	524	330	255
				WR101,WR107,WF107,WK107	504		
				WR137	476		
				WK(127,157,167,187) WR(147,167) WF(127,157)	567		
Y160L	15	11	7.5	WR(81,91) WR(87,97) WF(87,97,107) WK(87,97)	547	330	255
				WR101,WR(107,137),WF107,WK107	519		
				WR(147,167) WK(127,157,167,187) WF(127,157)	602		
Y180M	18.5			WR81,WR87,WF87,WK87	583	380	280
				WR(91,101) WR(97,107,137) WF(97,107) WK(97,107)	555		
				WR147,WK127,WF127	583		
				WR167,WK(157,167,187),WF157	635		
Y180L	22	15	11	WR81,WR87,WF87,WK87	616	380	280
				WR(91,101) WR(97,107,137) WF(97,107) WK(97,107)	588		
				WR147,WK127,WF127	616		
				WR167,WK(157,167,187),WF157	666		

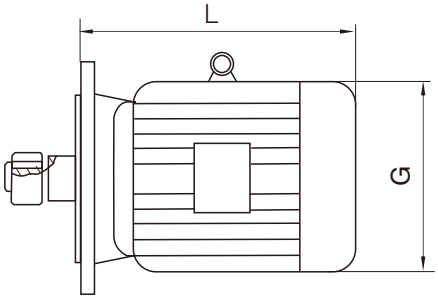

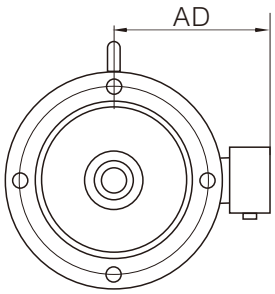

Motor baseframe type	Motor power and poles(kW)			Models of Speed Reducers	Size(mm)		
	4P	6P	8P		L	G	AD
Y200L	30	18.5 22	15	WR(91,101) WR(97,107) WF(97,107) WK(97,107)	654	420	305
				WR137,WR147,WK127,WF127	654		
				WR167,WK(157,167,187),WF157	642		
Y225S	37		18.5	WR101,WR107,WR137,WF107,WK107	680	450	345
				WR147,WK127,WF127	674		
				WR167,WK(157,167,187),WF157	669		
Y225M	45	30	22	WR101,WR107,WR137,WF107,WK107	702	450	345
				WR147,WK127,WF127	696		
				WR167,WK(157,167,187),W157	691		
Y250M	55	37	30	WR137,WR147,WK127,WF127	775	510	370
				WR167,WK(157,167,187),WF157	770		
Y280S	75	45	37	WR(147,167),WK(127,157,167,187),WF(127,157)	828	580	410
Y280M	90	55	45	WR(147,167),WK(127,157,167,187),WF(127,157)	879	580	410
Y315S	110	75	55	WR167,WK(157,167,187),WF157	1100	645	530
Y315M	132	90	75	WR167,WK(157,167,187),WF157	1180	645	530
Y315L1	160	110	90	WR167,WK(157,167,187),WF157	1270	645	530
Y315L2	200	132	110	WR167,WK(157,167,187),WF157	1270	645	530

WMR Series

Modular Helical Gearbox

- Based on design of the traditional helical gearbox, as well as to meet strong market demand, WUMA combines the European advanced technical experience, after three years reserch and development, MR series modular gearbox access to market successfully.

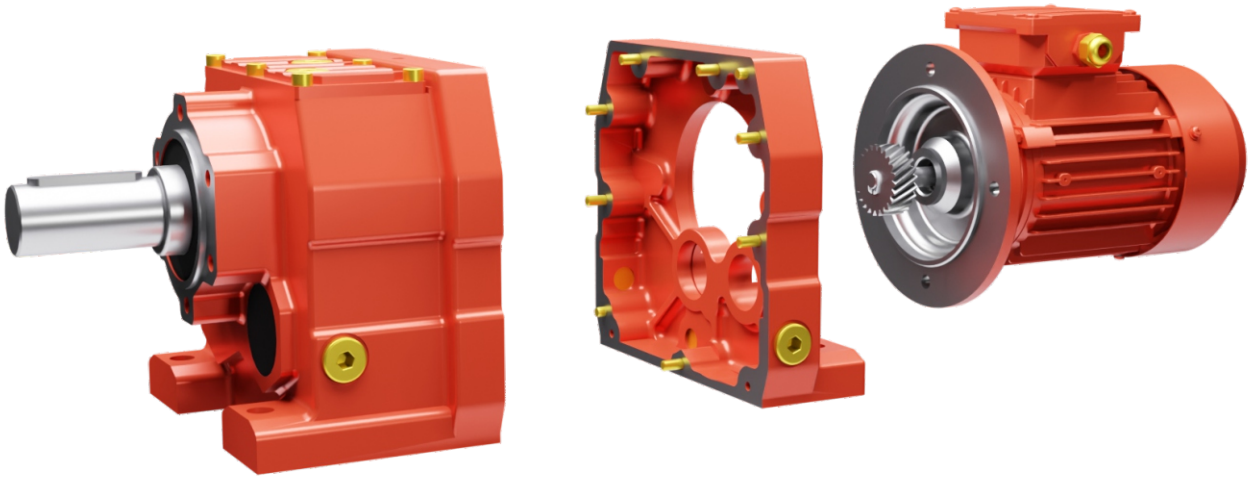

Characteristics

- Saving the inventory investment and warehouse space.
- High transmisson efficiency, the single machine can reach as much as 96%.
- Modularity allows distributors creat any new ratio quickly and flexibly by themselves to shorten the lead time greatly.
- Modular design can provide various kinds of ratio combination only through the simple transformation of high speed gears.

The product structure

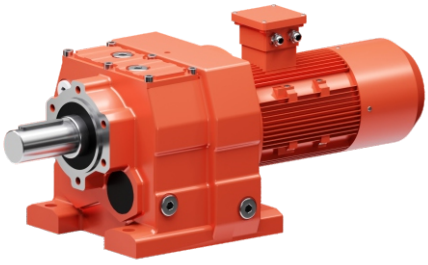

WMR Series

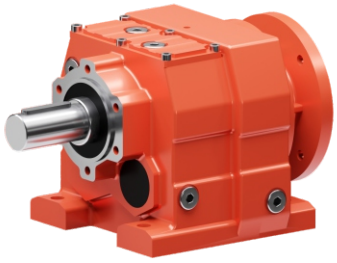

WMR with IEC input flange
B5/B14 input flange

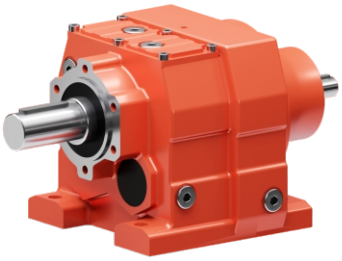

WMR..S Series

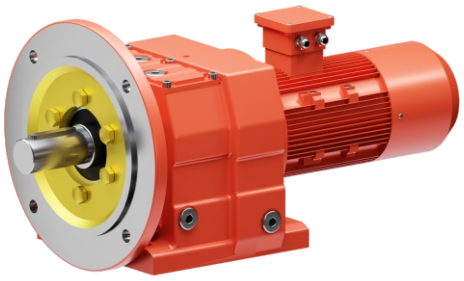

WMRF Series

Working Environment

- Without industry limitation.
- Suitable for normal-reverse rotation.
- The working place should be lower than 1,000 meters above sea-level.
- Please consult our technical supporting deparment for other circumstances.
- Working temperature:-40℃~50℃（The lubrication should be heated until above 0℃ if temperature below 0℃.）
- The input speed should be less than 3,000 r/m,the circumferential speed of the gear should not exceed 20m/s.

Product Disassembly Graph

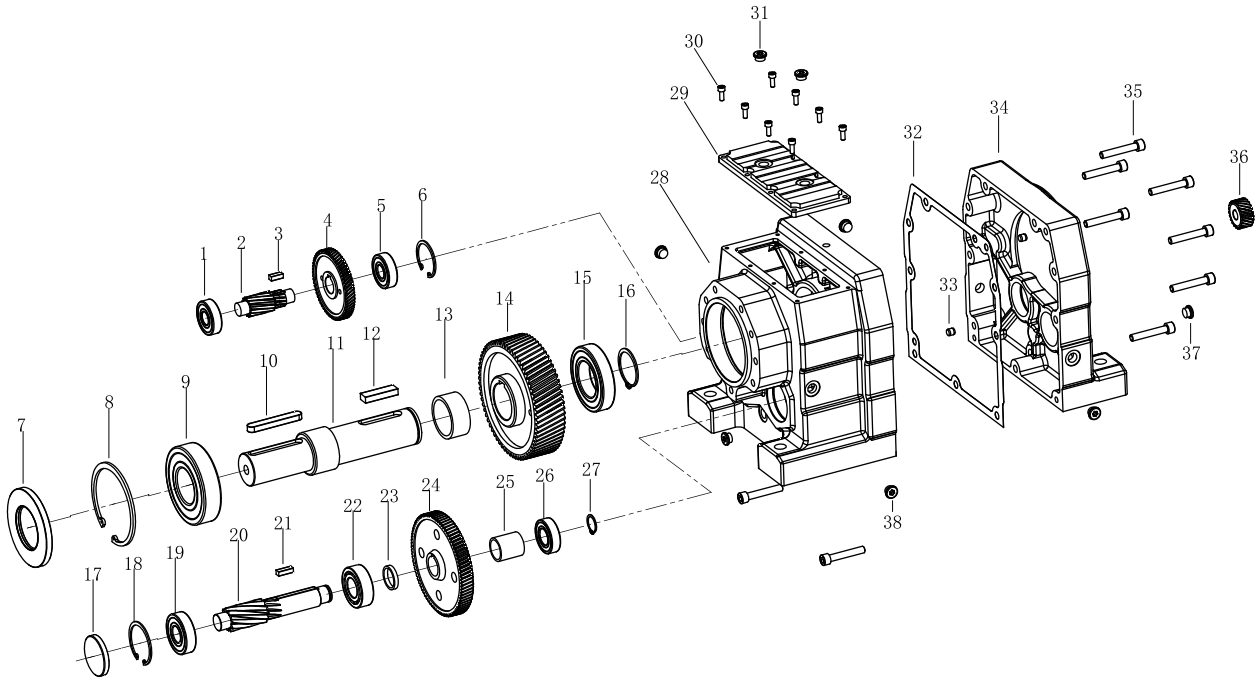

1	Bearing	11	Output shaft	21	Key	31	Breather vent
2	Gear shaft	12	Key	22	Bearing	32	Paper seal
3	Key	13	Adjusting ring	23	Adjusting ring	33	Round pin
4	Gear	14	Gear	24	Gear	34	Housing B
5	Bearing	15	Bearing	25	Adjusting ring	35	Screw
6	Circlip for hole	16	Circlip for shaft	26	Bearing	36	Gear
7	Oil seal	17	Seal cover	27	Circlip for shaft	37	Oil plug
8	Circlip for hole	18	Circlip for hole	28	Housing A	38	Oil sight glass
9	Bearing	19	Bearing	29	Housing cover		
10	Key	20	Gear shaft	30	Screw		

WMR37 RATIO MATCH TABLE

Motor power range(KW)	Ratio	First stage-small gear	63 type	71 type	80 type	90 type	100 type	First stage-big gear	Second stage gear shaft and gear	Basic Modular
0.12-0.18	134.82	X1014	10					D0411014058	R36-13.1(14/77) ZR36-14.1(77/14)	C
0.12-0.18	123.66	X1015	10					D0411015057		
0.12-0.25	105.28	X1017	10	10				D0411017055		
0.12-0.25	90.77	X1019	10	10				D0411019053		
0.12-0.25	84.61	X1020	10	10				D0411020052		
0.12-0.37	73.96	X1022	10	10				D0411022050		
0.18-0.37	69.33	X1023	10	10				D0411023049		
0.18-0.37	61.18	X1025	10	10				D0411025047		
0.18-0.55	55.76	X1017	10	10	12			D0411017055	R36-13.2(23/67) ZR36-14.2(67/23)	
0.18-0.55	48.08	X1019	10	10	12			D0411019053		
0.25-0.55	44.81	X1020		10	12			D0411020052		
0.25-0.75	39.17	X1022		10	12			D0411022050		
0.25-0.75	36.72	X1023		10	12			D0411023049		
0.25-0.75	32.40	X1025		10	12			D0411025047		
0.37-1.1	28.73	X1027		10	12	14		D0411027045		
0.37-1.1	24.42	X1224		10	12	14		D0411224034		
0.37	28.32	X1014		10				D0461014067	/	
0.37	26.03	X1015		10				D0461015066		
0.37	22.27	X1017		10				D0461017064		
0.37-1.5	19.31	X1019		10	12	14		D0461019062		
0.37-1.5	18.05	X1020		10	12	14		D0461020061		
0.37-1.5	15.60	X1022		10	12	14		D0461022058		
0.37-2.2	13.25	X1025		10	12	14	16	D0461025056		
0.37-2.2	11.83	X1027		10	12	14	16	D0461027054		
0.75-2.2	10.11	X1224			12	14	16	D0461224041		
0.75-2.2	9.47	X1225			12	14	16	D0461225040		
1.1-3.0	7.97	X1523				14	16	D0461523031		
1.1-3.0	6.67	X1022				14	16	D0461022058		D
1.1-3.0	5.67	X1025				14	16	D0461025056		
1.1-3.0	5.06	X1027				14	16	D0461027054		
1.5-3.0	4.32	X1224				14	16	D0461224041		
1.5-3.0	4.05	X1225				14	16	D0461225040		
1.5-3.0	3.41	X1523				14	16	D0461523031		

E X A
F Y B
G Z
H V

Selection of instruction:

1. The basic gearboxes=E+X+A+C, or F+Y+B+C, or G+Z+C,or H+V+D (with extra IEC input flange)

E+X+A+C,collocate ratio from 61.18 to 134.82.
F+Y+B+C,collocate ratio from 24.42 to 55.76.
G+Z+C,collocate ratio from 7.97 to 28.32.
H+V+D,collocate ratio from 3.41 to 6.67.

2. E.g: if you need to collocate ratio 10.11, you should choose basic modular C
with First stage-small gear G(X1224) and first stage big gear Z(D0461224041)
if you need to collocate ratio 55.76, you should choose basic modular C
with Second stage gear shaft B(R36-13.2(23/67)) and Second stage gear(ZR36-14.2(67/23)),
and First stage-small gear F(X1017) with first stage big gear Y(D0411017055)

3. Diameter of first stage-small gear depends on motor size.

WMR47 RATIO MATCH TABLE

Motor power range(KW)	Ratio	First stage-small gear	63 type	71 type	80 type	90 type	100 type	112 type	132 type	First stage-big gear	Second stage gear shaft and gear	Basic Modular
0.12	176.88	X1014	10							D0521014077	R46-13.1(17/89) ZR46-14.1(89/17)	C
0.12-0.25	162.94	X1015	10	10						D0521015076		
0.12-0.25	139.99	X1017	10	10						D0521017074		
0.12-0.37	121.87	X1019	10	10						D0521019072		
0.12-0.37	114.17	X1020	10	10						D0521020071		
0.12-0.37	100.86	X1022	10	10						D0521022069		
0.12-0.37	93.68	X1023	10	10						D0521023067		
0.18-0.37	84.90	X1025	10	10						D0521025066		
0.18-0.55	76.23	X1027	10	10	12					D0521027064		
0.25-0.55	68.54	X1019		10	12					D0521019072	R46-13.2(18/53) ZR46-14.2(53/18)	
0.25-0.55	64.21	X1020		10	12					D0521020071		
0.25-0.75	56.73	X1022		10	12					D0521022069		
0.25-0.75	52.69	X1023		10	12					D0521023067		
0.25-0.75	47.75	X1025		10	12					D0521025066		
0.37-1.1	42.87	X1027		10	12	14				D0521027064		
0.37-1.1	36.93	X1224		10	12	14				D0521224049		
0.37-1.1	34.73	X1225		10	12	14				D0521225048		
0.55-1.5	29.88	X1523			12	14				D0521523038		
0.55-1.5	26.70	X1721			12	14				D0521721031		
0.75-1.5	23.59	X1723			12	14				D0521723030		
0.37	33.79	X1014		10						D0521014077	/	
0.37	31.12	X1015		10						D0521015076		
0.37-0.75	26.74	X1017		10	12					D0521017074		
0.37-1.5	23.28	X1019		10	12	14				D0521019072		
0.37-1.5	21.81	X1020		10	12	14				D0521020071		
0.75-2.2	19.27	X1022			12	14	16			D0521022069		
0.75-2.2	17.89	X1023			12	14				D0521023067		
0.75-2.2	16.22	X1025			12	14	16			D0521025066		
1.1-2.2	14.56	X1027				14	16			D0521027064		
1.1-3.0	12.54	X1224				14	16			D0521224049		
1.1-3.0	11.79	X1225				14	16			D0521225048		
1.1-3.0	10.15	X1523				14	16			D0521523038		
1.1-3.0	9.07	X1721				14	16			D0521721031		
2.2-4.0	8.01	X1723					16	18		D0521723030		
2.2-4.0	7.76	X1025					16	18		D0521025066		D
2.2-4.0	6.96	X1027					16	18		D0521027064		
2.2-4.0	6.00	X1224					16	18		D0521224049		
2.2-4.0	5.64	X1225					16	18		D0521225048		
2.2-4.0	4.85	X1523					16	18		D0521523038		
2.2-4.0	4.34	X1721					16	18		D0521721031		
2.2-5.5	3.83	X1723					16	18	22	D0521723030		

Selection of instruction:

1. The basic gearboxes=E+X+A+C, or F+Y+B+C, or G+Z+C,or H+V+D (with extra IEC input flange)

E+X+A+C,collocate ratio from 76.23 to 176.88.
F+Y+B+C,collocate ratio from 23.59 to 68.54.
G+Z+C,collocate ratio from 8.01 to 33.79.
H+V+D,collocate ratio from 3.83 to 7.76.

2. E.g: if you need to collocate ratio 7.76,you should choose basic modular D
with First stage-small gear H(1025) and first stage big gear V(D0721523062)
if you need to collocate ratio 42.87,you should choose basic modular C
with Second stage gear shaft B(R46-13.2(18/53))and Second stage gear(ZR46-14.2(53/18)),
and First stage-small gear F(X1027) with first stage big gear Y(D0521027064)

3.Diameter of first stage-small gear depends on motor size.

WMR57 RATIO MATCH TABLE

Motor power range(KW)	Ratio	First stage-small gear	63 type	71 type	80 type	90 type	100 type	112 type	132 type	First stage-big gear	Second stage gear shaft and gear	Basic Modular
0.12-0.37	186.89	X1014	10	10						D0521014077	R56-13.1(13/76) ZR56-14.1(76/13)	C
0.12-0.37	172.17	X1015	10	10						D0521015076		
0.12-0.37	147.92	X1017	10	10						D0521017074		
0.12-0.37	128.77	X1019	10	10						D0521019072		
0.18-0.55	120.63	X1020	10	10	12					D0521020071		
0.18-0.55	106.58	X1022	10	10	12					D0521022069		
0.18-0.55	98.99	X1023	10	10	12					D0521023067		
0.18-0.75	89.71	X1025	10	10	12					D0521025066		
0.25-0.75	80.55	X1027	10	10	12					D0521027064		
0.25-0.75	69.23	X1019		10	12					D0521019072	R56-13.2(21/66) ZR56-14.2(66/21)	
0.37-0.75	64.85	X1020		10	12					D0521020071		
0.37-1.1	57.29	X1022		10	12	14				D0521022069		
0.37-1.1	53.22	X1023		10	12	14				D0521023067		
0.37-1.1	48.23	X1025		10	12	14				D0521025066		
0.55-1.5	43.30	X1027			12	14				D0521027064		
0.55-1.5	37.30	X1224			12	14				D0521224049		
0.55-1.5	35.07	X1225			12	14				D0521225048		
0.75-2.2	30.18	X1523			12	14	16			D0521523038		
0.75-2.2	26.97	X1721			12	14	16			D0521721031		
0.75-1.5	26.31	X1019			12	14				D0601019086	/	
0.75-1.5	24.99	X1020			12	14				D0601020086		
0.75-3.0	21.93	X1022			12	14	16			D0601022083		
0.75-3.0	18.60	X1025			12	14	16			D0601025080		
1.1-4.0	16.79	X1027				14	16	18		D0601027078		
1.5-4.0	14.77	X1224				14	16	18		D0601224061		
1.5-4.0	13.95	X1225				14	16	18		D0601225060		
1.5-5.5	11.88	X1523				14	16	18	22	D0601523047		
2.2-5.5	10.79	X1721					16	18	22	D0601721039		
2.2-5.5	9.35	X1723					16	18	22	D0601723037		
2.2-4.0	9.06	X1027					16	18		D0601027078		D
2.2-5.5	7.97	X1224					16	18	22	D0601224061		
3.0-7.5	7.53	X1225					16	18	22	D0601225060		
3.0-7.5	6.41	X1523					16	18	22	D0601523047		
3.0-7.5	5.82	X1721					16	18	22	D0601721039		
3.0-7.5	5.05	X1723					16	18	22	D0601723037		
3.0-7.5	4.39	X1725					16	18	22	D0601725035		

Selection of instruction:

1. The basic gearboxes=E+X+A+C, or F+Y+B+C, or G+Z+C,or H+V+D (with extra IEC input flange)

E+X+A+C,collocate ratio from 80.55 to 186.89
F+Y+B+C,collocate ratio from 26.97 to 69.23
G+Z+C,collocate ratio from 9.35 to 26.31
H+V+D,collocate ratio from 4.39 to 9.06

2. E.g: if you need to collocate ratio 7.97,you should choose basic modular D
with First stage-small gear H(X1224) and first stage big gear V(D0601224061)
if you need to collocate ratio 48.23,you should choose basic modular C
with Second stage gear shaft B(R46-13.2(18/53))and Second stage gear(ZR46-14.2(53/18)),
and First stage-small gear F(X1025) with first stage big gear Y(D0521025066)

3.Diameter of first stage-small gear depends on motor size.

WMR67 RATIO MATCH TABLE

Motor power range(KW)	Ratio	First stage-small gear	63 type	71 type	80 type	90 type	100 type	112 type	132 type	First stage-big gear	Second stage gear shaft and gear	Basic Modular
0.12-0.37	199.81	X1014	10	10						D0521014077	R56-13.1(13/76) ZR56-14.1(76/13)	C
0.12-0.37	184.07	X1015	10	10						D0521015076		
0.18-0.55	158.14	X1017	10	10	12					D0521017074		
0.18-0.55	137.67	X1019	10	10	12					D0521019072		
0.18-0.55	128.97	X1020	10	10	12					D0521020071		
0.18-0.75	113.94	X1022	10	10	12					D0521022069		
0.18-0.75	105.83	X1023	10	10	12					D0521023067		
0.25-0.75	95.91	X1025		10	12					D0521025066		
0.25-1.1	86.11	X1027		10	12	14				D0521027064		
0.37-1.1	74.17	X1224		10	12	14				D0521224049		
0.37-1.1	69.75	X1225		10	12	14				D0521225048		
0.37-1.5	61.26	X1022		10	12	14				D0521022069	R56-13.2(21/66) ZR56-14.2(66/21)	
0.37-1.5	56.89	X1023		10	12	14				D0521023067		
0.75-1.5	51.56	X1025			12	14				D0521025066		
0.75-1.5	46.29	X1027			12	14				D0521027064		
1.1-2.2	39.88	X1224				14	16			D0521224049		
1.1-2.2	37.50	X1225				14	16			D0521225048		
1.1-2.2	32.27	X1523				14	16			D0521523038		
1.1-2.2	28.83	X1721				14	16			D0521721031		
1.1-1.5	28.13	X1019				14				D0601019086	/	
1.1-1.5	26.72	X1020				14				D0601020086		
1.1-3.0	23.44	X1022				14	16			D0601022083		
1.1-4.0	19.89	X1025				14	16	18		D0601025080		
1.5-4.0	17.95	X1027				14	16	18		D0601027078		
2.2-5.5	15.79	X1224					16	18	22	D0601224061		
2.2-5.5	14.91	X1225					16	18	22	D0601225060		
2.2-5.5	12.70	X1523					16	18	22	D0601523047		
2.2-5.5	11.54	X1721					16	18	22	D0601721039		
2.2-7.5	10.00	X1723					16	18	22	D0601723037		
2.2-7.5	8.70	X1725					16	18	22	D0601725035		
2.2-7.5	7.79	X1224					16	18	22	D0601224061		D
4.0-7.5	7.36	X1225						18	22	D0601225060		
4.0-7.5	6.27	X1523						18	22	D0601523047		
4.0-7.5	5.70	X1721						18	22	D0601721039		
4.0-7.5	4.93	X1723						18	22	D0601723037		
4.0-7.5	4.29	X1725						18	22	D0601725035		

Selection of instruction:

1. The basic gearboxes=E+X+A+C, or F+Y+B+C, or G+Z+C,or H+V+D (with extra IEC input flange)

E+X+A+C,collocate ratio from 69.75 to 199.81.
F+Y+B+C,collocate ratio from 28.83 to 61.26.
G+Z+C,collocate ratio from 8.70 to 28.13.
H+V+D,collocate ratio from 4.29 to 7.79.

2. E.g: if you need to collocate ratio 10.00,you should choose basic modular C
with First stage-small gear G(1723) and first stage big gear Z(D0601723037)
if you need to collocate ratio 51.56,you should choose basic modular C
with Second stage gear shaft B(R56-13.2(21/66)) and Second stage gear(ZR56-14.2(66/21)),
and First stage-small gear F(X1025) with first stage big gear Y(D0521025066)

3.Diameter of first stage-small gear depends on motor size.

WMR77 RATIO MATCH TABLE

Motor power range(KW)	Ratio	First stage-small gear	63 type	71 type	80 type	90 type	100 type	112 type	132 type	160 type	First stage-big gear	Second stage gear shaft and gear	Basic Modular
0.18-0.55	195.24	X1015	10	10							D0601015091		
0.18-0.75	166.59	X1017	10	10	12						D0601017088		
0.18-0.75	145.67	X1019	10	10	12						D0601019086		
0.18-0.75	138.39	X1020	10	10	12						D0601020086		
0.25-0.75	121.42	X1022		10	12						D0601022083	R76-13.1(16/89) ZR76-14.1(89/16)	
0.37-1.1	102.99	X1025		10	12	14					D0601025080		
0.37-1.1	92.97	X1027		10	12	14					D0601027078		
0.55-1.5	81.80	X1224			12	14					D0601224061		
0.55-1.5	77.24	X1225			12	14					D0601225060		
0.55-1.5	65.77	X1523			12	14					D0601523047		
0.75-2.2	57.68	X1025			12	14	16				D0601025080		
0.75-2.2	52.07	X1027			12	14	16				D0601027078		
0.75-2.2	45.81	X1224			12	14	16				D0601224061		
0.75-3.0	43.26	X1225			12	14	16				D0601225060	R76-13.2(26/81) ZR76-14.2(81/26)	
1.1-3.0	36.83	X1523				14	16				D0601523047		
1.1-3.0	33.47	X1721				14	16				D0601721039		
1.5-4.0	29.00	X1723				14	16	18			D0601723037		
1.5-4.0	25.23	X1725				14	16	18			D0601725035		
1.5-4.0	23.37	X1025				14	16	18			D0721025101		
1.5-4.0	21.43	X1027				14	16	18			D0721027100		
1.5-5.5	18.80	X1224				14	16	18	22		D0721224078		
2.2-5.5	17.82	X1225					16	18	22		D0721225077		
2.2-7.5	15.60	X1523					16	18	22		D0721523062		
2.2-7.5	14.05	X1721					16	18	22		D0721721051		
3.0-7.5	12.33	X1723					16	18	22		D0721723049	/	
3.0-7.5	10.88	X1725					16	18	22		D0721725047		
3.0-7.5	9.64	X1727					16	18	22		D0721727045		
3.0-7.5	8.59	X1523					16	18	22		D0721523062		
3.0-11	7.74	X1721					16	18	22	28	D0721721051		
3.0-11	6.79	X1723					16	18	22	28	D0721723049		
4.0-11	5.99	X1725						18	22	28	D0721725047		
4.0-11	5.31	X1727						18	22	28	D0721727045		

Selection of instruction:

1. The basic gearboxes=E+X+A+C, or F+Y+B+C, or G+Z+C,or H+V+D (with extra IEC input flange)

E+X+A+C,collocate ratio from 65.77 to 195.24.
F+Y+B+C,collocate ratio from 25.23 to 57.68.
G+Z+C,collocate ratio from 9.64 to 23.37.
H+V+D,collocate ratio from 5.31 to 8.59.

2. E.g: if you need to collocate ratio 8.59,you should choose basic modular D
with First stage-small gear H(1523) and first stage big gear V(D0721523062)
if you need to collocate ratio 29.00,you should choose basic modular C
with Second stage gear shaft B(R76-13.2(26/81))and Second stage gear(ZR76-14.2(81/26)),
and First stage-small gear F(X1723) with first stage big gear Y(D0601723037)

3.Diameter of first stage-small gear depends on motor size.

WMR87 RATIO MATCH TABLE

Motor power range(KW)	Ratio	First stage-small gear	80 type	90 type	100 type	112 type	132 type	160 type	180 type	First stage-big gear	Second stage gear shaft and gear	Basic Modular
0.55-0.75	246.31	X1017	12							D0721017109	R86-13.1(14/87) ZR86-14.1(87/14)	C
0.55-1.1	216.34	X1019	12	14						D0721019107		
0.55-1.1	205.52	X1020	12	14						D0721020107		
0.55-1.1	181.60	X1022	12	14						D0721022104		
0.55-1.5	155.20	X1025	12	14						D0721025101		
0.55-1.5	142.28	X1027	12	14						D0721027100		
0.55-1.5	124.85	X1224	12	14						D0721224078		
0.55-1.5	118.32	X1225	12	14						D0721225077		
0.55-2.2	103.56	X1523	12	14	16					D0721523062		
0.75-2.2	93.29	X1721	12	14	16					D0721721051		
1.1-2.2	81.84	X1723		14	16					D0721723049		
1.1-3.0	72.50	X1027		14	16					D0721027100	R86-13.2(24/76) ZR86-14.2(76/24)	
1.1-3.0	63.62	X1224		14	16					D0721224078		
1.1-4.0	60.29	X1225		14	16	18				D0721225077		
1.1-4.0	52.77	X1523		14	16	18				D0721523062		
1.5-4.0	47.54	X1721		14	16	18				D0721721051		
1.5-5.5	41.70	X1723		14	16	18	22			D0721723049		
1.5-5.5	36.80	X1725		14	16	18	22			D0721725047		
2.2-7.5	32.63	X1727			16	18	22			D0721727045		
3.0-7.5	27.86	X2026			16	18	22			D0722026037		
2.2-4.0	34.37	X1025			16	18				D0931025139	/	
2.2-4.0	31.37	X1027			16	18				D0931027137		
2.2-7.5	27.82	X1224			16	18	22			D0931224108		
2.2-7.5	23.38	X1523			16	18	22			D0931523087		
2.2-11	21.49	X1721			16	18	22	28		D0931721073		
3.0-11	19.08	X1723			16	18	22	28		D0931723071		
3.0-11	17.06	X1725			16	18	22	28		D0931725069		
3.0-11	15.34	X1727			16	18	22	28		D0931727067		
4.0-15	13.31	X2026				18	22	28		D0932026056		
4.0-15	11.92	X2028				18	22	28		D0932028054		
5.5-18.5	9.89	X2525					22	28	32	D0932525040		
5.5-18.5	9.14	X1725					22	28	32	D0931725069		D
5.5-22	8.22	X1727					22	28	32	D0931727067		
5.5-22	7.13	X2026					22	28	32	D0932026056		
7.5-22	6.39	X2028					22	28	32	D0932028054		
7.5-22	5.30	X2525					22	28	32	D0932525040		

Selection of instruction:

1. The basic gearboxes=E+X+A+C, or F+Y+B+C, or G+Z+C,or H+V+D (with extra IEC input flange)

E+X+A+C,collocate ratio from 81.84 to 246.31 .
F+Y+B+C,collocate ratio from 27.86 to 72.5.
G+Z+C,collocate ratio from 9.89 to 34.37.
H+V+D,collocate ratio from 5.30 to 9.14.

2. E.g: if you need to collocate ratio 11.92,you should choose basic modular C
with First stage-small gear G(2028) and first stage big gear Z(D0932028054)
if you need to collocate ratio 93.29,you should choose basic modular C
with Second stage gear shaft A(R86-13.1(14/87))and Second stage gear(ZR86-14.1(87/14)),
and First stage-small gear E(X1721) with first stage big gear X(D0721721051)

3.Diameter of first stage-small gear depends on motor size.

WMR97 RATIO MATCH TABLE

Motor power range(KW)	Ratio	First stage-small gear	80 type	90 type	100 type	112 type	132 type	160 type	180 type	200 type	First stage-big gear	Second stage gear shaft and gear	Basic Modular
0.55-0.75	289.74	X1017	12								D0931017147		
0.55-1.5	255.71	X1019	12	14							D0931019145		
0.55-1.5	241.25	X1020	12	14							D0931020144		
0.55-2.2	216.28	X1022	12	14	16						D0931022142		
0.75-2.2	186.30	X1025	12	14	16						D0931025139		
0.75-2.2	170.02	X1027	12	14	16						D0931027137		
1.1-3	150.78	X1224		14	16						D0931224108	R96-13.1(18/109) ZR96-14.1(109/18)	
1.1-3	126.75	X1523		14	16						D0931523087		
1.1-4	116.48	X1721		14	16	18					D0931721073		
1.5-4	103.44	X1723		14	16	18					D0931723071		
1.5-4	92.48	X1725		14	16	18					D0931725069		
2.2-5.5	83.15	X1727			16	18	22				D0931727067		
2.2-5.5	72.17	X2026			16	18	22				D0932026056		
2.2-5.5	65.21	X1523			16	18	22				D0931523087		
2.2-7.5	59.92	X1721			16	18	22				D0931721073		
2.2-7.5	53.21	X1723			16	18	22				D0931723071		
2.2-7.5	47.58	X1725			16	18	22				D0931725069	R96-13.2(26/81) ZR96-14.2(81/26)	
3.0-11	42.78	X1727			16	18	22	28			D0931727067		
3.0-11	37.13	X2026			16	18	22	28			D0932026056		
3.0-11	33.25	X2028			16	18	22	28			D0932028054		
5.5-15	27.58	X2525				18	22	28			D0932525040		
4.0-7.5	32.05	X1224				18	22				D1161224139		
4.0-7.5	27.19	X1523				18	22				D1161523113		
4.0-15	25.03	X1721				18	22	28			D1161721095		
4.0-15	22.37	X1723				18	22	28			D1161723093		
4.0-18.5	20.14	X1725				18	22	28	32		D1161725091		
5.5-22	18.24	X1727					22	28	32		D1161727089		
5.5-22	16.17	X2026					22	28	32		D1162026076		
11.0-22	14.62	X2028						28	32		D1162028074	/	
11.0-22	12.39	X2525						28	32		D1162525056		
11.0-30	10.83	X3023						28	32	38	D1163023045		
11.0-30	9.29	X2026						28	32	38	D1162026076		
11.0-30	8.39	X2028						28	32	38	D1162028074		
11.0-30	7.12	X2525						28	32	38	D1162525056		
11.0-30	6.21	X3023						28	32	38	D1163023045		
18.5-30	5.20	X3522							32	38	D1163522036		
18.5-30	4.50	X3524							32	38	D1163524034		

Selection of instruction:

1. The basic gearboxes=E+X+A+C, or F+Y+B+C, or G+Z+C,or H+V+D (with extra IEC input flange)

E+X+A+C,collocate ratio from 72.17 to 289.74.
F+Y+B+C,collocate ratio from 27.58 to 65.21.
G+Z+C,collocate ratio from 10.83 to 32.05.
H+V+D,collocate ratio from 4.5 to 9.29.

2. E.g: if you need to collocate ratio 12.39,you should choose basic modular C
with First stage-small gear G(2525) and first stage big gear Z(D1162525056)
if you need to collocate ratio 92.48,you should choose basic modular C
with Second stage gear shaft A(R96-13.1(18/109))and Second stage gear(ZR96-14.1(109/18)),
and First stage-small gear E(X1725) with first stage big gear X(D0931725069)

3.Diameter of first stage-small gear depends on motor size.

MR107 RATIO MATCH TABLE

Motor power range(KW)	Ratio	First stage-small gear	100 type	112 type	132 type	160 type	180 type	200 type	225 type	First stage-big gear	Second stage gear shaft and gear	Basic Modular
2.2	251.15	X1025								D1161025179	ZR107-14.1 ZR107-13.1	C
2.2	229.95	X1027	16							D1161027177		
2.2-3	203.16	X1224	16							D1161224139		
2.2-4	172.34	X1523	16	18						D1161523113		
2.2-4	158.68	X1721	16	18						D1161721095		
2.2-4	141.83	X1723	16	18						D1161723093		
2.2-4	127.68	X1725	16	18						D1161725091		
2.2-5.5	115.63	X1727	16	18	22					D1161727089		
2.2-5.5	102.53	X2026	16	18	22					D1162026076		
2.2-7.5	92.70	X2028	16	18	22					D1162028074		
3-7.5	78.57	X2525		18	22					D1162525056		
3-7.5	72.88	X1723		18	22					D1161723093	ZR107-14.2 ZR107-13.2	
4-7.5	65.60	X1725		18	22					D1161725091		
4-11	59.41	X1727		18	22	28				D1161727089		
4-11	52.68	X2026		18	22	28				D1162026076		
5.5-11	47.63	X2028			22	28				D1162028074		
5.5-15	40.37	X2525			22	28				D1162525056		
7.5-18.5	35.26	X3023			22	28				D1163023045		
7.5-22	29.49	X3522			22	28				D1163522036		
7.5-15	30.77	X1721			22	28				D1301721109	/	
7.5-15	27.58	X1723			22	28				D1301723107		
7.5-22	24.90	X1725			22	28	32			D1301725105		
7.5-22	22.62	X1727			22	28	32			D1301727103		
11-30	20.07	X2026				28	32	38		D1302026088		
11-37	18.21	X2028				28	32	38	38	D1302028086		
15-45	15.65	X2525				28	32	38	38	D1302525066		
15-45	13.66	X3023				28	32	38	38	D1303023053		
18.5-45	11.59	X3522					32	38	38	D1303522043		
18.5-45	10.13	X3524					32	38	38	D1303524041		
22-45	8.56	X3527					32	38	38	D1303527039		
18.5-45	7.86	X3023					32	38	38	D1303023053		D
18.5-45	6.66	X3522					32	38	38	D1303522043		
22-45	5.82	X3524					32	38	38	D1303524041		
30-45	4.92	X3527						38	38	D1303527039		

Selection of instruction:

1. The basic gearboxes=E+X+A+C, or F+Y+B+C, or G+Z+C,or H+V+D (with extra IEc input flange)

E+X+A+C,collocate ratio from78.57 to 251.15
F+Y+B+C.collocate ratio from 29.49 to 72.88
G+Z+C,collocate ratio from g.8.56 to 30.77
H+V+D,collocate ratio from 4.92 to 7.86

2. E.g: if you need to collocate ratio 11.59,you should choose basic modular C
with First stage-small gear G(X3522) and first stage big gear Z(D1303522043)
if you need to collocate ratio 92.7,you should choose basic modular C
with Second stage A(ZR107-14.1+ ZR107-13.1))and First stage-small gear E(X2028)
with first stage big gear X(D1162028074)

3.Diameter of first stage-small gear depends on motor size.

Output speed (r/min)	Output torque (N.M)	Ratio (i)	Service Factor (fs)	Type	Motor Pole
0.12KW					
0.18	4500	7583	0.95	MR107 R77 MRF107 R77	4P
0.20	3850	6743	1.10		
0.23	3660	5914	1.20		
0.27	2950	5168	1.45		
0.31	2600	4435	1.65		
0.35	2310	3896	1.85		
0.45	1880	3039	2.3		
0.35	2670	3918	1.6		
0.41	2240	3343	1.9		
0.45	2030	3034	2.1		
0.52	1750	2653	2.5		
0.61	1500	2280	2.9		
0.67	1300	2067	3.3		
0.30	2950	4559	1.00	WMR97 R57 WMRF97 R57	4P
0.34	2500	4004	1.20		
0.40	2200	3481	1.35		
0.29	3240	4678	0.90		
0.32	2970	4309	1.00		
0.37	2510	3702	1.20		
0.46	2010	3019	1.5		
0.52	1750	3668	1.70		
0.61	1440	2245	2.1		
0.68	1280	2016	2.3		
0.80	1160	1733	2.6		
0.45	2020	3065	1.5		
0.51	1790	2722	1.65		
0.60	1510	2311	2.0		
0.66	1360	2078	2.2		
0.76	1170	1823	2.6		
0.87	1020	1583	3.0		
0.99	860	1396	3.5		
1.1	740	1228	4.1		
0.48	1740	2873	0.90	WMR87 R57 WMRF87 R57	4P
0.70	1260	1961	1.25		
0.50	1850	2770	0.85		
0.53	1730	2595	0.90		
0.65	1390	2129	1.10		
0.72	1240	1930	1.25		
0.80	1100	1733	1.40		
0.79	1090	1737	1.40		
0.91	960	1524	1.60		
1.1	775	1303	2.0		
1.2	680	1143	2.3		
1.6	555	885	2.8		
1.8	485	776	3.2		
2.0	430	685	3.6		
2.3	345	599	4.5		
0.97	950	1430	0.85	WMR77 R37 WMRF77 R37	4P
1.1	900	1303	0.90		
1.2	770	1124	1.05		
1.3	715	1047	1.15		
1.5	615	915	1.35		
0.99	940	1394	0.85		
1.1	785	1218	1.05		
1.3	710	1084	1.15		
1.5	635	940	1.30		
1.7	505	821	1.60		
1.9	460	731	1.80		
2.1	440	646	1.85		
2.7	365	520	2.3		
3.1	310	451	2.6		
3.3	290	422	2.8		
3.8	245	365	3.3		

Output speed (r/min)	Output torque (N.M)	Ratio (i)	Service Factor (fs)	Type	Motor Pole
0.12KW					
1.4	655	956	0.90	WMR67 R37 WMRF67 R37	4P
1.5	605	891	1.00		
1.9	490	730	1.25		
2.1	425	644	1.40		
2.4	375	571	1.60		
2.8	315	486	1.90		
1.6	565	836	1.05		
1.8	475	750	1.25		
2.1	420	646	1.40		
2.4	380	574	1.55		
2.8	330	495	1.80		
3.2	275	438	2.2		
1.8	525	782	0.85	WMR57 R37 WMRF57 R37	4P
2.0	440	678	1.05		
2.3	395	604	1.15		
2.6	360	537	1.25		
2.9	315	471	1.45		
3.9	235	357	1.95		
4.3	205	319	2.2		
3.8	245	359	1.80		
4.3	225	324	2.0		
4.8	196	290	2.3		
5.3	177	262	2.5		
5.6	164	246	2.8		
6.3	144	220	3.1		
2.4	375	572	0.80	WMR47 R37 WMRF47 R37	4P
2.7	330	510	0.90		
3.2	275	436	1.10		
3.4	255	408	1.15		
4.0	210	344	1.40		
2.8	355	502	0.85		
3.2	300	429	1.00		
3.7	255	372	1.15		
4.0	240	348	1.25		
4.6	205	301	1.50		
5.4	169	255	1.75		
6.1	150	228	2.0		
7.1	125	195	2.4		
4.6	250	195.24	3.3	WMR77 WMRF77	6P
5.4	210	166.59	3.9		
6.2	186	145.67	4.4		
4.5	255	199.81	2.4	WMR67 WMRF67	6P
4.9	235	184.07	2.6		
5.7	200	158.14	3.0		
6.5	175	137.67	3.4		
7.0	164	128.97	3.7		
7.9	145	113.94	4.1		
6.9	166	199.81	3.6	WMR67 WMRF67	4P
7.5	153	184.07	3.9		
4.8	240	186.89	1.9	WMR57 WMRF57	6P
5.2	220	172.17	2.0		
6.1	188	147.92	2.4		
7.0	164	128.77	2.7		
7.5	154	120.63	2.9		
8.4	136	106.58	3.3		
9.1	126	98.99	3.6		
7.4	155	186.89	2.9	WMR57 WMRF57	4P
8.0	143	172.17	3.2		
9.3	123	147.92	3.7		
11	107	128.77	4.2		

Output speed (r/min)	Output torque (N.M)	Ratio (i)	Service Factor (fs)	Type	Motor Pole
0.12KW					
5.1	225	176.88	1.35	WMR47 WMRF47	6P
5.5	210	162.94	1.45		
6.4	178	139.99	1.70		
7.4	155	121.87	1.95		
7.8	147	176.88	2.0	WMR47 WMRF47	4P
8.5	135	162.94	2.2		
9.9	116	139.99	2.6		
11	101	121.87	3.0		
12	95	114.17	3.2		
14	84	100.86	3.6		
15	78	93.68	3.9		
6.7	172	134.82	1.15	WMR37 WMRF37	6P
7.3	157	123.66	1.25		
8.6	134	105.28	1.50		
9.9	116	90.77	1.75		
11	108	84.61	1.85		
12	94	73.96	2.1		
10	112	134.82	1.80	WMR37 WMRF37	4P
11	103	123.66	1.95		
13	87	105.28	2.3		
15	75	90.77	2.7		
16	70	84.61	2.8		
19	61	73.96	3.3		
0.18KW					
0.30	4510	4435	0.95	MR107 R77 MRF107 R77	4P
0.34	3990	3896	1.10		
0.43	3190	3039	1.35		
0.34	4380	3918	1.00		
0.39	3700	3343	1.15		
0.44	3360	3034	1.30		
0.50	2910	2653	1.50		
0.58	2500	2280	1.70		
0.64	2200	2067	1.95		
0.66	2050	1987	2.1		
0.72	1840	1827	2.3		
0.83	1580	1599	2.7		
0.94	1410	1400	3.1		
1.1	1210	1226	3.6		
0.76	1850	1733	0.85	WMR87 R57 WMRF87 R57	4P
0.89	1650	1489	0.95		
0.95	1540	1395	1.00		
1.1	1350	1232	1.15		
1.1	1250	1145	1.25		
1.3	1120	1037	1.40		
1.4	1000	931	1.55		
1.6	850	802	1.85		
0.76	1850	1737	0.85		
0.87	1620	1524	0.95		
1.0	1350	1303	1.15		
1.2	1180	1143	1.30		
1.5	940	885	1.65		
1.7	830	776	1.90		
1.5	950	858	0.85	WMR77 R37 WMRF77 R37	4P
1.7	830	575	1.00		
2.0	735	671	1.10		
2.3	620	571	1.35		
1.6	870	821	0.95		
1.8	780	731	1.05		
2.0	720	646	1.15		
2.4	625	560	1.30		

Output speed (r/min)	Output torque (N.M)	Ratio (i)	Service Factor (fs)	Type	Motor Pole
0.18KW					
2.7	530	488	1.55	WMR77 R37 WMRF77 R37	4P
3.0	470	436	1.75		
3.5	405	373	2.0		
4.0	355	327	2.3		
4.6	320	289	2.6		
2.3	625	571	0.95	WMR67 R37 WMRF67 R37	4P
2.7	525	486	1.15		
2.3	635	574	0.95		
2.7	545	495	1.10		
3.0	465	438	1.30		
3.4	415	388	1.45		
3.8	380	344	1.60		
4.5	310	294	1.95		
5.1	280	261	2.1		
2.9	490	454	0.90	WMR57 R37 WMRF57 R37	4P
3.2	445	410	1.00		
2.8	520	471	0.85		
3.7	390	357	1.15		
4.1	345	319	1.30		
4.8	290	273	1.55		
5.5	255	241	1.75		
6.1	225	215	2.0		
3.7	405	359	1.10		
4.1	365	324	1.25		
4.6	325	290	1.40		
5.0	295	262	1.55		
5.3	275	246	1.65		
6.0	240	220	1.85		
7.0	205	188	2.2		
8.3	172	159	2.6		
4.4	335	301	0.90	WMR47 R37 WMRF47 R37	4P
5.2	285	255	1.05		
5.8	250	228	1.20		
6.8	210	195	1.40		
4.5	385	195.24	2.1	WMR77 WMRF77	6P
5.2	330	166.59	2.5		
6.0	290	145.67	2.8		
6.3	275	138.39	3.0		
7.2	240	121.42	3.4		
6.8	255	195.24	3.2	WMR77 WMRF77	4P
7.9	215	166.59	3.8		
9.1	190	145.67	4.3		
9.5	180	138.39	4.6		
4.3	395	199.81	1.50	WMR67 WMRF67	6P
4.7	365	184.07	1.65		
5.5	310	158.14	1.90		
6.3	270	137.67	2.2		
6.8	255	128.97	2.3		
7.6	225	113.94	2.7		
8.2	210	105.83	2.9		
9.1	190	95.91	3.2		
10	170	86.11	3.5		
12	147	74.17	4.1		
12	138	69.75	4.3		

Output speed (r/min)	Output torque (N.M)	Ratio (i)	Service Factor (fs)	Type	Motor Pole
0.18KW					
6.6	260	199.81	2.3	WMR67 WMRF67	4P
7.2	240	184.07	2.5		
8.4	205	158.14	2.9		
9.6	179	137.67	3.3		
10	168	128.97	3.6		
12	148	113.94	4.0		
12	138	105.83	4.3		
4.7	370	186.89	1.20	WMR57 WMRF57	6P
5.1	340	172.17	1.30		
5.9	290	147.92	1.55		
6.8	255	128.77	1.75		
7.2	240	120.63	1.90		
7.1	245	186.89	1.85	WMR57 WMRF57	4P
7.7	225	172.17	2.0		
8.9	193	147.92	2.3		
10	168	128.77	2.7		
11	157	120.63	2.9		
12	139	106.58	3.2		
13	129	98.99	3.5		
15	117	89.71	3.8		
7.5	230	176.88	1.30	WMR47 WMRF47	4P
8.1	210	162.94	1.40		
9.4	182	139.99	1.65		
11	159	121.87	1.90		
12	149	114.17	2.0		
13	131	100.86	2.3		
14	122	93.68	2.5		
16	111	84.90	2.7		
17	99	76.23	3.0		
7.0	245	123.66	0.80	WMR37 WMRF37	6P
8.3	210	105.28	0.95		
9.6	179	90.77	1.10		
10	167	84.61	1.20		
9.8	176	134.82	1.15	WMR37 WMRF37	4P
11	161	123.66	1.25		
13	137	105.28	1.45		
15	118	90.77	1.70		
16	110	84.61	1.80		
18	96	73.96	2.1		
19	90	69.33	2.2		
22	80	61.18	2.5		
24	73	55.76	2.8		
27	63	48.08	3.2		
0.25KW					
0.43	4670	13039	0.90	MR107 R77 MRF107 R77	4P
0.43	4860	3034	0.90		
0.65	3030	1987	1.40		
0.71	2740	1827	1.55		
0.81	2370	1599	1.8		
0.93	2100	1400	2.0		
1.1	1810	1226	2.4		
1.4	1410	939	3.0		
1.6	1220	822	3.5		

Output speed (r/min)	Output torque (N.M)	Ratio (i)	Service Factor (fs)	Type	Motor Pole
0.25KW					
0.64	3160	2016	0.95	WMR97 R57 WMRF97 R57	4P
0.75	2780	1733	1.10		
0.80	2590	1623	1.15		
0.71	2870	1823	1.05		
0.82	2490	1583	1.20		
0.93	2160	1396	1.40		
1.1	1880	1228	1.60		
1.2	1700	1069	1.75		
1.4	1480	938	2.0		
1.6	1260	824	2.4		
1.8	1130	737	2.7		
2.1	970	632	3.1		
1.1	1810	1145	0.85	WMR87 R57 WMRF87 R57	4P
1.2	1630	1037	0.95		
1.4	1460	931	1.05		
1.6	1250	802	1.25		
1.1	1750	1143	0.90		
1.5	1380	885	1.10		
1.7	1210	776	1.30		
1.9	1070	685	1.45		
2.2	900	599	1.70		
2.5	795	525	1.95		
2.8	695	456	2.2		
4.9	405	268	3.8		
2.3	900	571	0.90	WMR77 R37 WMRF77 R37	4P
2.3	900	560	0.90		
2.7	775	488	1.05		
3.0	690	436	1.20		
3.5	590	373	1.40		
4.0	520	327	1.60		
4.5	460	289	1.80		
5.0	410	260	2.0		
5.8	345	224	2.4		
3.3	605	388	1.00	WMR67 R37 WMRF67 R37	4P
3.8	550	344	1.10		
4.4	455	294	1.30		
5.0	410	261	1.45		
5.6	370	234	1.60		
6.5	315	200	1.90		
7.4	270	176	2.2		
8.2	245	158	2.5		
3.4	630	384	0.95		
3.6	585	359	1.05		
4.2	505	310	1.20		
4.9	425	264	1.40		
5.5	375	235	1.60		
6.5	320	201	1.90		
7.2	290	181	2.1		
4.1	505	319	0.90	WMR47 R37 WMRF47 R37	4P
4.8	425	273	1.05		
5.4	375	241	1.20		
6.1	335	215	1.35		
6.9	295	187	1.55		
7.9	255	164	1.75		
9.2	220	142	2.0		
4.0	530	324	0.85		
4.5	470	290	0.95		
5.0	425	262	1.05		
5.3	395	246	1.15		
5.9	355	220	1.30		

Output speed (r/min)	Output torque (N.M)	Ratio (i)	Service Factor (fs)	Type	Motor Pole
0.25KW					
5.7	365	228	0.80	WMR57 R37 WMRF57 R37	4P
6.7	310	195	0.95		
7.1	290	182	1.05		
8.5	240	154	1.25		
2.3	1020	289.74	3.0	WMR97 WMRF97	8P
2.7	900	255.71	3.3		
2.8	850	241.25	3.5		
3.1	760	216.28	4.0		
2.8	870	246.31	1.80	WMR87 WMRF87	8P
3.1	760	216.34	2.0		
3.3	720	205.52	2.2		
3.7	640	181.60	2.4		
4.1	585	166.49	1.40	WMR77 WMRF77	8P
4.7	510	145.67	1.60		
4.9	485	138.39	1.70		
5.6	425	121.42	1.90		
4.5	530	195.24	1.55	WMR77 WMRF77	6P
5.3	450	166.59	1.80		
6.0	395	145.67	2.1		
6.7	360	195.24	2.3	WMR77 WMRF77	4P
7.8	305	166.59	2.7		
8.9	270	15.67	3.1		
9.4	255	138.39	3.2		
11	225	121.42	3.7		
4.3	555	158.14	1.10	WMR67 WMRF67	8P
4.9	485	137.67	1.25		
5.3	455	128.97	1.35		
6.0	400	113.94	1.50		
4.4	540	199.81	1.10	WMR67 WMRF67	6P
4.8	500	184.07	1.20		
5.6	430	158.14	1.40		
6.4	375	137.67	1.60		
6.8	350	128.97	1.70		
7.7	310	113.94	1.95		
8.3	285	105.83	2.1		
6.5	365	199.81	1.65	WMR67 WMRF67	4P
7.1	340	184.07	1.80		
8.2	290	158.14	2.1		
9.4	255	137.67	2.4		
10	235	128.97	2.5		
11	210	113.94	2.9		
12	194	105.83	3.1		
14	176	95.91	3.4		
15	158	86.11	3.8		
4.7	505	186.89	1.90	WMR57 WMRF57	6P
5.1	465	172.17	1.95		
5.9	400	147.92	1.10		
6.8	350	128.77	1.30		
7.3	325	120.63	1.35		
8.3	290	106.58	1.55		
8.9	270	98.99	1.70		
7.0	345	186.89	1.30	WMR57 WMRF57	4P
7.6	315	172.17	1.40		
8.8	270	147.92	1.65		
10	235	128.77	1.90		
11	220	120.63	2.0		
12	196	106.58	2.3		
13	182	98.99	2.5		
14	165	89.71	2.7		
16	148	80.55	3.0		
19	127	69.23	3.5		

Output speed (r/min)	Output torque (N.M)	Ratio (i)	Service Factor (fs)	Type	Motor Pole
0.25KW					
7.3	325	176.88	0.90	WMR47 WMRF47	4P
8.0	300	162.94	1.00		
9.3	255	139.99	1.15		
11	225	121.87	1.35		
11	210	114.17	1.45		
13	185	100.86	1.60		
14	172	93.68	1.75		
15	156	84.90	1.90		
17	140	76.23	2.1		
19	126	68.54	2.4		
20	118	64.21	2.5		
23	104	56.73	2.9		
25	97	52.69	3.1		
27	88	47.75	3.4		
9.6	250	134.82	0.80	WMR37 WMRF37	4P
11	225	123.66	0.90		
12	193	105.28	1.05		
14	167	90.77	1.20		
15	155	84.61	1.30		
18	136	73.96	1.45		
19	127	69.33	1.55		
21	112	61.18	1.80		
23	102	55.76	1.95		
27	88	48.08	2.3		
29	82	44.81	2.4		
33	72	39.17	2.8		
35	67	36.72	3.0		
40	60	32.40	3.4		
0.37KW					
0.67	4610	2067	0.95	MR107 R77 MRF107 R77	4P
0.82	3760	1693	1.15		
0.89	3410	1550	1.25		
0.98	3090	1407	1.40		
1.1	2660	1209	1.60		
1.3	2320	1055	1.85		
0.69	4370	1987	1.00		
0.76	3970	1827	1.10		
0.86	3440	1599	1.25		
0.99	3040	1400	1.40		
1.1	2640	1226	1.65		
1.5	2040	939	2.1		
1.7	1770	822	2.4		
0.96	3240	1434	0.95	WMR77 R37 WMRF77 R37	4P
1.1	2710	1207	1.10		
1.3	2430	1084	1.25		
0.99	3100	1396	0.95		
1.1	2710	1228	1.10		
1.3	2410	1069	1.25		
1.5	2110	938	1.40		
1.7	1820	824	1.65		
1.9	1630	737	1.85		
2.2	1390	632	2.2		
3.2	960	431	3.1		
3.6	840	379	3.6		
4.1	745	336	4.0		
1.7	1780	802	0.85	WMR97 R57 WMRF97 R57	4P
1.8	1670	754	0.95		
2.1	1430	649	1.1		
1.8	1730	776	0.90		
2.0	1530	685	1.00		
2.3	1310	599	1.20		
2.6	1150	525	1.35		
3.0	1000	456	1.55		
5.2	585	268	2.7		

Output speed (r/min)	Output torque (N.M)	Ratio (i)	Service Factor (fs)	Type	Motor Pole
0.37KW					
3.2	980	436	0.85	WMR87 R57 WMRF87 R57	4P
3.7	840	373	0.95		
4.2	740	327	1.10		
4.8	655	289	1.25		
5.3	585	260	1.40		
6.2	500	224	1.65		
7.0	435	197	1.90		
8.1	380	169	2.2		
9.3	335	149	2.5		
5.8	515	236	3.0		
2.6	1230	538	1.25		
2.9	1080	472	1.45		
3.5	910	400	1.70		
3.8	810	361	1.90		
4.7	650	294	0.90	WMR67 R37 WMRF67 R37	4P
5.3	585	261	1.00		
5.9	525	234	1.15		
6.9	450	200	1.35		
2.7	1330	255.71	2.3	WMR97 WMRF97	8P
2.8	1250	241.25	2.4		
3.1	1120	216.28	2.7		
3.7	970	186.30	3.1		
3.1	1140	289.74	2.6	WMR97 WMRF97	6P
3.5	1000	255.71	3.0		
3.7	950	241.25	3.2		
4.2	850	216.28	3.5		
3.1	1130	216.34	1.40	WMR87 WMRF87	8P
3.3	1070	205.52	1.45		
3.7	940	181.60	1.65		
3.7	970	246.31	1.60	WMR87 WMRF87	6P
4.2	850	216.34	1.80		
4.4	810	205.52	1.90		
4.9	715	181.60	2.2		
5.8	610	155.20	2.5		
6.3	560	142.28	2.8		
4.7	755	145.67	1.10	WMR77 WMRF77	8P
4.9	720	138.39	1.15		
5.6	630	121.42	1.30		
5.4	655	166.59	1.25	WMR77 WMRF77	6P
6.2	570	145.67	1.45		
6.5	545	138.39	1.50		
7.1	500	195.24	1.65	WMR77 WMRF77	4P
8.3	425	166.59	1.90		
9.5	375	145.67	2.2		
10	355	138.39	2.3		
11	310	121.42	2.6		
13	265	102.99	3.1		
15	240	92.97	3.5		
5.7	620	158.14	0.95	WMR67 WMRF67	6P
6.5	540	137.67	1.10		
7.0	505	128.97	1.20		
7.9	445	113.94	1.35		

Output speed (r/min)	Output torque (N.M)	Ratio (i)	Service Factor (fs)	Type	Motor Pole
0.37KW					
6.9	510	199.81	1.15	WMR67 WMRF67	4P
7.5	470	184.07	1.25		
8.7	405	158.14	1.50		
10	355	137.67	1.70		
11	330	128.97	1.80		
12	290	113.94	2.1		
13	270	105.83	2.2		
14	245	95.91	2.4		
16	220	86.11	2.7		
19	190	74.17	3.2		
20	179	69.75	3.4		
23	157	61.26	3.8		
24	146	56.89	4.1		
7.0	505	128.77	0.90	WMR57 WMRF57	6P
7.5	475	120.63	0.95		
8.4	420	106.58	1.10		
9.1	390	98.99	1.15		
7.4	480	186.89	0.95	WMR57 WMRF57	4P
8.0	440	172.17	1.00		
9.3	380	147.92	1.20		
11	330	128.77	1.35		
11	310	120.63	1.45		
13	275	106.58	1.65		
14	255	98.99	1.80		
15	230	89.71	1.95		
17	205	80.55	2.2		
20	177	69.23	2.5		
21	166	64.85	2.7		
24	147	57.29	3.1		
26	136	53.22	3.3		
29	124	48.23	3.6		
9.9	360	139.99	0.85	WMR47 WMRF47	4P
11	310	121.87	0.95		
12	290	114.17	1.05		
14	260	100.86	1.15		
15	240	93.68	1.25		
16	215	84.90	1.40		
18	195	76.23	1.55		
20	176	68.54	1.70		
21	164	64.21	1.80		
24	145	56.73	2.1		
26	135	52.69	2.2		
29	122	47.75	2.5		
32	110	42.87	2.7		
37	95	36.93	3.2		
40	89	34.73	3.4		
41	87	33.79	2.8		
44	80	31.12	2.8		
52	69	26.74	4.4		
59	60	13.28	5.0		
63	56	21.81	5.4		
15	230	90.77	0.85	WMR37 WMRF37	4P
16	215	84.61	0.90		
19	189	73.96	1.05		
20	178	69.33	1.15		
23	157	61.18	1.30		
25	143	55.76	1.40		
29	123	48.08	1.60		

Output speed (r/min)	Output torque (N.M)	Ratio (i)	Service Factor (fs)	Type	Motor Pole
0.37KW					
31	115	44.81	1.75	WMR37 WMRF37	4P
35	100	39.17	2.0		
38	94	36.72	2.1		
43	83	32.40	2.4		
48	74	28.73	2.7		
57	63	24.42	3.2		
49	73	28.32	2.8		
53	67	26.03	2.8		
62	57	22.27	3.5		
71	49	19.31	4.1		
76	46	18.05	4.3		
88	40	15.60	5.0		
104	34	13.25	5.6		
117	30	11.83	6.0		
0.55KW					
0.97	4790	1407	0.90	MR107 R77 MRF107 R77	4P
1.1	4120	1209	1.05		
1.3	3590	1055	1.20		
1.5	3140	979	1.35		
1.7	2790	815	1.55		
1.9	2450	717	1.75		
2.2	2140	626	2.0		
0.97	4730	1400	0.90		
1.1	4120	1226	1.05		
1.2	3690	1104	1.15		
1.5	3170	939	1.35		
1.7	2760	822	1.55		
1.5	3240	938	0.95	WMR97 R57 WMRF97 R57	4P
1.6	2810	824	1.05		
1.8	2520	737	1.20		
2.2	2160	632	1.40		
2.4	1880	560	1.60		
2.8	1640	484	1.85		
3.2	1480	431	2.0		
3.6	1290	379	2.3		
4.0	1150	336	2.6		
4.6	1010	296	3.0		
5.5	840	249	3.6		
2.6	1780	525	0.85	WMR87 R57 WMRF87 R57	4P
3.0	1550	456	1.00		
3.4	1340	398	1.15		
3.9	1190	352	1.30		
4.4	1030	305	1.50		
2.9	1650	472	0.95		
3.4	1400	400	1.10		
3.8	1260	361	1.25		
4.9	970	276	0.85	WMR77 R37 WMRF77 R37	4P
5.8	830	236	1.00		
6.2	775	221	1.05		
7.3	650	186	1.25		
2.7	1980	255.71	1.50	WMR97 WMRF97	8P
2.8	1860	241.25	1.60		
3.1	1670	216.28	1.80		
3.1	1690	289.74	1.75	WMR97 WMRF97	6P
3.5	1490	255.71	2.0		
3.7	1410	241.25	2.1		
4.2	1260	216.28	2.4		

Output speed (r/min)	Output torque (N.M)	Ratio (i)	Service Factor (fs)	Type	Motor Pole
0.55KW					
4.7	1120	289.74	2.7	WMR97 WMRF97	4P
5.3	990	255.71	3.0		
5.6	930	241.25	3.2		
6.3	840	216.28	3.6		
3.7	1440	246.31	1.10	WMR87 WMRF87	6P
4.2	1260	216.34	1.25		
4.4	1200	205.52	1.30		
4.9	1060	181.60	1.45		
5.8	910	155.20	1.70		
5.5	950	246.31	1.65	WMR87 WMRF87	4P
6.3	840	216.34	1.85		
6.6	795	205.52	1.95		
7.5	700	181.60	2.2		
8.8	600	155.20	2.6		
9.6	550	142.28	2.8		
11	485	124.85	3.2		
11	455	118.32	3.4		
13	400	103.56	3.9		
8.2	645	166.59	1.25	WMR77 WMRF77	4P
9.3	565	145.67	1.45		
9.8	535	138.39	1.55		
11	470	121.42	1.75		
13	400	102.99	2.1		
15	360	92.97	2.3		
17	315	81.80	2.6		
18	300	77.24	2.8		
21	255	65.77	3.2		
8.6	610	158.14	1.00	WMR67 WMRF67	4P
9.9	530	137.67	1.15		
11	500	128.97	1.20		
12	440	113.94	1.35		
13	410	105.83	1.45		
14	370	95.91	1.60		
16	335	86.11	1.80		
18	285	74.17	2.1		
20	270	69.75	2.2	WMR67 WMRF67	4P
22	235	61.26	2.5		
24	220	56.89	2.7		
11	465	120.63	0.95	WMR57 WMRF57	4P
13	410	106.58	1.10		
14	380	98.99	1.20		
15	345	89.71	1.30		
17	310	80.55	1.45		
20	265	69.23	1.70		
21	250	64.85	1.80		
24	220	57.29	2.0		
26	205	53.22	2.2		
28	186	48.23	2.4		
31	167	43.30	2.7		
36	144	37.30	3.1		
39	136	35.07	3.3		
52	102	26.31	4.4		
54	97	24.99	4.7		
62	85	21.93	5.3		
73	72	18.60	6.3		

Output speed (r/min)	Output torque (N.M)	Ratio (i)	Service Factor (fs)	Type	Motor Pole
0.55KW					
15	360	93.68	0.85	WMR47 WMRF47	4P
16	330	84.90	0.90		
18	295	76.23	1.00		
20	265	68.54	1.15		
21	250	64.21	1.20		
24	220	56.73	1.35		
26	205	52.69	1.45		
28	184	47.75	1.65		
32	166	42.87	1.80		
37	143	36.93	2.1		
39	134	34.73	2.2		
46	115	29.88	2.6		
51	103	26.74	2.9		
58	90	23.28	3.3		
62	84	21.81	3.6		
22	235	61.18	0.85	WMR37 WMRF37	4P
24	215	55.76	0.95		
28	186	48.08	1.10		
30	173	44.81	1.15		
35	151	39.17	1.30		
37	142	36.72	1.40		
42	125	32.40	1.60		
47	111	28.73	1.80		
56	94	24.42	2.1		
61	86	22.27	2.3		
70	75	19.31	2.7		
75	70	18.05	2.9		
87	60	15.60	3.3		
103	51	13.25	3.7		
115	46	11.83	4.0		
0.75KW					
1.3	4890	1055	0.9	MR107 R77 MRF107 R77	4P
1.5	4270	919	1.00		
1.7	3800	815	1.15		
1.2	5050	1104	0.85		
1.5	4330	939	1.00		
1.7	3770	822	1.15		
3.7	1690	369	2.5		
4.3	1470	323	2.9		
2.8	2610	251.15	1.65	MR107 MRF107	8P
3.0	2390	229.95	1.80		
3.4	2110	203.16	2.0		
2.2	2940	632	1.00	WMR97 R57 WMRF97 R57	4P
2.5	2570	560	1.15		
2.8	2230	484	1.35		
3.2	2010	431	1.50		
3.6	1760	379	1.70		
4.1	1570	336	1.90		
4.7	1370	296	2.2		
5.5	1150	249	2.6		
3.5	1830	398	0.85	WMR87 R57 WMRF87 R57	4P
3.9	1630	352	0.95		
4.5	1400	305	1.10		
5.2	1240	268	1.25		
5.8	1090	236	1.40		
3.8	1710	361	0.90		
4.6	1410	300	1.10		
5.4	1200	256	1.30		

Output speed (r/min)	Output torque (N.M)	Ratio (i)	Service Factor (fs)	Type	Motor Pole
0.75KW					
3.2	2240	216.28	1.35	WMR97 WMRF97	8P
3.7	1930	186.30	1.55		
4.1	1760	170.02	1.70		
3.5	2030	255.71	1.45	WMR97 WMRF97	6P
3.7	1920	241.25	1.55		
4.2	1720	216.28	1.75		
4.8	1500	289.74	2.0	WMR97 WMRF97	4P
5.4	1330	255.71	2.3		
5.7	1250	241.25	2.4		
6.4	1120	216.28	2.7		
7.4	970	186.30	3.1		
8.1	880	170.02	3.4		
4.2	1720	216.34	0.90	WMR87 WMRF87	6P
4.4	1640	205.52	0.95		
4.9	1450	181.60	1.05		
5.8	1240	155.20	1.25		
6.3	1130	142.28	1.35		
5.6	1280	246.31	1.20	WMR87 WMRF87	4P
6.4	1120	216.34	1.40		
6.7	1070	205.52	1.45		
7.6	940	181.60	1.65		
8.9	810	155.20	1.90		
9.7	740	142.28	2.1		
11	650	124.85	2.4		
12	615	118.32	2.5		
13	540	103.56	2.9		
15	485	93.29	3.2		
8.3	860	166.59	0.95	WMR77 WMRF77	4P
9.5	755	145.67	1.10		
10	720	138.39	1.15		
11	630	121.42	1.30		
13	535	102.99	1.55		
15	485	92.97	1.70		
17	425	81.80	1.95		
18	400	77.24	2.0		
21	340	65.77	2.4		
24	300	57.68	2.7		
27	270	52.07	3.0		
30	240	45.81	3.5		
32	225	43.26	3.7		
11	670	128.97	0.90	WMR67 WMRF67	4P
12	590	113.94	1.00		
13	550	105.83	1.10		
14	500	95.91	1.20		
16	445	86.11	1.35		
19	385	74.17	1.55		
20	360	69.75	1.65		
23	320	61.26	1.90		
24	295	56.89	2.0		
27	270	51.56	2.2		
30	240	46.29	2.5		
13	555	106.58	0.80	WMR57 WMRF57	4P
14	515	98.99	0.90		
15	465	89.71	0.95		
17	420	80.55	1.10		
20	360	69.23	1.25		
21	335	64.85	1.35		

Output speed (r/min)	Output torque (N.M)	Ratio (i)	Service Factor (fs)	Type	Motor Pole
0.75KW					
24	295	57.29	1.50	WMR57 WMRF57	4P
26	275	53.22	1.65		
29	250	48.23	1.80		
32	225	43.30	2.0		
37	194	37.30	2.3		
39	182	35.07	2.5		
46	157	30.18	2.9		
51	140	26.97	3.2		
52	137	26.31	3.3		
55	130	24.99	3.5		
63	114	21.93	4.0		
74	97	18.60	4.7		
20	355	68.54	0.85	WMR47 WMRF47	4P
21	335	64.21	0.90		
24	295	56.73	1.00		
26	275	52.69	1.10		
29	250	47.75	1.20		
32	225	42.87	1.35		
37	192	36.93	1.55		
40	180	34.73	1.65		
46	155	29.88	1.95		
52	139	26.70	2.2		
58	122	23.59	2.5		
52	139	26.74	2.2		
59	121	23.28	2.5		
63	113	21.81	2.7		
72	100	19.27	3.0		
77	93	17.89	3.1		
85	84	16.22	3.3		
29	250	48.08	0.80	WMR37 WMRF37	4P
31	235	44.81	0.85		
35	205	39.17	1.00		
38	191	36.72	1.05		
43	168	32.40	1.20		
48	149	28.73	1.35		
57	127	24.42	1.60		
62	116	22.27	1.75		
71	100	19.31	2.0		
76	94	18.05	2.1		
88	81	15.60	2.5		
104	69	13.25	2.8		
117	61	11.83	3.0		
137	53	10.11	3.2		
146	49	9.47	3.4		
1.1KW					
2.0	4870	717	0.90	MR107 R77 MRF107 R77	4P
2.3	4100	614	1.05		
2.6	3630	544	1.20		
2.8	3280	492	1.30		
3.3	2780	417	1.55		
3.8	2480	369	1.75		
4.3	2170	323	2.0		
4.9	1910	285	2.2		
5.5	1690	253	2.5		
3.2	2930	431	1.00	WMR97 R57 WMRF97 R57	4P
3.7	2580	379	1.15		
4.2	2290	336	1.30		
4.7	2010	296	1.50		
5.6	1680	249	1.80		
6.0	1570	234	1.90		
6.7	1400	209	2.1		

Output speed (r/min)	Output torque (N.M)	Ratio (i)	Service Factor (fs)	Type	Motor Pole
1.1KW					
5.2	1810	268	0.85	WMR87 R57 WMRF87 R57	4P
5.9	1600	236	0.95		
6.7	1400	209	1.10		
5.5	1760	256	0.90		
6.0	1590	232	0.95		
7.2	1350	195	1.15		
2.7	3880	251.15	1.10	MR107 MRF107	8P
3.0	3550	229.95	1.20		
3.3	3140	203.16	1.35		
4.0	2660	172.34	1.60		
3.6	2920	255.71	1.05	WMR97 WMRF97	6P
3.8	2750	241.25	1.10		
4.2	2470	216.28	1.20		
4.9	2130	186.30	1.40		
5.5	1920	255.71	1.55	WMR97 WMRF97	4P
5.8	1810	241.25	1.65		
6.5	1620	216.28	1.85		
7.5	1400	186.30	2.2		
8.2	1280	170.02	2.3		
9.3	1130	150.78	2.7		
11	950	126.75	3.2		
12	870	116.48	3.4		
6.5	1620	216.34	0.95	WMR87 WMRF87	4P
6.8	150	205.52	1.00		
7.7	1360	181.60	1.15		
9.0	1170	155.20	1.35		
9.8	1070	142.28	1.45		
11	940	124.85	1.65		
12	890	118.32	1.75		
14	450	103.56	2.0		
15	700	93.29	2.2		
17	615	81.84	2.5		
19	545	72.50	2.8		
22	480	63.62	3.2		
23	455	60.29	3.4		
27	395	52.77	3.9		
12	910	121.42	0.90	WMR77 WMRF77	4P
14	775	102.99	1.05		
15	700	92.97	1.20		
17	615	81.80	1.35		
18	580	77.24	1.40		
21	495	65.77	1.65		
24	435	57.68	1.90		
27	390	52.07	2.1		
31	345	45.81	2.4		
32	325	43.26	2.5		
38	275	36.83	3.0		
42	250	33.47	3.3		
16	645	86.11	0.95	WMR67 WMRF67	4P
19	555	74.17	1.10		
20	525	69.75	1.15		
23	460	61.26	1.30		
25	425	56.89	1.40		
27	385	51.89	1.55		
30	345	46.29	1.75		
35	300	39.88	1.95		
37	280	37.50	2.0		
43	240	32.27	2.2		
49	215	28.83	2.4		
50	210	28.13	2.6		
52	200	26.72	2.7		
60	176	23.44	3.2		
70	149	19.89	4.0		

Output speed (r/min)	Output torque (N.M)	Ratio (i)	Service Factor (fs)	Type	Motor Pole
1.1KW					
20	520	69.23	0.85	WMR57 WMRF57	4P
22	485	64.85	0.90		
24	430	57.29	1.05		
26	400	53.22	1.15		
29	360	48.23	1.25		
32	325	43.30	1.40		
38	280	37.30	1.60		
40	265	35.07	1.70		
46	225	30.18	2.0		
52	200	26.97	2.2		
53	197	26.31	2.3		
56	188	24.99	2.4		
64	165	21.93	2.7		
75	140	18.60	3.2		
83	126	16.79	3.6		
29	360	47.75	0.85	WMR47 WMRF47	4P
33	320	42.87	0.95		
38	275	36.93	1.10		
40	260	34.73	1.15		
47	225	29.88	1.35		
52	200	26.70	1.50	WMR47 WMRF47	4P
59	177	23.59	1.70		
60	175	23.28	1.70		
64	164	21.81	1.85		
73	145	19.27	2.0		
78	134	17.89	2.2		
86	122	16.22	2.3		
96	109	14.56	2.4		
112	94	12.54	2.7		
119	89	11.79	2.8		
138	76	10.15	3.0		
154	68	9.07	3.2		
43	245	32.40	0.80	WMR37 WMRF37	4P
49	215	28.73	0.95		
57	183	24.42	1.10		
73	145	19.31	1.40		
78	135	18.05	1.50		
90	117	15.60	1.70		
106	99	13.25	1.90		
118	89	11.83	2.1		
139	76	10.11	2.2		
148	71	9.47	2.3		
176	60	7.97	2.6		
210	50	6.67	2.9		
247	43	5.67	3.3		
277	38	5.06	3.5		
1.5KW					
2.7	4860	528	0.90	MR107 R77 MRF107 R77	4P
2.6	4970	544	0.85		
2.9	4490	492	0.95		
3.4	3810	417	1.15		
3.8	3390	369	1.25		
4.4	2960	323	1.45		
3.0	4410	469	1.00		
4.2	3120	336	0.95	WMR97 R57 WMRF97 R57	4P
4.8	2740	296	1.10		
5.7	2300	249	1.30		
6.0	2150	234	1.40		
6.8	1920	209	1.55		

Output speed (r/min)	Output torque (N.M)	Ratio (i)	Service Factor (fs)	Type	Motor Pole
1.5KW					
3.0	4710	229.95	0.90	MR107 MRF107	8P
3.5	4160	203.15	1.05		
4.1	3530	172.34	1.20		
4.4	3250	158.68	1.30		
5.5	2600	255.71	1.15	WMR97 WMRF97	4P
5.8	2450	241.25	1.20		
6.5	2200	216.28	1.35		
7.6	1890	186.30	1.60		
8.3	1730	170.02	1.75		
9.4	1530	150.78	1.95		
11	1290	126.75	2.3		
12	1180	116.48	2.5		
14	1050	403.44	2.8		
15	940	92.48	3.2		
7.8	1850	181.60	0.85	WMR87 WMRF87	4P
9.1	1580	155.20	1.00		
9.9	1450	142.28	1.05		
11	1270	124.85	1.20		
12	1200	118.32	1.30		
14	1050	103.56	1.45		
15	950	93.29	1.65		
17	830	81.84	1.85		
19	735	72.50	2.1	WMR87 WMRF87	4P
22	645	63.62	2.4		
23	615	60.29	2.5		
27	535	52.77	2.9		
30	485	47.54	3.2		
34	425	41.70	3.7		
38	375	36.80	4.1		
15	940	92.97	0.85	WMR77 WMRF77	4P
17	830	81.80	1.00		
18	785	77.24	1.05		
21	670	65.77	1.25		
24	585	57.68	1.40		
27	530	52.07	1.55		
31	465	45.81	1.75		
33	440	43.26	1.85		
38	375	36.83	2.2		
42	340	33.47	2.4		
49	295	29.00	2.8		
56	255	25.23	3.0		
60	240	23.37	3.5		
66	220	21.43	3.8		
75	191	18.80	4.1		
23	620	61.26	0.95	WMR67 WMRF67	4P
25	580	56.89	1.05		
27	525	51.56	1.15		
30	470	46.29	1.30		
35	405	39.88	1.45		
38	380	37.50	1.50		
44	330	32.37	1.65		
49	295	28.83	1.80		
50	285	28.13	1.90		
53	270	26.72	2.0		
60	240	23.44	2.3		
71	200	19.89	3.0		
79	182	17.95	3.2		

Output speed (r/min)	Output torque (N.M)	Ratio (i)	Service Factor (fs)	Type	Motor Pole
1.5KW					
27	540	53.22	0.85	WMR57 WMRF57	4P
29	490	48.23	0.90		
33	440	43.30	1.00		
38	380	37.30	1.20		
40	355	35.07	1.25		
47	305	30.18	1.45		
52	275	26.97	1.65		
54	265	26.31	1.70		
56	255	24.99	1.75		
64	225	21.93	2.0		
76	189	18.60	2.4		
84	171	16.79	2.6		
95	150	14.77	2.9		
101	142	13.95	3.0		
119	121	11.88	3.4		
38	375	36.93	0.80	WMR47 WMRF47	4P
41	355	34.73	0.85		
47	305	29.88	1.00		
53	270	26.77	1.10		
60	240	23.59	1.25		
61	235	23.28	1.25		
65	220	21.81	1.35		
73	196	19.27	1.50		
79	182	17.89	1.60		
87	165	16.22	1.65		
97	148	14.56	1.80		
112	127	12.54	1.95		
120	120	11.79	2.0		
139	103	10.15	2.2		
155	92	9.07	2.4		
176	81	8.01	2.5		
182	79	7.76	2.1		
203	71	6.96	2.2		
235	61	6.00	2.6		
250	57	5.64	2.7		
291	49	4.85	3.0		
325	44	4.34	3.3		
368	39	3.83	3.7		
73	196	19.31	1.00	WMR37 WMRF37	4P
78	183	18.05	1.10		
90	159	15.60	1.25		
106	135	13.25	1.40		
119	120	11.83	1.50		
140	103	10.11	1.65		
149	96	9.47	1.75		
177	81	7.97	1.95		
211	68	6.67	2.1		
249	58	5.67	2.5		
279	51	5.06	2.6		
326	44	4.32	2.9		
348	41	4.05	3.0		
414	35	3.41	3.2		
204	70	13.25	2.7	WMR37 WMRF37	2P
228	63	11.83	2.9		
267	54	10.11	3.2		
285	50	9.47	3.3		
339	42	7.97	3.7		

Output speed (r/min)	Output torque (N.M)	Ratio (i)	Service Factor (fs)	Type	Motor Pole
2.2KW					
3.8	5010	369	0.85	MR107 R77 MRF107 R77	4P
4.4	4390	323	1.00		
4.9	3860	285	1.10		
5.6	3420	253	1.25		
6.6	2900	214	1.50		
4.3	4480	325	0.95		
6.0	3170	234	0.95	WMR97 R57 WMRF97 R57	4P
6.8	2840	209	1.05		
4.6	4540	203.16	0.95	MR107 MRF107	6P
5.4	3850	172.34	1.10		
5.9	3550	158.68	1.20		
6.6	3170	141.83	0.35		
5.6	3740	251.15	1.15	MR107 MRF107	4P
6.1	3430	229.95	1.25		
6.9	3030	203.16	1.40		
8.2	2570	172.34	1.65		
8.9	2360	158.68	1.80		
9.9	2110	141.83	2.0		
11	1900	127.68	2.3		
12	1720	115.63	2.5		
14	1530	102.53	2.8		
15	1380	92.70	3.1		
6.5	3220	216.28	0.95	WMR97 WMRF97	4P
7.6	2780	186.30	1.10		
8.3	2530	170.02	1.20		
9.4	2250	150.78	1.35		
11	1890	126.75	1.60		
12	1740	116.48	1.75		
14	1540	103.44	1.95		
15	1380	92.48	2.2		
17	1240	83.15	2.4		
20	1080	72.17	2.8		
22	970	65.21	3.1		
24	890	59.92	3.4		
27	795	53.21	3.8		
30	710	47.58	4.2		
11	1860	124.85	0.85	WMR87 WMRF87	4P
12	1760	118.32	0.90		
14	1540	103.56	1.00		
15	1390	93.29	1.10		
17	1220	81.84	1.25		
19	1080	72.50	1.45		
22	950	63.62	1.65		
23	900	60.29	1.70		
27	785	52.77	1.95		
30	710	47.54	2.2		
34	620	41.70	2.5		
38	550	36.80	2.8		
43	485	32.63	3.2		
41	515	34.37	2.9		
45	470	31.37	3.3		
51	415	27.82	3.7		
60	350	23.38	4.4		
66	320	21.49	4.7		

Output speed (r/min)	Output torque (N.M)	Ratio (i)	Service Factor (fs)	Type	Motor Pole
2.2KW					
21	980	65.77	0.85	WMR77 WMRF77	4P
24	860	57.68	0.95		
27	775	52.07	1.05		
31	685	45.81	1.20		
33	645	43.26	1.25		
38	550	36.83	1.50		
42	500	33.47	1.65		
49	430	29.00	1.90		
56	375	25.23	2.1		
60	350	23.37	2.3		
66	320	21.43	2.6		
75	280	18.80	2.8		
79	265	17.82	2.9		
90	230	15.60	3.2		
100	210	14.05	3.4		
35	595	39.88	1.00	WMR67 WMRF67	4P
38	560	37.50	1.00		
44	480	32.27	1.10		
49	430	28.83	1.20		
60	350	23.44	1.60		
71	295	19.89	2.0		
79	270	17.95	2.2		
89	235	15.79	2.4		
95	220	14.91	2.5		
111	189	12.70	2.8		
122	172	11.54	2.9		
141	149	10.00	3.2		
162	130	8.70	3.4		
181	116	7.79	3.3		
38	555	37.30	0.80	WMR57 WMRF57	4P
40	525	35.07	0.85		
47	450	30.18	1.00		
52	400	26.97	1.10		
64	325	21.93	1.40		
76	275	18.60	1.60		
84	250	16.79	1.80		
95	220	14.77	2.0		
101	210	13.95	2.1		
119	177	11.88	2.3		
131	161	10.79	2.4		
151	139	9.35	2.7		
156	135	9.06	2.8		
177	119	7.97	3.0		
73	285	19.27	1.05	WMR47 WMRF47	4P
87	240	16.22	1.15		
97	215	14.56	1.20		
112	187	12.54	1.35		
120	176	11.79	1.40		
139	151	10.15	1.50		
155	135	9.07	1.65		
176	119	8.01	1.70		
182	116	7.76	1.40		
203	104	6.96	1.55		
235	89	6.00	1.75		
250	84	5.64	1.85		

Output speed (r/min)	Output torque (N.M)	Ratio (i)	Service Factor (fs)	Type	Motor Pole
2.2KW					
291	72	4.85	2.1	WMR47 WMRF47	4P
325	65	4.34	2.3		
368	57	3.83	2.5		
117	179	23.28	1.70	WMR47 WMRF47	2P
125	168	21.81	1.80		
142	148	19.27	2.0		
153	138	17.89	2.1		
168	125	16.22	2.2		
187	112	14.56	2.4		
218	97	12.54	2.6		
231	91	11.79	2.7		
269	78	10.15	2.9		
301	70	9.07	3.2		
341	62	8.01	3.3		
90	230	15.60	0.85	WMR37 WMRF37	4P
106	198	13.25	0.95		
119	176	11.83	1.05		
140	151	10.11	1.15		
149	141	9.47	1.20		
177	119	7.97	1.30		
211	99	6.67	1.45		
249	84	5.67	1.70		
279	75	5.06	1.80		
326	64	4.32	1.95		
348	60	4.05	2.0		
414	51	3.41	2.2		
141	149	19.31	1.35	WMR37 WMRF37	2P
151	139	18.05	1.45		
175	120	15.60	1.65		
206	102	13.25	1.85		
231	91	11.83	2.0		
270	78	10.11	2.2		
288	73	9.47	2.3		
342	61	7.97	2.5		
409	51	6.67	2.8		
482	44	5.67	3.3		
540	39	5.06	3.5		
632	33	4.32	3.8		
675	31	4.05	3.9		
801	26	3.41	4.3		
3.0KW					
5.5	4730	253	0.90	MR107 R77 MRF107 R77	4P
6.5	4010	214	1.05		
7.5	3500	187	1.25		
5.5	4870	256	0.90		
5.9	4840	158.68	0.90	MR107 MRF107	6P
6.6	4320	141.83	1.00		
7.4	3890	127.68	1.10		
6.1	4710	229.95	0.90	MR107 MRF107	4P
6.9	4160	203.16	1.05		
8.1	3530	172.34	1.20		
8.8	3250	158.68	1.30		
9.9	2900	141.83	1.50		
11	2610	127.68	1.65		
12	2370	115.63	1.80		
14	2100	102.53	2.0		
15	1900	92.70	2.3		
18	1610	78.57	2.7		
19	1490	72.88	2.9		

Output speed (r/min)	Output torque (N.M)	Ratio (i)	Service Factor (fs)	Type	Motor Pole
3.0KW					
9.3	3090	150.78	0.95	WMR97 WMRF97	4P
11	2590	126.75	1.15		
12	2380	116.48	1.25		
14	2120	103.44	1.40		
15	1890	92.48	1.60		
17	1700	83.15	1.75		
19	1480	72.17	2.0		
21	1330	65.21	2.2		
23	1230	59.92	2.5		
26	1090	53.21	2.8		
29	970	47.58	3.1		
33	880	42.78	3.4		
38	760	37.13	4.0		
42	680	33.25	4.2		
15	1910	93.29	0.80	WMR87 WMRF87	4P
17	1680	81.84	0.90		
19	1490	72.50	1.05		
22	1300	63.62	1.20		
23	1230	60.29	1.25		
27	1080	52.77	1.45		
29	970	47.54	1.60		
34	850	41.70	1.80		
38	755	36.80	2.1		
43	670	32.63	2.3		
50	570	27.86	2.6		
41	705	34.37	2.1		
45	640	31.37	2.4		
50	570	27.82	2.7		
60	480	23.38	3.2		
65	440	21.49	3.4		
73	390	19.08	3.7		
82	350	17.06	4.0		
91	315	15.34	4.3		
31	940	45.81	0.85	WMR77 WMRF77	4P
32	890	43.26	0.95		
38	755	36.83	1.10		
42	685	33.47	1.20		
48	595	29.00	1.40		
55	515	25.23	1.50		
60	480	23.37	1.70		
65	440	21.43	1.85		
74	385	18.80	2.0		
79	365	17.82	2.1		
90	320	15.60	2.3		
100	290	14.05	2.5		
114	250	12.33	2.7		
129	225	10.88	3.0		
145	197	9.64	3.2		
163	176	8.59	3.6		
181	158	7.74	3.8		
206	139	6.79	4.2		
60	480	23.44	1.15	WMR67 WMRF67	4P
70	405	19.89	1.45		
78	365	17.95	1.60		
89	325	15.79	1.75		
94	305	14.91	1.80		
110	260	12.70	2.0		
121	235	11.54	2.1		
140	205	10.00	2.3		

Output speed (r/min)	Output torque (N.M)	Ratio (i)	Service Factor (fs)	Type	Motor Pole
3.0KW					
52	550	26.97	0.80	WMR57 WMRF57	4P
64	450	21.93	1.00		
75	380	18.60	1.20		
83	345	16.79	1.30		
95	300	14.77	1.45		
100	285	13.95	1.50		
118	245	11.88	1.65		
130	220	10.79	1.75		
150	191	9.35	1.95		
155	185	9.06	2.0		
176	163	7.97	2.2		
186	154	7.53	2.3		
218	131	6.41	2.6		
240	119	5.82	2.7		
277	103	5.05	3.0		
319	90	4.39	3.1		
128	225	21.93	2.0	WMR57 WMRF57	2P
151	190	18.60	2.4		
167	172	16.79	2.6		
190	151	14.77	2.9		
201	143	13.95	3.0		
236	122	11.88	3.3		
259	110	10.79	3.5		
86	330	16.22	0.85	WMR47 WMRF47	4P
96	300	14.56	0.90		
112	255	12.54	0.95		
119	240	11.79	1.00		
138	210	10.15	1.10		
154	186	9.07	1.20		
175	164	8.01	1.25		
181	159	7.76	1.05		
201	143	6.96	1.10		
233	123	6.00	1.25		
248	115	5.64	1.35		
288	99	4.85	1.50		
323	89	4.34	1.65		
365	78	3.83	1.85		
237	121	11.79	2.0	WMR47 WMRF47	2P
276	104	10.15	2.2		
309	93	9.07	2.4		
349	82	8.01	2.5		
361	79	7.76	2.1		
402	71	6.96	2.2		
467	61	6.00	2.5		
496	58	5.64	2.7		
577	50	4.85	3.0		
646	44	4.34	3.3		
731	39	3.83	3.7		
139	205	10.11	0.80	WMR37 WMRF37	4P
148	194	9.47	0.85		
176	163	7.97	0.95		
210	137	6.67	1.05		
247	116	5.67	1.25		
277	104	5.06	1.30		
324	88	4.32	1.45		
346	83	4.05	1.45		
411	70	3.41	1.60		

Output speed (r/min)	Output torque (N.M)	Ratio (i)	Service Factor (fs)	Type	Motor Pole
3.0KW					
277	103	10.11	1.65	WMR37 WMRF37	2P
296	97	9.47	1.70		
351	82	7.97	1.90		
420	68	6.67	2.1		
494	58	5.67	2.5		
553	52	5.06	2.6		
648	44	4.32	2.8		
692	41	4.05	3.0		
821	35	3.41	3.2		
4.0KW					
7.6	4620	187	0.95	MR107 R77 MRF107 R77	4P
7.3	4840	193	0.90		
8.2	4330	172	1.00		
8.2	4640	172.34	0.95	MR107 MRF107	4P
8.9	4270	158.68	1.00		
10	3820	141.83	1.15		
11	3430	127.68	1.25		
12	3110	115.63	1.40		
14	2760	102.53	1.55		
15	2490	92.70	1.70		
18	2110	78.57	2.0		
19	1960	72.88	2.2	MR107 MRF107	4P
22	1760	65.60	2.4		
24	1600	59.41	2.7		
27	1420	52.68	3.0		
12	3130	116.48	0.95	WMR97 WMRF97	4P
14	2780	103.44	1.10		
15	2490	92.48	1.20		
17	2240	83.15	1.35		
20	1940	72.17	1.55		
22	1750	65.21	1.70		
24	1610	59.92	1.85		
27	1430	53.21	2.1		
30	1280	47.58	2.3		
33	1150	42.78	2.6		
38	1000	37.13	3.0		
43	890	33.25	3.2		
44	860	32.05	3.0		
52	730	27.19	3.5		
57	675	25.03	4.2		
63	600	22.37	4.5		
71	540	20.14	4.8		
22	1710	63.62	0.90	WMR87 WMRF87	4P
24	1620	60.29	0.95		
27	1420	52.77	1.10		
30	1280	47.54	1.20		
34	1120	41.70	1.40		
39	990	36.80	1.55		
43	880	32.63	1.75		
51	750	27.86	2.0		
41	930	34.37	1.6		
45	840	31.37	1.85		
51	750	27.82	2.1		
61	630	23.38	2.5		
66	580	21.49	2.6		
74	515	19.08	2.8		
83	460	17.06	3.0		
92	415	15.34	3.2		
107	360	13.31	3.6		
119	320	11.92	3.8		

Output speed (r/min)	Output torque (N.M)	Ratio (i)	Service Factor (fs)	Type	Motor Pole
4.0KW					
39	990	36.83	0.85	WMR77 WMRF77	4P
42	900	33.47	0.90		
49	780	29.00	1.05		
56	680	25.23	1.15		
61	630	23.37	1.30		
66	575	21.43	1.40		
76	505	18.80	1.55		
80	480	17.82	1.65		
91	420	15.60	1.75		
101	380	14.05	1.90		
115	330	12.33	2.1		
131	295	10.88	2.3		
147	260	9.64	2.4		
165	230	8.59	2.7		
183	210	7.74	2.9		
209	183	6.79	3.2		
237	161	5.99	3.3		
267	143	5.31	3.6		
71	535	19.89	1.10	WMR67 WMRF67	4P
79	485	17.95	1.20		
90	425	15.79	1.30		
95	400	14.91	1.35		
112	340	12.70	1.50		
123	310	11.54	1.60		
142	270	10.00	1.75		
163	235	8.70	1.90		
182	210	7.79	1.80		
193	198	7.36	1.85		
227	169	6.27	1.95		
249	153	5.70	2.0		
288	133	4.93	2.2		
331	116	4.29	2.3		
76	500	18.60	0.90	WMR57 WMRF57	4P
85	450	16.79	1.00		
96	395	14.77	1.10		
102	375	13.95	1.15		
120	320	11.88	1.25		
132	290	10.79	1.35		
152	250	9.35	1.45		
157	245	9.06	1.55		
178	215	7.97	1.65		
189	205	7.53	1.75		
222	172	6.41	1.95		
244	157	5.82	2.0		
281	136	5.05	2.2		
323	118	4.39	2.4		
140	275	10.15	0.85	WMR47 WMRF47	4P
157	245	9.07	0.90		
177	215	8.01	0.95		
204	187	6.96	0.85		
237	161	6.00	0.95		
252	152	5.64	1.00		
293	131	4.85	1.15		
327	117	4.34	1.25		
371	103	3.83	1.40		

Output speed (r/min)	Output torque (N.M)	Ratio (i)	Service Factor (fs)	Type	Motor Pole
4.0KW					
176	215	16.22	1.25	WMR47 WMRF47	2P
196	195	14.56	1.35		
228	168	12.54	1.50		
242	158	11.79	1.55		
282	136	10.15	1.70		
315	121	9.07	1.80		
357	107	8.01	1.90		
369	104	7.76	1.55		
411	93	6.96	1.70		
477	80	6.00	1.95		
507	75	5.64	2.1		
589	65	4.85	2.3		
660	58	4.34	2.5		
746	51	3.83	2.8		
5.5KW					
11	4690	127.68	0.90	MR107 MRF107	4P
12	4250	115.63	1.00		
14	3770	102.53	1.15		
15	3400	92.70	1.25		
18	2890	78.57	1.50		
20	2680	72.88	1.60		
22	2410	65.60	1.80		
24	2180	59.41	1.95		
27	1930	52.68	2.2		
30	1750	47.63	2.5		
35	1480	40.37	2.9		
17	3050	83.15	1.00	WMR97 WMRF97	4P
20	2650	72.17	1.15		
22	2390	65.21	1.25		
24	2200	59.92	1.35		
27	1950	53.21	1.55		
30	1750	47.58	1.70		
33	1570	42.78	1.90		
39	1360	37.13	2.2		
43	1220	33.25	2.4	WMR97 WMRF97	4P
52	1010	27.58	2.6		
45	1180	32.05	2.2		
53	1000	27.19	2.6		
57	920	25.03	3.1		
64	820	22.37	3.3		
71	740	20.14	3.5		
78	670	18.24	3.7		
88	595	16.17	4.0		
30	1750	47.54	0.90	WMR87 WMRF87	4P
34	1530	41.70	1.00		
39	1350	36.80	1.15		
44	1200	32.63	1.30		
51	1020	27.86	1.45		
51	1020	27.82	1.50		
61	860	23.38	1.80		
66	790	21.49	1.90		
75	700	19.08	2.0		
84	625	17.06	2.2		
93	565	15.34	2.4		
107	490	13.31	2.6		
120	440	11.92	2.8		
144	365	9.89	3.2		
156	335	9.14	3.6		
174	300	8.22	3.8		
200	260	7.13	4.1		

Output speed (r/min)	Output torque (N.M)	Ratio (i)	Service Factor (fs)	Type	Motor Pole
5.5KW					
76	690	18.80	1.15	WMR77 WMRF77	4P
80	655	17.82	1.20		
92	575	15.60	1.30		
102	515	14.05	1.40		
116	455	12.33	1.50		
131	400	10.88	1.65		
148	355	9.64	1.80		
166	315	8.59	2.0		
185	285	7.74	2.2		
211	250	6.79	2.3		
239	220	5.99	2.5		
269	195	5.31	2.6		
91	580	15.79	0.95	WMR67 WMRF67	4P
96	550	14.91	1.00		
113	465	12.70	1.10		
124	425	11.54	1.20		
143	365	10.00	1.30		
164	320	8.70	1.40		
183	285	7.79	1.35		
194	270	7.36	1.35		
228	230	6.27	1.45		
251	210	5.70	1.50		
290	181	4.93	1.60		
333	158	4.29	1.70		
331	159	8.70	2.8	WMR67 WMRF67	2P
369	142	7.79	2.7		
391	134	7.36	2.8		
460	114	6.27	2.9		
506	104	5.70	3.0		
584	90	4.93	3.2		
671	78	4.29	3.5		
97	545	14.77	0.80	WMR57 WMRF57	4P
103	510	13.95	0.85		
120	435	11.88	0.95		
132	395	10.79	1.00		
153	345	9.35	1.10		
179	295	7.97	1.20		
190	275	7.53	1.25		
223	235	6.41	1.40		
246	215	5.82	1.50		
283	185	5.05	1.65		
326	161	4.39	1.75		
308	171	9.35	2.2	WMR57 WMRF57	2P
361	145	7.97	2.4		
383	137	7.53	2.5		
449	117	6.41	2.9		
494	106	5.82	3.0		
571	92	5.05	3.3		
656	80	4.39	3.5		
295	178	4.85	0.85	WMR47 WMRF47	4P
330	159	4.34	0.90		
373	141	3.83	1.00		
230	230	12.54	1.10	WMR47 WMRF47	2P
244	215	11.79	1.15		
284	185	10.15	1.25		
318	165	9.07	1.35		
359	146	8.01	1.40		
480	109	6.00	1.45		
511	103	5.64	1.50		
593	89	4.85	1.70		
664	79	4.34	1.85		
752	70	3.83	2.1		

Output speed (r/min)	Output torque (N.M)	Ratio (i)	Service Factor (fs)	Type	Motor Pole
7.5KW					
15	4640	92.70	0.95	MR107 MRF107	4P
18	3940	78.57	1.10		
20	3650	72.88	1.20		
22	3290	65.60	1.30		
24	2980	59.41	1.45		
27	2640	52.68	1.65		
30	2390	47.63	1.80		
35	2020	40.37	2.1		
41	1770	35.26	2.4		
48	1480	29.49	2.9		
46	1540	30.77	2.8		
52	1380	27.58	3.1		
57	1250	24.90	3.5		
63	1130	22.62	3.8		
24	3000	59.92	1.00	WMR97 WMRF97	4P
27	2670	53.21	1.15		
30	2380	47.58	1.25		
33	2140	42.78	1.40		
39	1860	37.13	1.60		
43	1670	33.25	1.75		
52	1380	27.58	1.95		
45	1610	32.05	1.60		
53	1360	27.19	1.90		
57	1250	25.03	2.3		
64	1120	22.37	2.4		
71	1010	20.14	2.6		
78	910	18.24	2.7		
39	1840	36.80	0.85	WMR87 WMRF87	4P
44	1640	32.63	0.95		
51	1400	27.86	1.05		
51	1390	27.82	1.10		
61	1170	23.40	1.30		
66	1080	21.51	1.40		
75	960	19.08	1.50		
84	860	17.06	1.65		
93	770	15.34	1.75		
107	670	13.31	1.90		
120	600	11.92	2.1		
144	495	9.89	2.4		
156	460	9.14	2.6		
174	410	8.22	2.8		
200	355	7.13	3.0		
224	320	6.39	3.2		
270	265	5.30	3.4		
76	940	18.80	0.85	WMR77 WMRF77	4P
80	890	17.82	0.85		
92	780	15.60	0.95		
102	705	14.05	1.00		
116	615	12.33	1.10		
131	545	10.88	1.20		
148	485	9.64	1.30		
166	430	8.59	1.45		
185	390	7.74	1.55		
211	340	6.79	1.70		
239	300	5.99	1.80		
269	265	5.31	1.90		

Output speed (r/min)	Output torque (N.M)	Ratio (i)	Service Factor (fs)	Type	Motor Pole
7.5KW					
113	635	12.70	0.80	WMR67 WMRF67	4P
124	580	11.54	0.85		
143	500	10.00	0.95		
164	435	8.70	1.00		
183	390	7.79	0.95		
194	370	7.36	1.00		
228	315	6.27	1.05		
251	285	5.70	1.10		
290	245	4.93	1.15		
333	215	4.29	1.25		
179	400	7.97	0.90	WMR57 WMRF57	4P
190	375	7.53	0.95		
223	320	6.41	1.05		
246	290	5.82	1.10		
283	255	5.05	1.20		
326	220	4.39	1.25		
196	365	14.77	1.20	WMR57 WMRF57	2P
208	345	13.95	1.25		
244	295	11.88	1.40		
269	265	10.79	1.45		
310	230	9.35	1.60		
364	197	7.97	1.80		
385	186	7.53	1.90		
452	158	6.41	2.1		
498	144	5.82	2.2		
575	125	5.05	2.5		
660	108	4.39	2.6		
11KW					
22	4790	65.60	0.90	MR107 MRF107	4P
24	4330	59.41	1.00		
27	3840	52.68	1.10		
30	3470	47.63	1.25		
36	2940	40.37	1.45		
41	2570	35.26	1.65		
49	2150	29.49	2.0		
47	2240	30.77	1.90		
52	2010	27.58	2.1		
58	1820	24.90	2.4		
64	1650	22.62	2.6		
72	1460	20.07	2.9		
79	1330	18.21	3.2		
34	3120	42.78	0.95	WMR97 WMRF97	4P
39	2710	37.13	1.10		
43	2430	33.25	1.20		
52	2010	27.58	1.35		
58	1830	25.03	1.55		
64	1630	22.37	1.65		
71	1470	20.14	1.80		
79	1330	18.24	1.90		
89	1180	16.17	2.0		
98	1070	14.62	2.2		
116	900	12.39	2.4		
133	790	10.83	2.7		
155	675	9.29	3.0		
172	610	8.39	3.3		
202	520	7.12	3.8		
232	455	6.21	4.2		
67	1570	21.49	0.95	WMR87 WMRF87	4P
75	1390	19.08	1.05		
84	1250	17.06	1.10		
94	1120	15.34	1.20		
108	970	13.31	1.30		

Output speed (r/min)	Output torque (N.M)	Ratio (i)	Service Factor (fs)	Type	Motor Pole
11KW					
121	870	11.92	1.40	WMR87 WMRF87	4P
145	720	9.89	1.65		
158	665	9.14	1.80		
175	600	8.22	1.95		
202	520	7.13	2.1		
225	465	6.39	2.2		
272	385	5.30	2.3		
132	795	10.88	0.85	WMR77 WMRF77	4P
149	705	9.64	0.90		
186	565	7.74	1.10		
212	495	6.79	1.15		
240	435	5.99	1.25		
271	390	5.31	1.30		
15KW					
31	4670	47.63	0.90	MR107 MRF107	4P
36	3960	40.37	1.10		
41	3460	35.26	1.25		
50	2890	29.49	1.50		
47	3020	30.77	1.40		
53	2710	27.58	1.60		
59	2440	24.90	1.75		
65	2220	22.62	1.95		
73	1970	20.07	2.2		
80	1790	18.21	2.4		
93	1540	15.65	2.8		
107	1340	13.66	3.2		
53	2710	27.58	1.00	WMR97 WMRF97	4P
58	2460	25.03	1.15		
65	2200	22.37	1.25		
72	1980	20.14	1.30		
80	1790	18.24	1.40		
90	1590	16.17	1.50		
100	1430	14.62	1.60		
118	1220	12.39	1.80		
135	1060	10.83	1.95		
157	910	9.29	2.2		
174	820	8.39	2.5		
205	700	7.12	2.9		
235	610	6.21	3.1		
85	1680	17.06	0.85	WMR87 WMRF87	4P
95	1510	15.34	0.90		
110	1310	13.31	1.00		
122	1170	11.92	1.05		
147	970	9.89	1.20		
160	900	9.14	1.35		
178	810	8.22	1.45		
205	700	7.13	1.55		
229	625	6.39	1.65		
275	520	5.30	1.75		
18.5KW					
36	4870	40.37	0.90	MR107 MRF107	4P
42	4250	35.26	1.00		
50	3560	29.49	1.20		
59	3000	24.90	1.45		
65	2730	22.62	1.60		

Output speed (r/min)	Output torque (N.M)	Ratio (i)	Service Factor (fs)	Type	Motor Pole
18.5KW					
73	2420	20.07	1.80	MR107 MRF107	4P
80	2200	18.21	1.95		
94	1890	15.65	2.3		
107	1650	13.66	2.6		
126	1400	11.59	3.1		
145	1220	10.13	3.5		
186	950	7.86	3.1		
220	800	6.66	3.7		
73	2430	20.14	1.05	WMR97 WMRF97	4P
80	2200	18.24	1.15		
91	1950	16.17	1.25		
100	1760	14.62	1.30		
118	1490	12.39	1.45		
135	1310	10.83	1.60		
158	1120	9.29	1.80		
175	1010	8.39	2.0		
206	860	7.12	2.3		
236	750	6.21	2.5		
282	625	5.20	2.8		
326	545	4.50	3.0		
110	1610	13.33	0.80	WMR87 WMRF87	4P
123	1440	11.93	0.85		
148	1190	9.90	1.00		
160	1100	9.14	1.10		
178	990	8.22	1.15		
205	860	7.13	1.25		
229	770	6.39	1.30		
276	640	5.30	1.40		
22KW					
42	5060	35.26	0.85	MR107 MRF107	4P
50	4230	29.49	1.00		
59	3570	24.90	1.20		
65	3240	22.62	1.35		
73	2880	20.07	1.50		
80	2610	18.21	1.65		
94	2240	15.65	1.90		
107	1960	13.66	2.2		
126	1660	11.59	2.6		
145	1450	10.13	3.0		
171	1230	8.56	3.5		
186	1130	7.86	2.6		
220	960	6.66	3.1		
252	840	5.82	3.6		
73	2890	20.14	0.90	WMR97 WMRF97	4P
80	2620	18.24	0.95		
91	2320	16.17	1.05		
100	2100	14.62	1.10		
118	1780	12.39	1.25		
135	1550	10.83	1.35		
158	1330	9.29	1.50		
175	1200	8.39	1.70		
206	1020	7.12	1.95		
236	890	6.21	2.1		
282	745	5.20	2.4		
326	645	4.50	2.5		

Output speed (r/min)	Output torque (N.M)	Ratio (i)	Service Factor (fs)	Type	Motor Pole
22KW					
148	1420	9.89	0.85	WMR87 WMRF87	4P
160	1310	9.14	0.90		
178	1180	8.22	1.00		
205	1020	7.13	1.05		
229	920	6.39	1.10		
276	760	5.30	1.20		
30KW					
73	3910	20.07	1.10	MR107 MRF107	4P
81	3550	18.21	1.20		
94	3050	15.65	1.40		
108	2660	13.66	1.60		
127	2260	11.59	1.90		
145	1970	10.13	2.2		
172	1670	8.56	2.6		
187	1530	7.86	1.95		
221	1300	6.66	2.3		
252	1140	5.82	2.6		
299	960	4.92	3.0		
101	2850	14.62	0.80	WMR97 WMRF97	4P
119	2420	12.39	0.90		
136	2110	10.83	1.00		
158	1810	9.29	1.10		
175	1640	8.39	1.25		
207	1390	7.12	1.45		
237	1210	6.21	1.55		
283	1010	5.20	1.75		
327	880	4.50	1.85		
37KW					
73	4820	20.07	0.90	MR107 MRF107	4P
81	4380	18.21	1.00		
94	3760	15.65	1.15		
108	3280	13.66	1.30		
127	2790	11.59	1.55		
145	2430	10.13	1.75		
172	2060	8.56	2.1		
187	1890	7.86	1.55		
221	1600	6.66	1.85		
252	1400	5.82	2.1		
299	1180	4.92	2.5		
45KW					
94	4580	15.65	0.95	MR107 MRF107	4P
108	3990	13.66	1.10		
127	3390	11.59	1.25		
145	2960	10.13	1.45		
172	2500	8.56	1.70		
187	2300	7.86	1.30		
221	1950	6.66	1.50		
252	1700	5.82	1.78		
299	1440	4.92	2.0		

WMR37

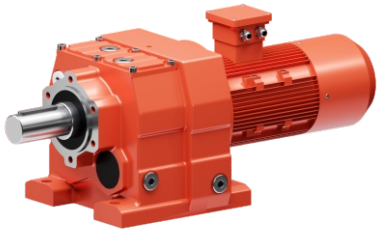

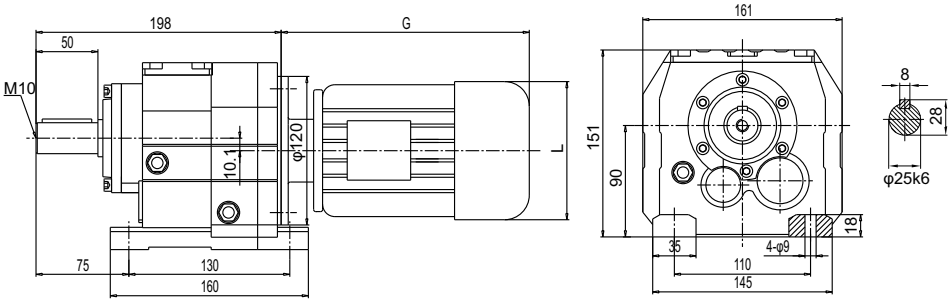

WMRF37

(Φ120)

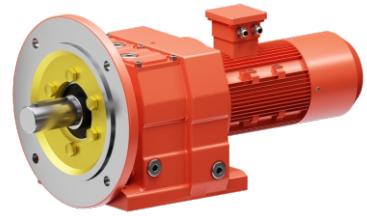

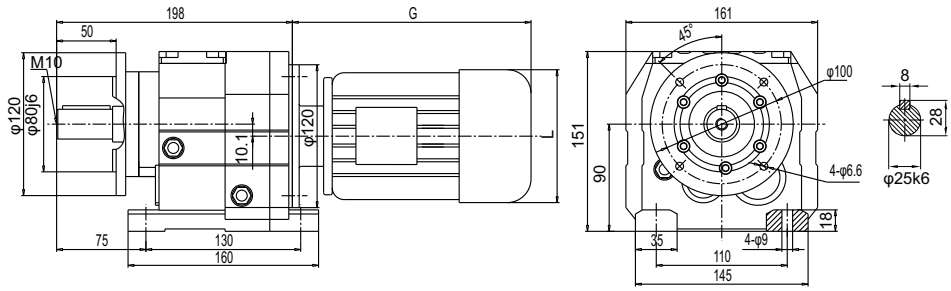

WMRF37

(Φ160)

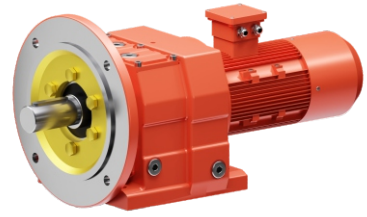

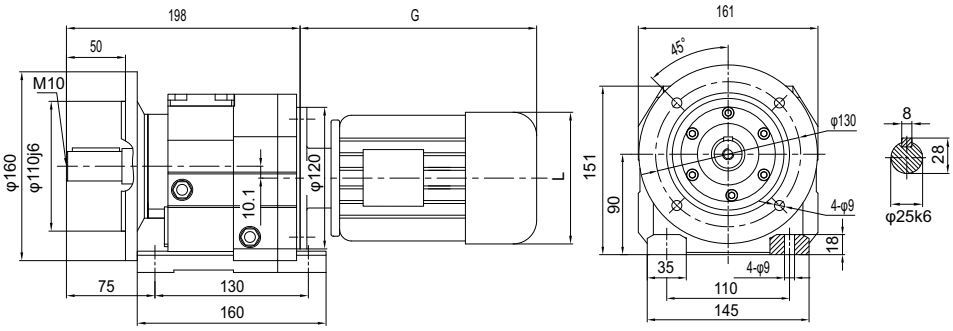

WMR..S37

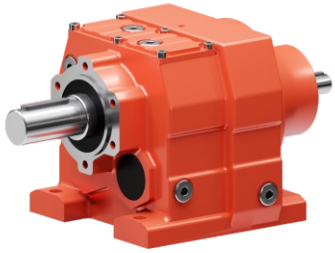

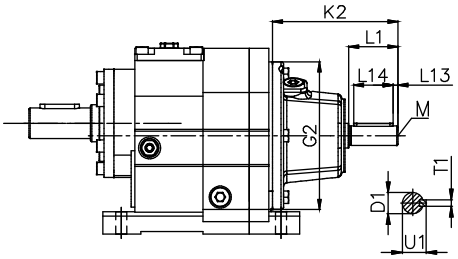

Input Shaft Kit	D1	G2	K2	L1	L13	L14	M	T1	U1
AD1 (Φ120)	Φ16k6	Φ120	102	40	4	32	M5	5	18
AD2 (Φ120)	Φ19k6		129	40	4	32	M6	6	21.5

WMR47



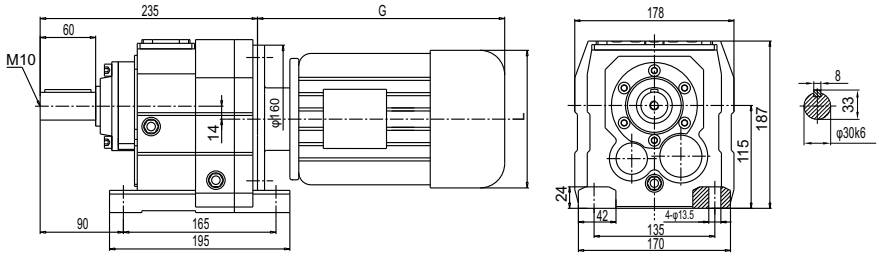

WMRF47
(Φ140)

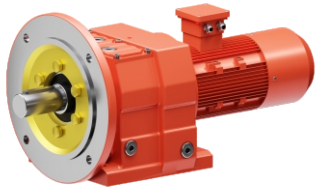

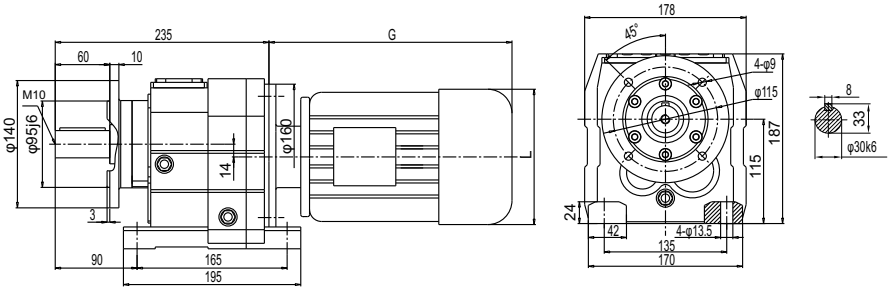

WMRF47
(Φ160)

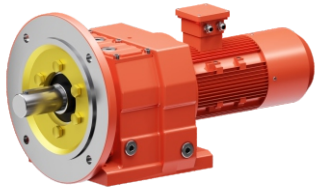

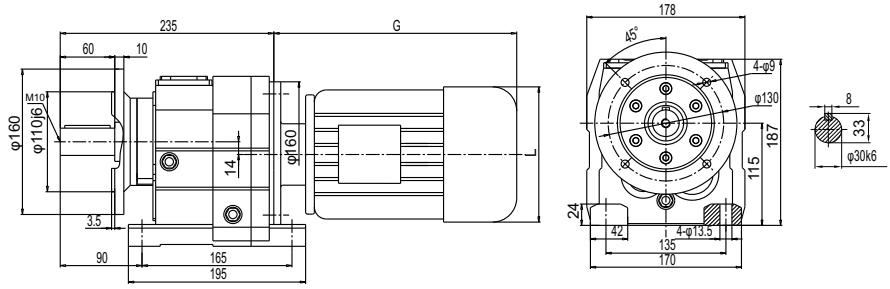

WMRF47
(Φ200)

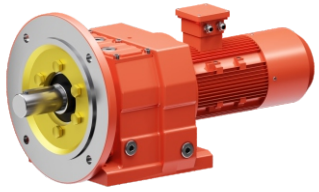

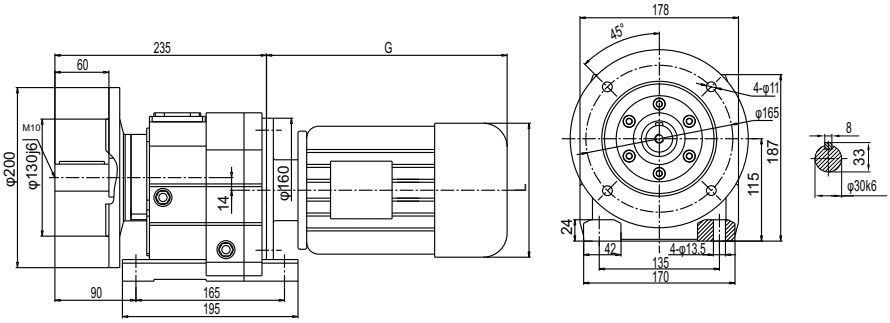

WMR..S47

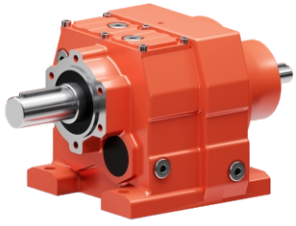

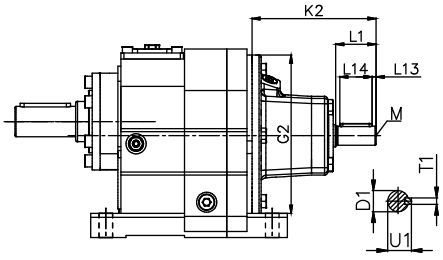

Input Shaft Kit	D1	G2	K2	L1	L13	L14	M	T1	U1
AD2 (Φ160)	Φ19k6	Φ160	123	40	4	32	M6	6	21.5
AD3 (Φ160)	Φ24k6		159	50	5	40	M8	8	27

WMR57

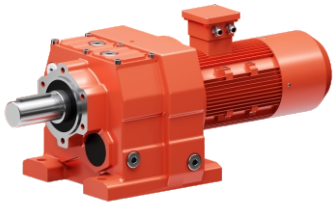

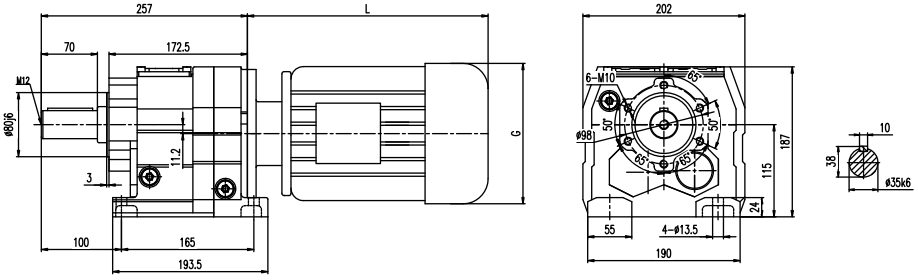

WMRF57
(Φ160)

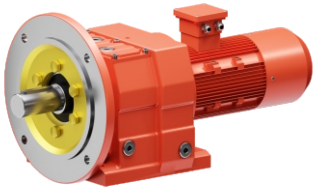

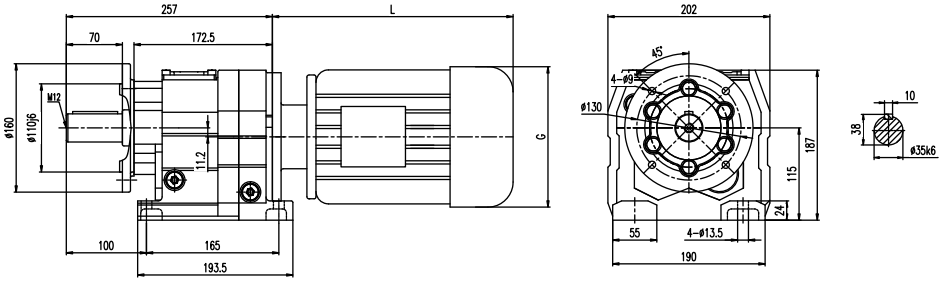

WMRF57
(Φ200)

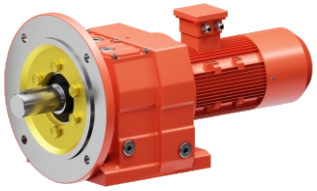

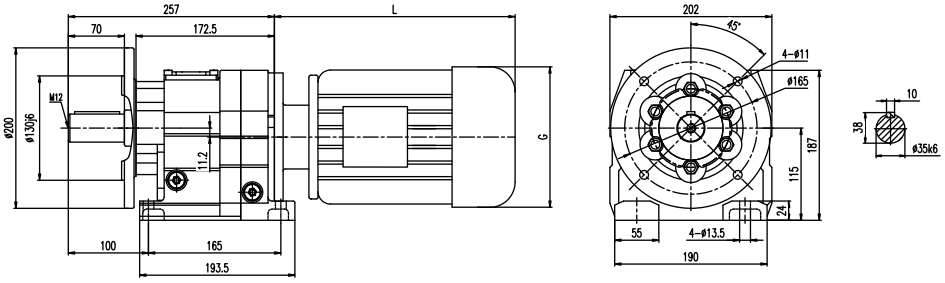

WMRF57
(Φ250)

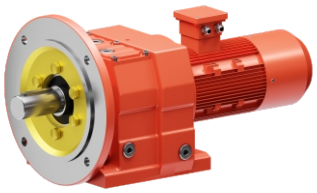

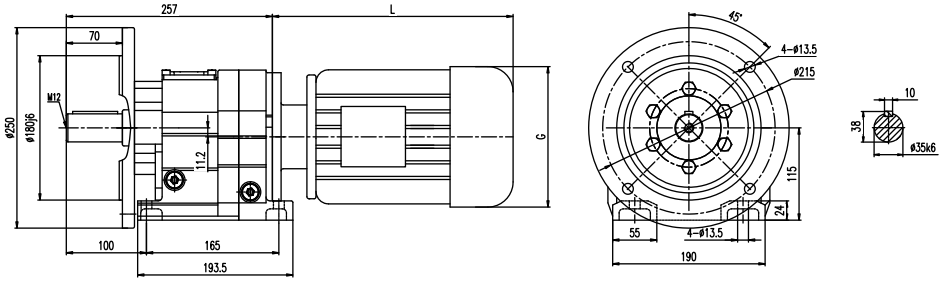

WMR..S57

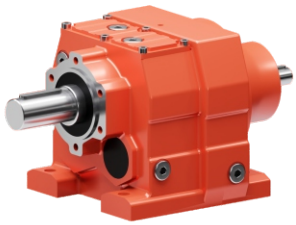

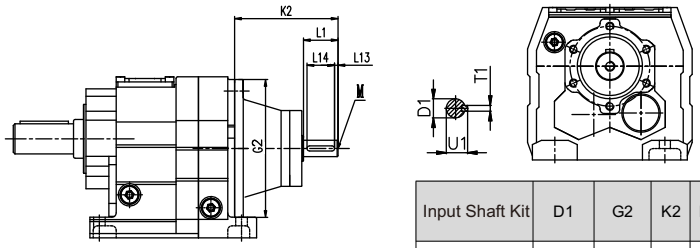

Input Shaft Kit	D1	G2	K2	L1	L13	L14	M	T1	U1
AD2 (Φ160)	Φ19k6	Φ160	123	40	4	32	M6	6	21.5
AD3 (Φ160)	Φ24k6		159	50	5	40	M8	8	27

WMR67

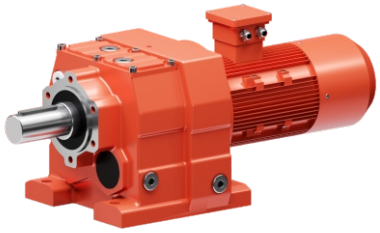

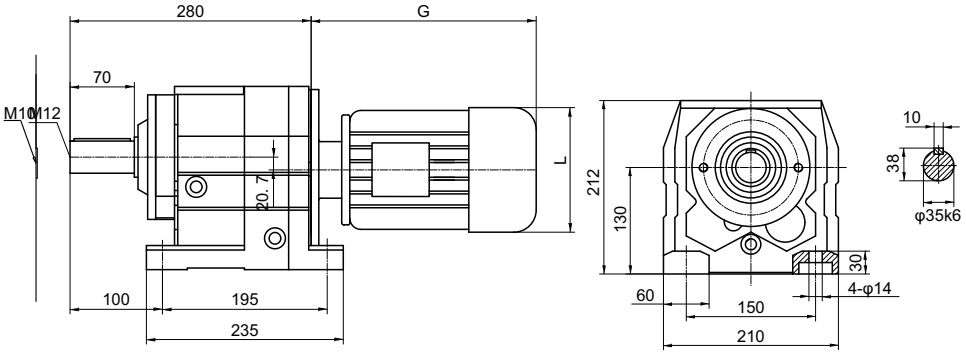

WMRF67

(Φ200)

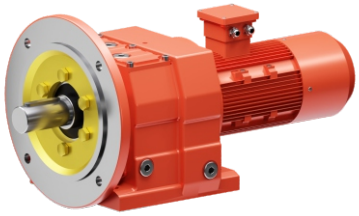

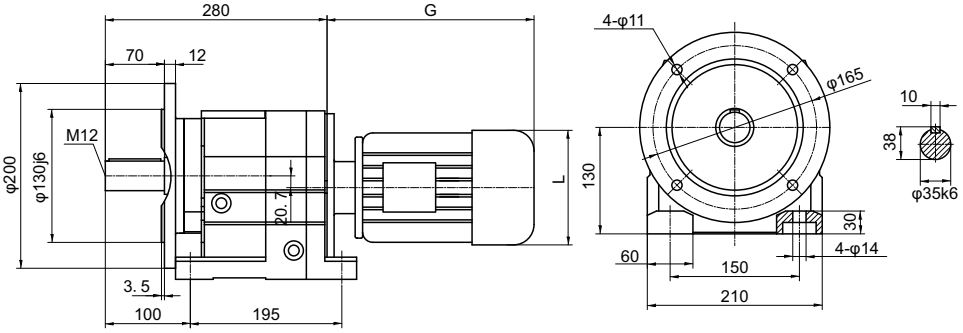

WMRF67

(Φ250)

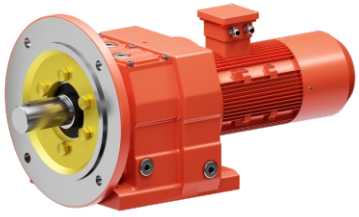

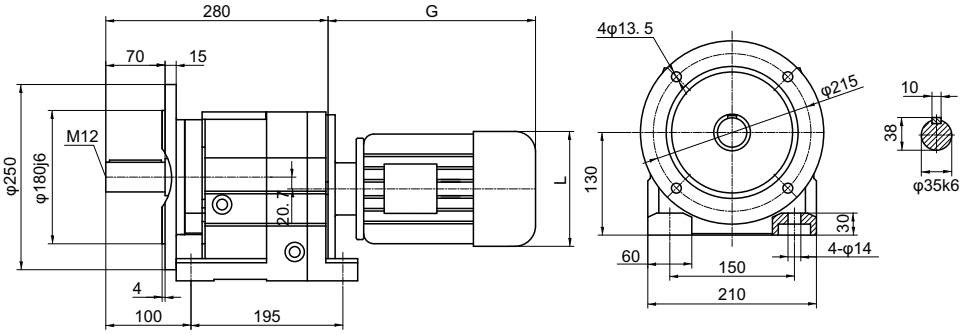

WMR..S67

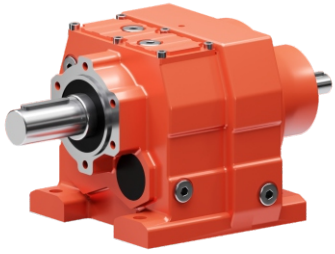

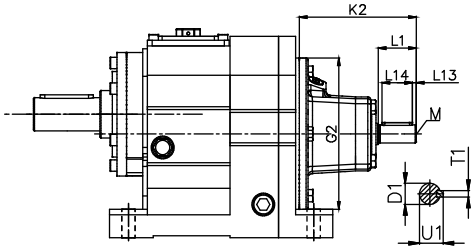

Input Shaft Kit	D1	G2	K2	L1	L13	L14	M	T1	U1
AD2 (Φ160)	Φ19k6	Φ160	123	40	4	32	M6	6	21.5
AD3 (Φ160)	Φ24k6		159	50	5	40	M8	8	27

WMR77

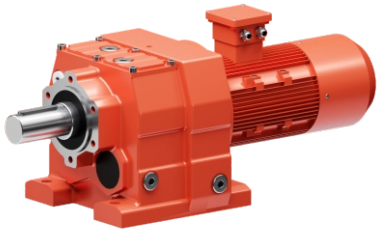

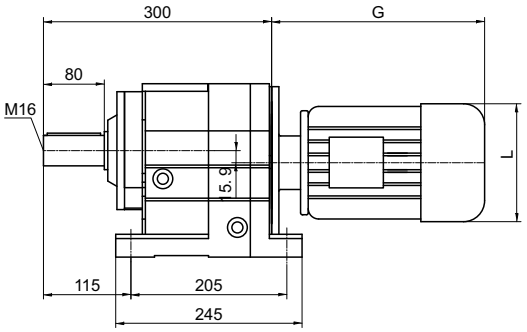

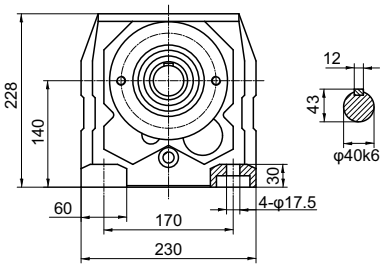

WMRF77

(Φ250)

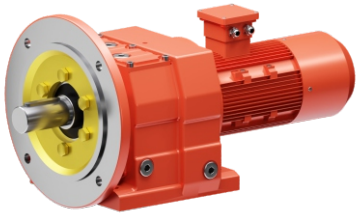

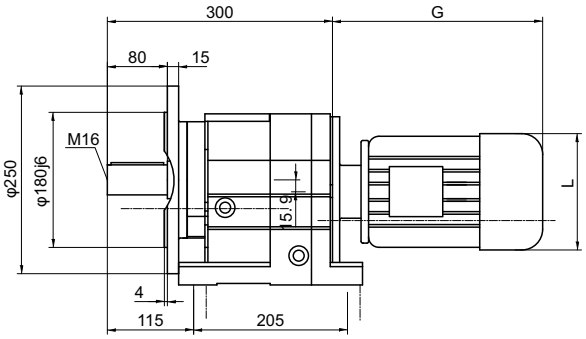

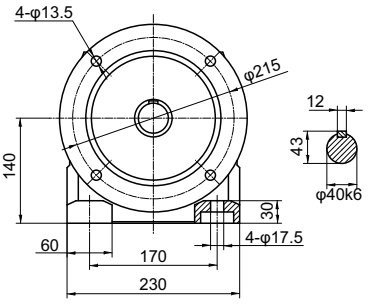

WMRF77

(Φ300)

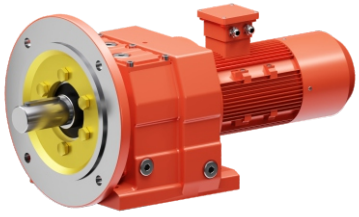

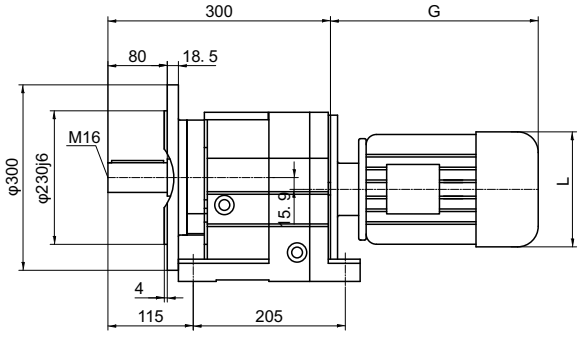

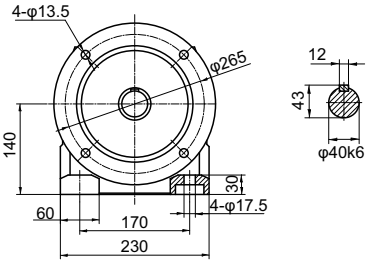

WMR..S77

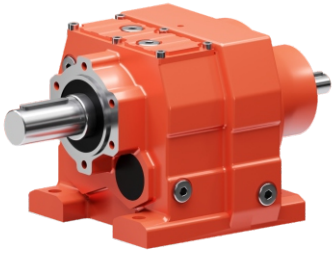

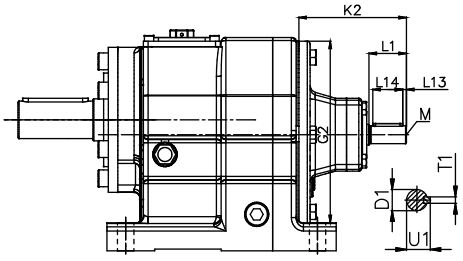

Input Shaft Kit	D1	G2	K2	L1	L13	L14	M	T1	U1
AD2 (Φ200)	Φ19k6	Φ200	115	40	4	32	M6	6	21.5
AD3 (Φ200)	Φ24k6		151	50	5	40	M8	8	27
AD4 (Φ200)	Φ38k6		224	80	7	70	M12	10	41

WMR87

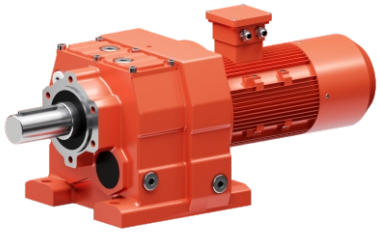

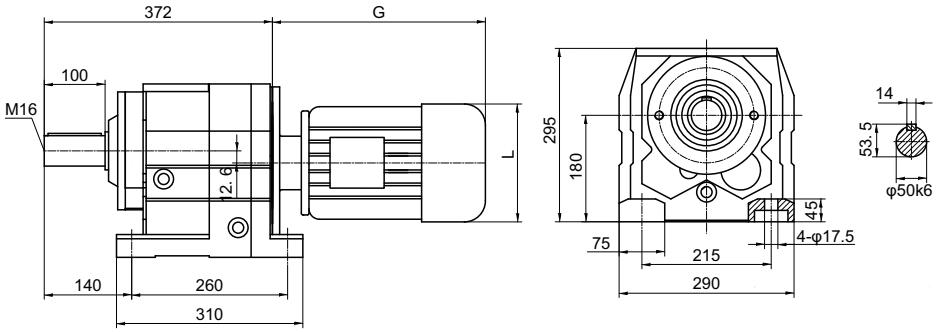

WMRF87
(Φ300)

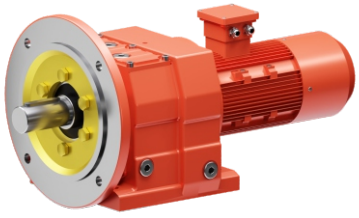

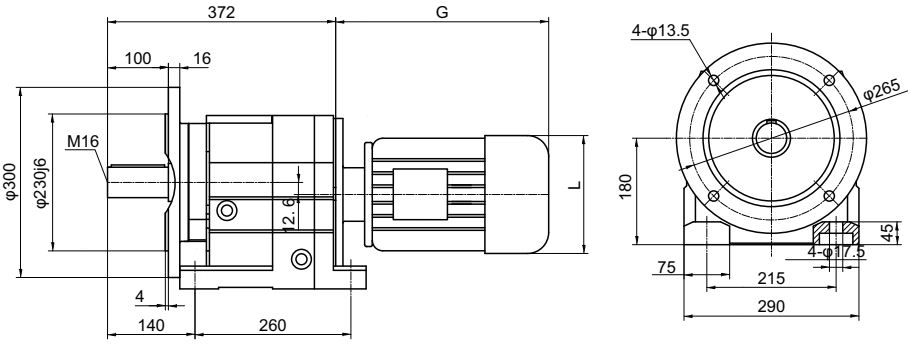

WMRF87
(Φ350)

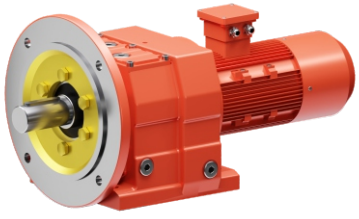

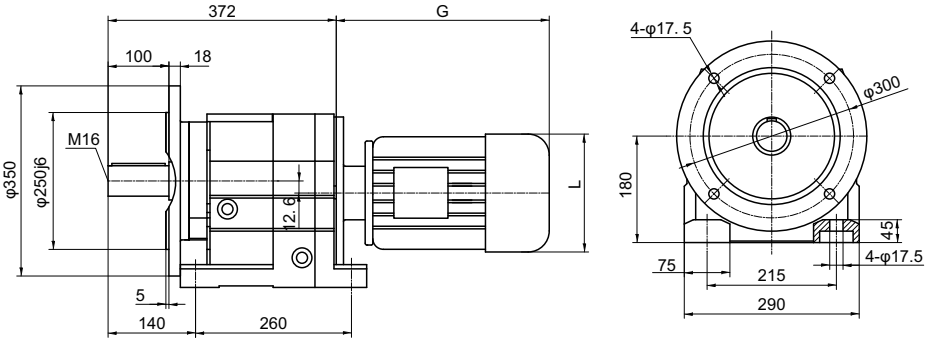

WMR..S87

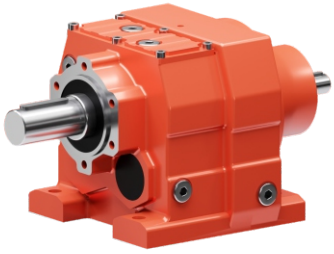

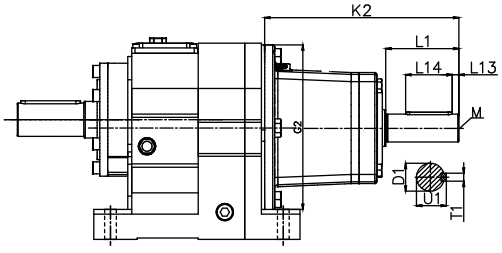

Input Shaft Kit	D1	G2	K2	L1	L13	L14	M	T1	U1
AD2 (Φ250)	Φ19k6	Φ250	110	40	4	32	M6	6	21.5
AD3 (Φ250)	Φ28k6		156	60	5	50	M10	8	31
AD4 (Φ250)	Φ38k6		219	80	7	70	M12	10	41
AD5 (Φ250)	Φ42k6		292	110	10	70	M16	12	45

WMR87

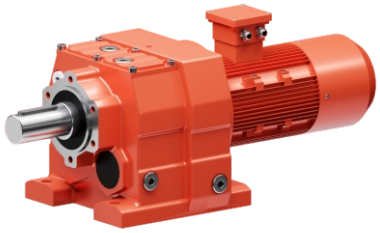

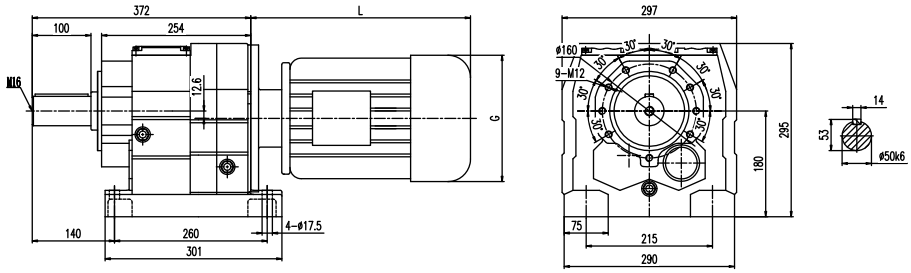

WMRF87
(Φ300)

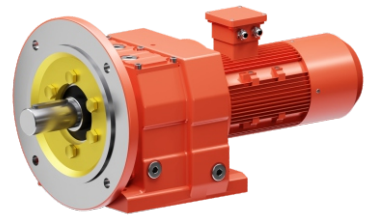

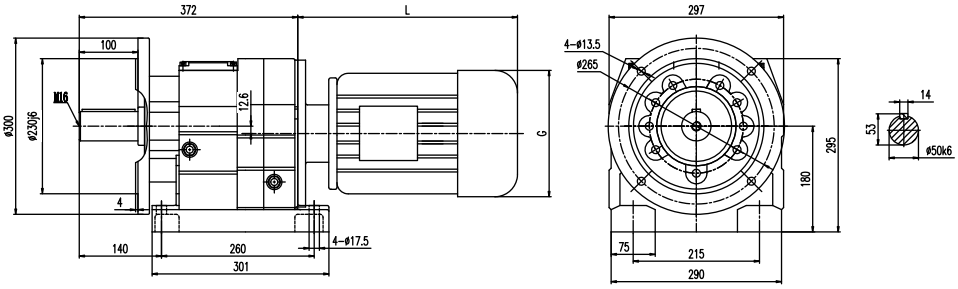

WMRF87
(Φ350)

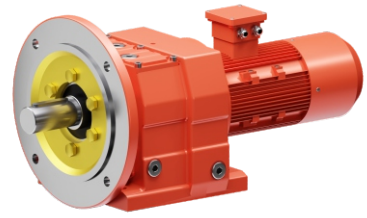

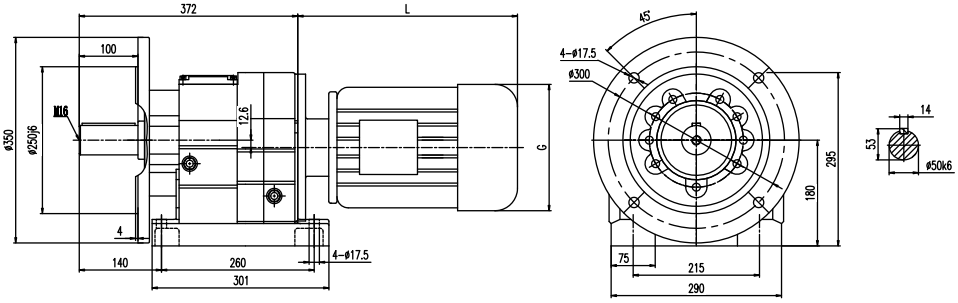

WMR..S87

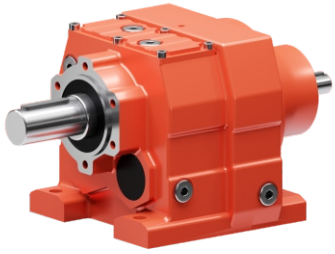

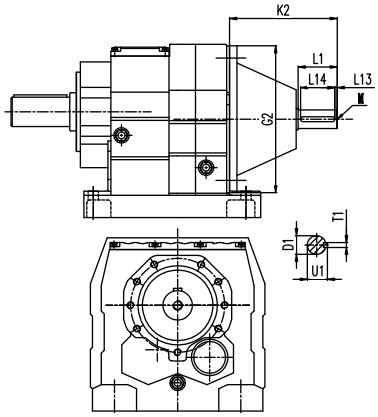

Input Shaft Kit	D1	G2	K2	L1	L13	L14	M	T1	U1
AD2 (Φ250)	Φ19k6	Φ250	110	40	4	32	M6	6	21.5
AD3 (Φ250)	Φ28k6		156	60	5	50	M10	8	31
AD4 (Φ250)	Φ38k6		219	80	7	70	M12	10	41
AD5 (Φ250)	Φ42k6		292	110	10	70	M16	12	45

WMR97

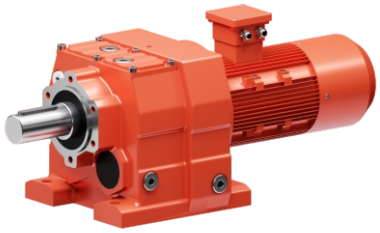

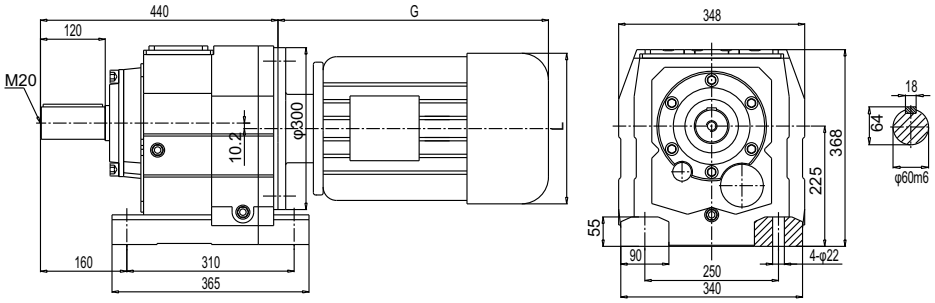

WMRF97

(Φ350)

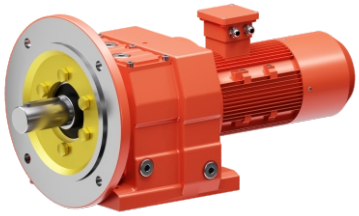

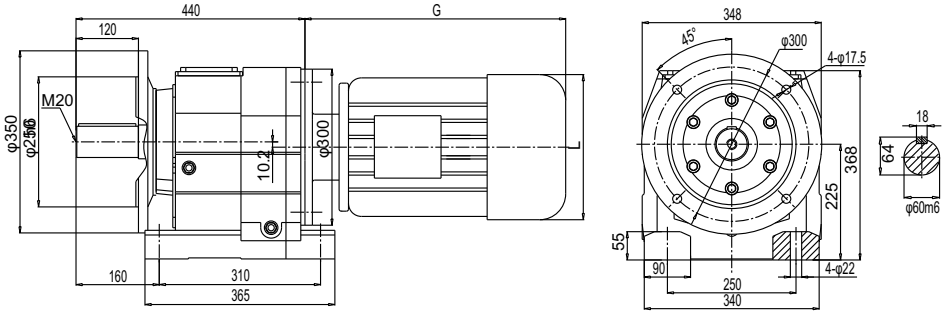

WMRF97

(Φ450)

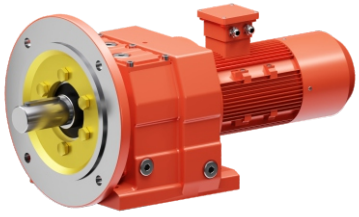

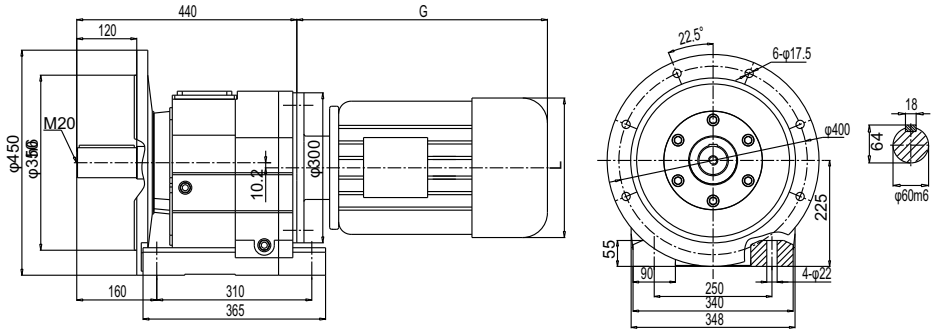

WMR..S97

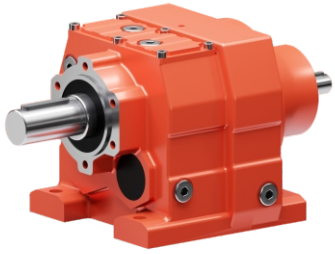

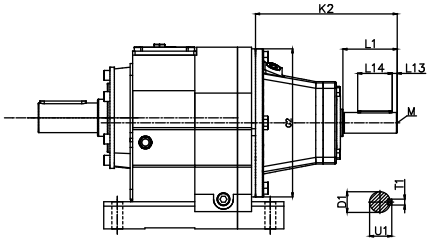

Input Shaft Kit	D1	G2	K2	L1	L13	L14	M	T1	U1
AD3 (Φ300)	Φ28k6	Φ300	151	60	5	50	M10	8	31
AD4 (Φ300)	Φ38k6		214	80	7	70	M12	10	41
AD5 (Φ300)	Φ42k6		287	110	10	70	M16	12	45
AD6 (Φ300)	Φ48k6		327	110	10	80	M16	14	51.5

MR107

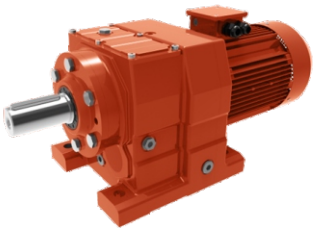

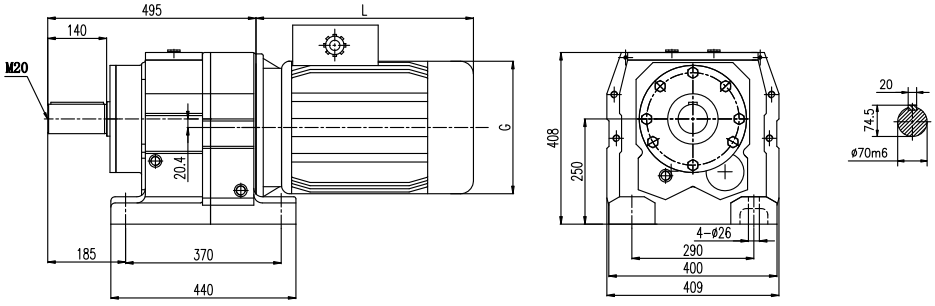

MRF107

(Φ350)

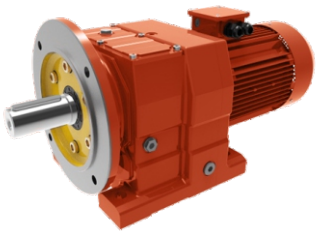

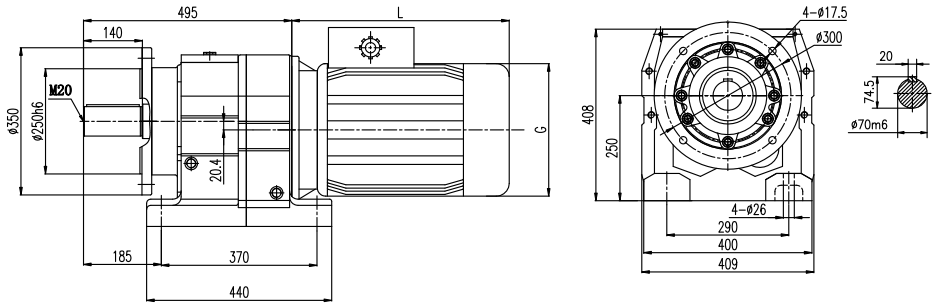

MRF107

(Φ450)

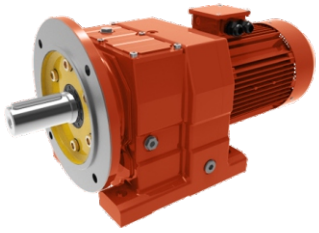

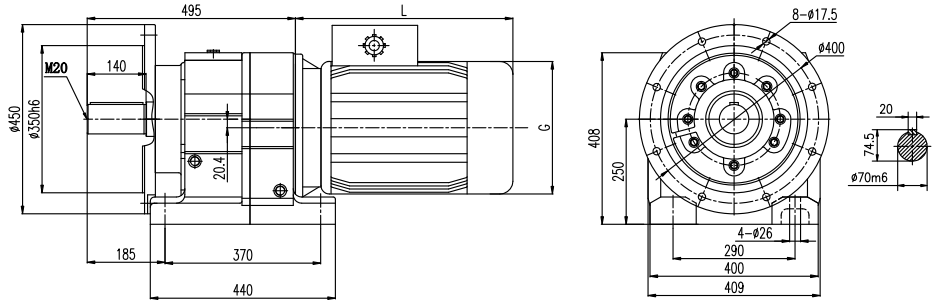

MR..S107

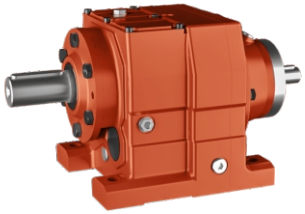

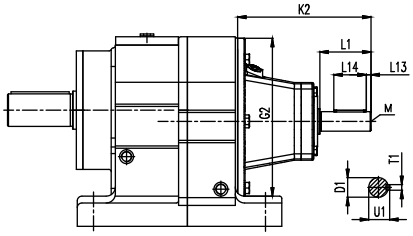

Input Shaft Kit	D1	G2	K2	L1	L13	L14	M	T1	U1
AD3 (Φ350)	Φ28k6	Φ350	145	60	5	50	M10	8	31
AD4 (Φ350)	Φ38k6		208	80	7	70	M12	10	41
AD5 (Φ350)	Φ42k6		281	110	10	70	M16	12	45
AD6 (Φ350)	Φ48k6		321	110	10	80	M16	14	51.5

WMR37-MR107 Mounting Position Example

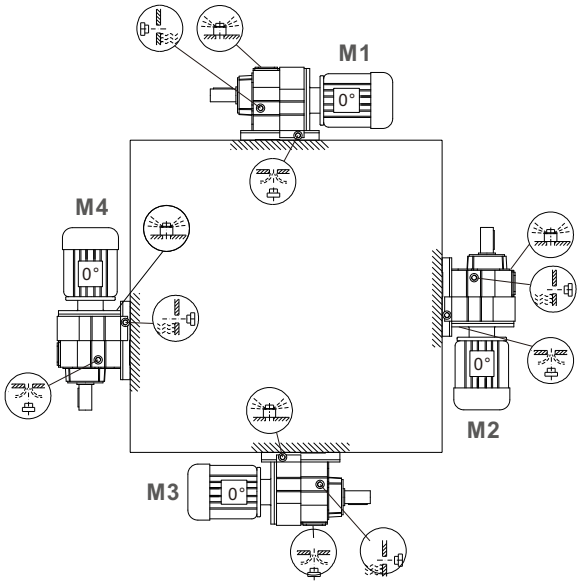

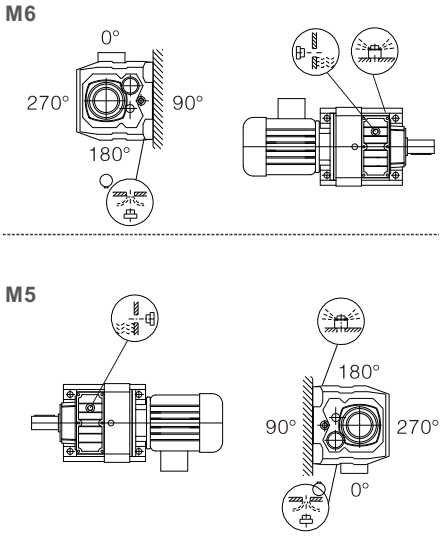

WMRF37-MRF107 Mounting Position Example

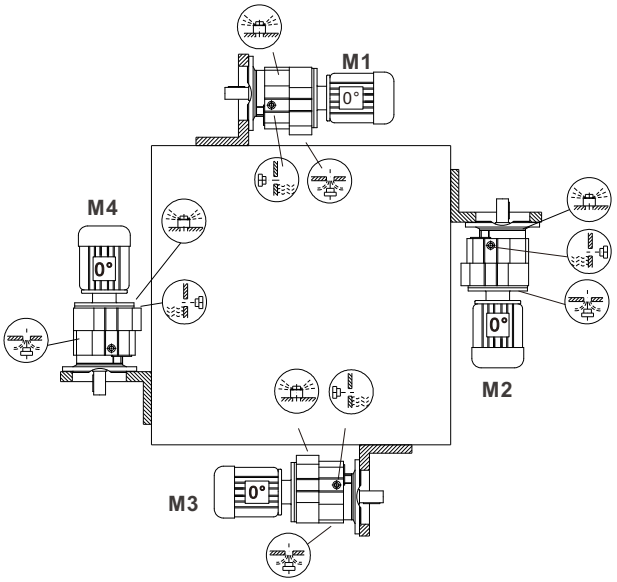

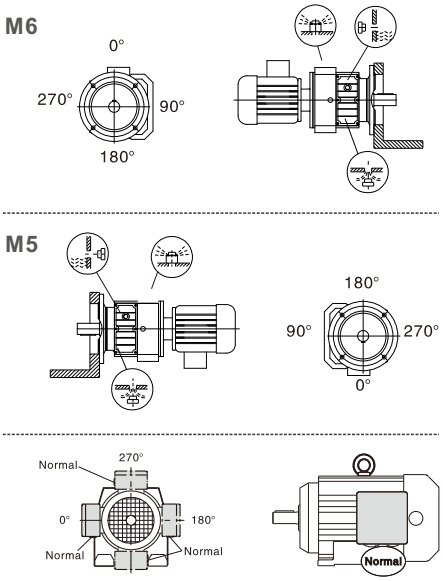

WMR Series Oil Capacity Table (Unit:L)

Mounting Position Model	M1	M2	M3	M4	M5	M6
WMR37	0.7	1.0	0.7	0.8	0.9	0.9
WMR47	0.9	1.9	0.9	1.8	1.8	1.8
WMR57	1.5	3.2	1.9	3.2	2.2	2.2
WMR67	1.7	3.5	2.2	3.5	2.5	2.5
WMR77	1.9	3.9	2.6	3.9	3.1	3.1
WMR87	4.0	8.0	5.0	8.0	6.0	6.0
WMR97	7.2	13.0	10.5	12.8	8.2	8.2
MR107	12.6	18.0	14.0	18.0	12.0	12.0

MKA Series

Modular Helical Gearbox

- Based on design of the traditional helical gearbox , as well as to meet strong market demand, WUMA combines the European advanced technical experience, after three years reserch and development, MKA series modular gearbox access to market successfully.

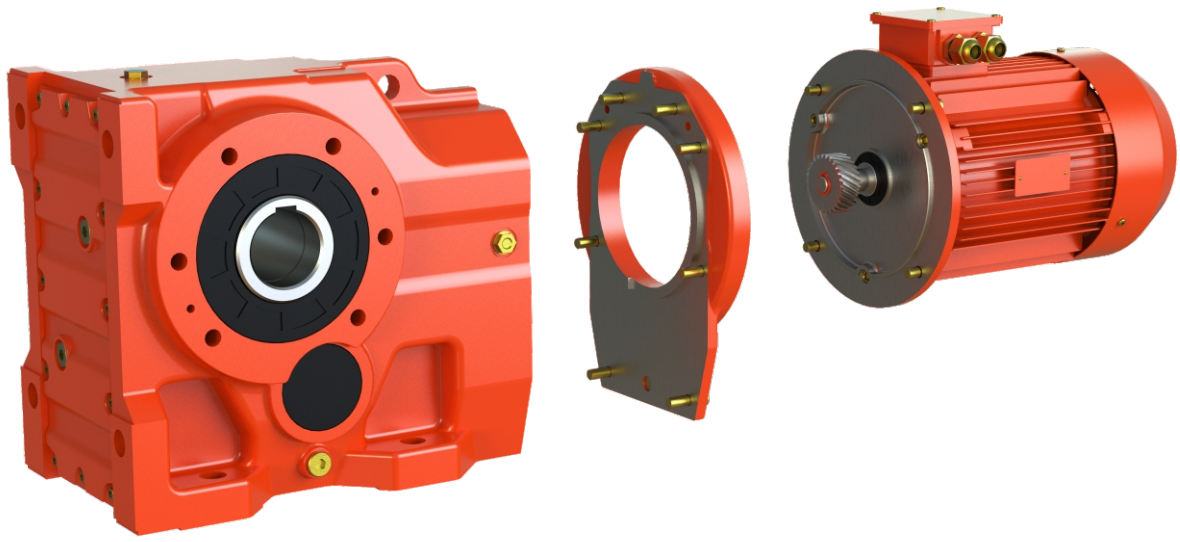

Characteristics

- Saving the inventory investment and warehouse space.
- High transmisson efficiency, the single machine can reach as much as 96%.
- Modularity allows distributors creat any new ratio quickly and flexiblyby themselves to shorten the lead time greatly.
- Modular design can provide various kinds of ratio combination only through the simple transformation of high speed gears.

The product structure

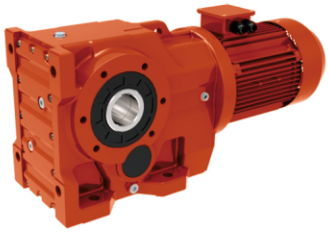

MKAB Series

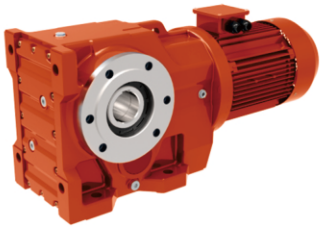

MKAZ Series

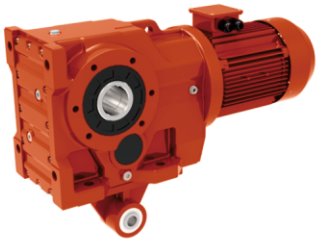

MKAT Series

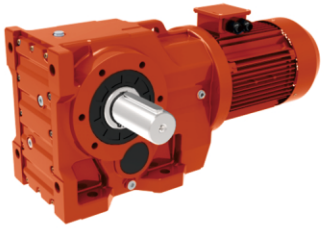

MK Series

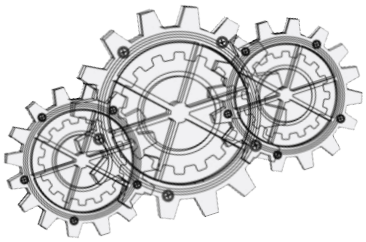



MK..S Series

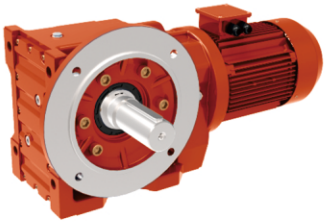

MKF Series



MKAF Series

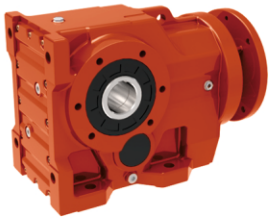

MK..Series with input flange

Working Environment

- Without industry limitation.
- Suitable for normal-reverse rotation.
- The working place should be lower than 1,000 meters above sea-level.
- Please consult our technical supporting deparment for other circumstances.
- Working temperature:-40℃~50℃（The lubrication should be heated until above 0℃ if temperature below 0℃.）
- The input speed should be less than 3,000 r/m,the circumferential speed of the gear should not exceed 20m/s.

Product Disassembly Graph

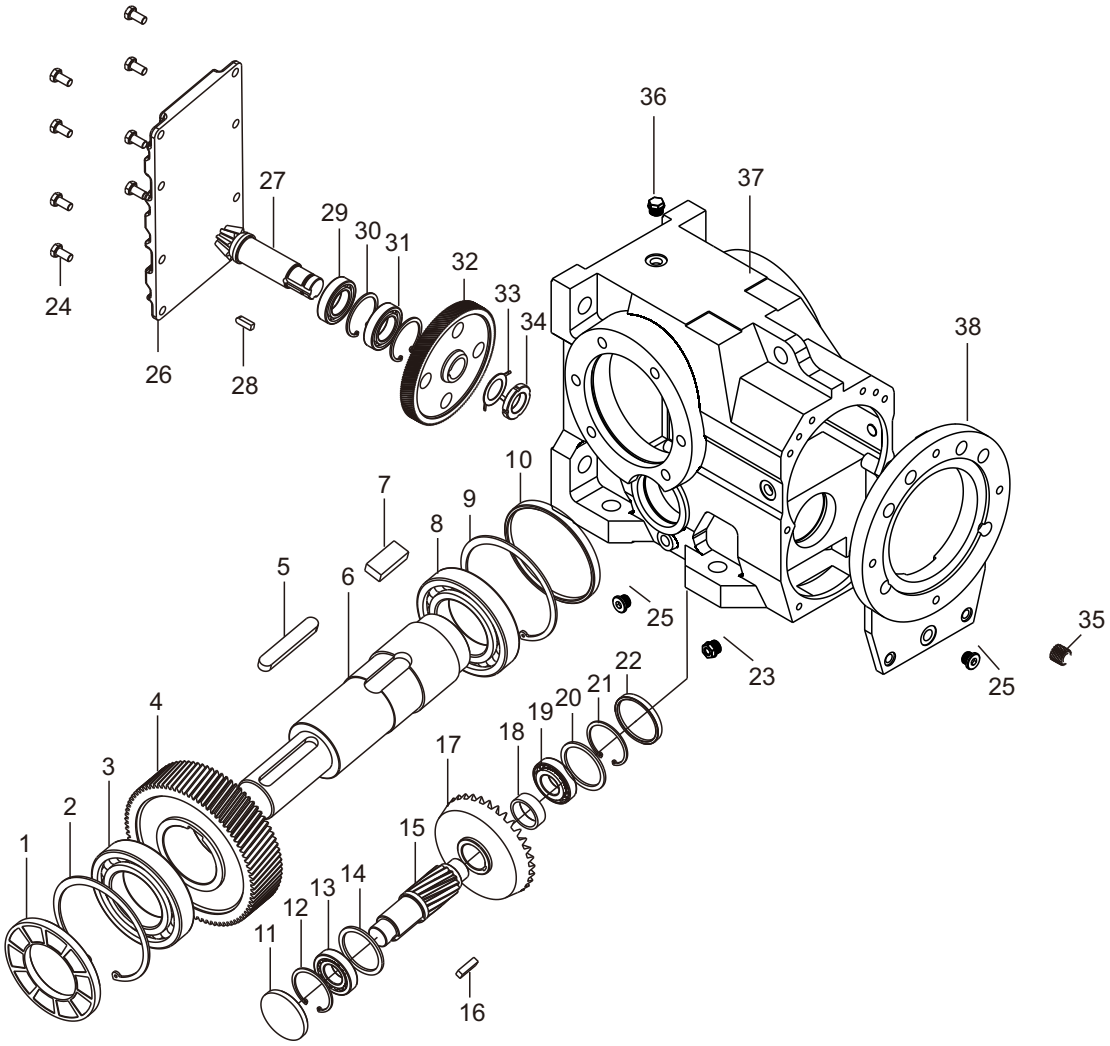

1.Oil seal
2.Circlip for hole
3.Bearing
4.Third stage big gear
5.Key
6.Output shaft
7.Key
8.Bearing
9.Circlip for hole
10.Seal cover
11.Seal cover
12.Circlip for hole
13.Bearing
14.Adjusting ring
15.Third-stage gear shaft
16.Key
17.Second-stage big gear
18.Shaft sleeve
19.Bearing
20.Adjusting ring
21.Circlip for hole
22.Seal cover
23.Oil mirror
24.Screw
25.Plug
26.Housing cover
27.Second-stage gear shaft
28.Key
29.Bearing
30.Circlip for hole
31.Bearing
32.First-stage big gear
33.Lock washer
34.Round nut
35.First-stage small gear
36.Breather plug
37.Housing
38.Front cover

MKA37 RATIO MATCH TABLE

Motor power range(KW)	Ratio	First stage-small gear	63 type	71 type	80 type	90 type	100 type	First stage-big gear	Second Stage + Third Stage gear
0.12-0.25	106.38	X1014	10					D0461014067	
0.12-0.25	97.81	X1015	10					D0461015066	
0.12-0.37	83.69	X1017	10	10				D0461017064	
0.12-0.37	72.54	X1019	10	10				D0461019062	
0.12-0.37	67.80	X1020	10	10				D0461020061	
0.12-0.37	58.60	X1022	10	10				D0461022058	A+C
0.12-0.55	49.79	X1025	10	10	12			D0461025056	
0.12-0.55	44.46	X1027	10	10	12			D0461027054	
0.12-0.75	37.97	X1224	10	10	12			D0461224041	
0.12-0.75	35.57	X1225	10	10	12			D0461225040	
0.12-0.75	29.96	X1523	10	10	12			D0461523031	
0.12-0.75	28.83	X1017	10	10	12			D0461017064	
0.12-1.1	24.99	X1019	10	10	12	14		D0461019062	
0.12-1.1	23.36	X1020	10	10	12	14		D0461020061	
0.12-1.1	20.19	X1022	10	10	12	14		D0461022058	B+C
0.12-1.5	17.15	X1025	10	10	12	14		D0461025056	
0.15-1.5	15.32	X1027	10	10	12	14		D0461027054	
0.12-1.5	13.08	X1224	10	10	12	14		D0461224041	
0.12-1.5	12.14	X1020	10	10	12	14		D0461020061	
0.18-2.2	10.49	X1022	10	10	12	14	16	D0461022058	
0.18-2.2	8.91	X1025	10	10	12	14	16	D0461025056	
0.18-3.0	7.96	X1027	10	10	12	14	16	D0461027054	B+D
0.25-3.0	6.80	X1224	10	10	12	14	16	D0461224041	
0.25-3.0	6.37	X1225	10	10	12	14	16	D0461225040	
0.37-3.0	5.36	X1523		10	12	14	16	D0461523031	

E X F Y G Z

Selection of instruction:

1. The basic gearboxes are 3 pcs: A+C, B+C and B+D.
E+X+A+C, collocate ratio from 29.96 to 106.38.
F+Y+B+C, collocate ratio from 13.08 to 28.83.
G+Z+B+D, collocate ratio from 5.36 to 12.14.

2. E.g: if you need to collocate ratio 23.36,you should choice B+C,
with first stage small gear E (X1020) and first stage big gear x(D0461020061).

3. Diameter of first stage-small gear depends on motor size.

MKA47 RATIO MATCH TABLE

Motor power range(KW)	Ratio	First stage-small gear	63 type	71 type	80 type	90 type	100 type	First stage-big gear	Second Stage + Third Stage gear
0.12-0.37	131.87	X1014	10	10				D0521014077	
0.12-0.37	121.48	X1015	10	10				D0521015076	
0.18-0.55	104.37	X1017	10	10	12			D0521017074	
0.18-0.55	90.86	X1019	10	10	12			D0521019072	
0.18-0.55	85.12	X1020	10	10	12			D0521020071	
0.37-0.75	75.20	X1022		10	12			D0521022069	
0.37-0.75	69.84	X1023		10	12			D0521023067	A+C
0.37-0.75	63.30	X1025		10	12			D0521025066	
0.55-1.1	56.83	X1027			12	14		D0521027064	
0.55-1.1	48.95	X1224			12	14		D0521224049	
0.55-1.1	46.04	X1225			12	14		D0521225048	
0.75-1.5	39.61	X1523			12	14		D0521523038	
0.75-1.5	35.39	X1721			12	14		D0521721031	
0.75-1.5	31.30	X1019			12	14		D0521019072	
1.1-1.5	29.32	X1020				14		D0521020071	
1.1-2.2	25.91	X1022				14	16	D0521022069	
1.1-2.2	24.06	X1023				14		D0521023067	
1.1-2.2	21.81	X1025				14	16	D0521025066	B+C
1.1-3.0	19.58	X1027				14	16	D0521027064	
1.5-3.0	16.86	X1224				14	16	D0521224049	
1.5-3.0	15.86	X1225				14	16	D0521225048	
1.5-3.0	13.65	X1523				14	16	D0521523038	
1.5-3.0	12.19	X1721				14	16	D0521721031	
1.5-3.0	11.77	X1025				14	16	D0521025066	
2.2-3.0	10.56	X1027					16	D0521027064	
2.2-3.0	9.10	X1224					16	D0521224049	
3.0	8.56	X1225					16	D0521225048	B+D
3.0	7.36	X1523					16	D0521523038	
3.0	6.58	X1721					16	D0521721031	
3.0	5.81	X1723					16	D0521723030	

Selection of instruction:

1. The basic gearboxes are 3 pcs: A+C, B+C and B+D.
E+X+A+C, collocate ratio from 35.39 to 131.87
F+Y+B+C, collocate ratio from 12.19 to 31.30.
G+Z+B+D, collocate ratio from 5.8 to 11.77.

2. E.g: if you need to collocate ratio 31.30,you should choice B+C,
with first stage small gear E (X1019) and first stage big gear x(D0521019072).

3. Diameter of first stage-small gear depends on motor size.

MKA67 RATIO MATCH TABLE

Motor power range(KW)	Ratio	First stage-small gear	63 type	71 type	80 type	90 type	100 type	112 type	132 type	First stage-big gear	Second Stage + Third Stage gear
0.18-0.37	144.79	X1015	10							D0601015091	A+C
0.18-0.75	123.54	X1017	10	10	12					D0601017088	
0.18-1.1	108.03	X1019	10	10	12	14				D0601019086	
0.25-1.1	102.62	X1020		10	12	14				D0601020086	
0.37-1.1	90.04	X1022		10	12	14				D0601022083	
0.37-1.5	76.37	X1025		10	12	14				D0601025080	
0.75-1.5	68.95	X1027			12	14				D0601027078	
0.75-1.5	60.66	X1224			12	14				D0601224061	
0.75-2.2	57.28	X1225			12	14	16			D0601225060	
1.1-2.2	48.77	X1523				14	16			D0601523047	
1.1-3.0	44.32	X1721				14	16			D0601721039	
1.5-3.0	38.39	X1723				14	16			D0601723037	
1.5-4.0	35.61	X1022				14	16			D0601022083	B+C
1.5-4.0	30.21	X1025				14	16	18		D0601025080	
1.5-4.0	27.27	X1027				14	16	18		D0601027078	
2.2-5.5	23.99	X1224					16	18	22	D0601224061	
2.2-5.5	22.66	X1225					16	18	22	D0601225060	
2.2-5.5	19.29	X1523					16	18	22	D0601523047	
2.2-5.5	17.53	X1721					16	18	22	D0601721039	
2.2-5.5	15.19	X1723					16	18	22	D0601723037	
2.2-5.5	13.22	X1725					16	18	22	D0601725035	
2.2-5.5	12.48	X1225					16	18	22	D0601225060	B+D
2.2-5.5	10.63	X1523					16	18	22	D0601523047	
2.2-5.5	9.66	X1721					16	18	22	D0601721039	
2.2-5.5	8.37	X1723					16	18	22	D0601723037	
2.2-5.5	7.28	X1725					16	18	22	D0601725035	

Selection of instruction:

1. The basic gearboxes = E+X+A+C, or F+Y+B+C, or G+Z+B+D (with extra input flange or other spare parts)
E+X+A+C, collocate ratio from 38.39 to 144.79.
F+Y+B+C, collocate ratio from 13.22 to 35.61.
G+Z+B+D, collocate ratio from 7.28 to 12.48.

2. E.g: if you need to collocate ratio 60.66,you should choice A+C,
with first stage small gear E(X1224) and first stage big gear X (D0601224061)

3. Diameter of first stage-small gear depends on motor size.

MKA77 RATIO MATCH TABLE

Motor power range(KW)	Ratio	First stage-small gear	71 type	80 type	90 type	100 type	112 type	132 type	160 type	First stage-big gear	Second Stage + Third Stage gear
0.37	192.18	X1014	10							D0721014112	
0.37	179.36	X1015	10							D0721015112	
0.37-0.75	154.02	X1017	10	12						D0721017109	
0.55-1.5	135.28	X1019		12	14					D0721019107	
0.55-1.5	128.52	X1020		12	14					D0721020107	
0.55-1.5	113.56	X1022		12	14					D0721022104	
0.55-2.2	97.05	X1025		12	14	16				D0721025101	
1.1-2.2	88.97	X1027			14	16				D0721027100	A+C
1.1-3.0	78.07	X1224			14	16				D0721224078	
1.1-3.0	73.99	X1225			14	16				D0721225077	
1.5-3.0	64.76	X1523			14	16				D0721523062	
1.5-4.0	58.34	X1721			14	16	18			D0721721051	
1.5-4.0	51.18	X1723			14	16	18			D0721723049	
1.5-5.5	45.16	X1725			14	16	18	22		D0721725047	
1.5-5.5	40.04	X1727			14	16	18	22		D0721727045	
2.2-4	38.39	X1025				16	18			D0721025101	
2.2-4.0	35.19	X1027				16	18			D0721027100	
2.2-7.5	30.88	X1224				16	18	22		D0721224078	
2.2-7.5	29.26	X1225				16	18	22		D0721225077	
2.2-7.5	25.61	X1523				16	18	22		D0721523062	B+C
4-7.5	23.08	X1721					18	22		D0721721051	
4-11	20.24	X1723					18	22	28	D0721723049	
5.5-11	17.86	X1725						22	28	D0721725047	
5.5-11	15.84	X1727						22	28	D0721727045	
5.5-11	13.52	X2026						22	28	D0722026037	
5.5-11	12.33	X1721						22	28	D0721721051	
7.5-11	10.81	X1723						22	28	D0721723049	
7.5-11	9.54	X1725						22	28	D0721725047	B+D
7.5-11	8.46	X1727						22	28	D0721727045	
7.5-11	7.22	X2026						22	28	D0722026037	

Selection of instruction:

1. The basic gearboxes = E+X+A+C, or F+Y+B+C, or G+Z+B+D (with extra input flange or other spare parts)
E+X+A+C, collocate ratio from 40.04 to 192.18.
F+Y+B+C, collocate ratio from 13.52 to 38.39
G+Z+B+D, collocate ratio from7.22 to 12.33

2. E.g: if you need to collocate ratio 58.34,you should choice A+C,
with first stage small gear E (X1721) and first stage big gear x(D0721721051).

3. Diameter of first stage-small gear depends on motor size.

MKA87 RATIO MATCH TABLE

Motor power range(KW)	Ratio	First stage-small gear	80 type	90 type	100 type	112 type	132 type	160 type	180 type	First stage-big gear	Second Stage + Third Stage gear
0.75	197.37	X1017	12							D0931017147	
0.75-1.5	174.19	X1019	12	14						D0931019145	
0.75-1.5	164.34	X1020	12	14						D0931020144	
0.75-2.5	147.33	X1022	12	14	16					D0931022142	
1.1-3	126.91	X1025		14	16					D0931025139	
1.1-3	115.82	X1027		14	16					D0931027137	
1.5-4	102.71	X1224		14	16	18				D0931224108	
1.5-4	86.34	X1523		14	16	18				D0931523087	A+C
2.2-5.5	79.34	X1721			16	18	22			D0931721073	
2.2-5.5	70.46	X1723			16	18	22			D0931723071	
2.2-5.5	63.00	X1725			16	18	22			D0931725069	
3-7.5	56.64	X1727			16	18	22			D0931727067	
3-7.5	49.16	X2026			16	18	22			D0932026056	
3-7.5	44.02	X2028			16	18	22			D0932028054	
3.0-11	36.52	X2525			16	18	22	28		D0932525040	
5.5-11	31.38	X1721					22	28		D0931721073	
5.5-15	27.87	X1723					22	28		D0931723071	
7.5-15	24.92	X1725					22	28		D0931725069	
7.5-15	22.40	X1727					22	28		D0931727067	B+C
7.5-18.5	19.45	X2026					22	28	32	D0932026056	
7.5-18.5	17.41	X2028					22	28	32	D0932028054	
7.5-18.5	14.44	X2525					22	28	32	D0932525040	
7.5-22	12.56	X3023					22	28	32	D0933023032	
11.0-22	16.00	X1723						28		D0931723071	
11.0-22	11.16	X2026						28	32	D0932026056	
11.0-22	10.00	X2028						28	32	D0932028054	B+D
11.0-22	8.29	X2525						28	32	D0932525040	
11.0-22	7.21	X3023						28	32	D0933023032	

Selection of instruction:

1. The basic gearboxes = E+X+A+C, or F+Y+B+C, or G+Z+B+D (with extra input flange or other spare parts)
E+X+A+C, collocate ratio from 36.52 to 197.37.
F+Y+B+C, collocate ratio from 12.56 to 31.38.
G+Z+B+D, collocate ratio from 7.21 to 16.00.

2. E.g: if you need to collocate ratio 86.34,you should choice A+C,
with first stage small gear E(X1523) and first stage big gear X (D0931523087)

3.Diameter of first stage-small gear depends on motor size.

MKA97 RATIO MATCH TABLE

Motor power range(KW)	Ratio	First stage-small gear	90 type	100 type	112 type	132 type	160 type	180 type	200 type	First stage-big gear	Second Stage + Third Stage gear
1.1-3.0	176.05	X1022	14	16						D1161022181	
1.1-4	153.21	X1025	14	16	18					D1161025179	
1.1-4	140.28	X1027	14	16	18					D1161027177	
1.5-5.5	123.93	X1224	14	16	18	22				D1161224139	
2.2-5.5	105.13	X1523		16	18	22				D1161523113	
2.2-5.5	96.80	X1721		16	18	22				D1161721095	
3-7.5	86.52	X1723		16	18	22				D1161723093	A+C
3-7.5	77.89	X1725		16	18	22				D1161725091	
3-7.5	70.54	X1727		16	18	22				D1161727089	
3-11	62.55	X2026		16	18	22	28			D1162026076	
3-11	56.55	X2028		16	18	22	28			D1162028074	
5.5-11	47.93	X2525				22	28			D1162525056	
7.5-15	41.87	X3023				22	28			D1163023045	
7.5-15	38.29	X1721				22	28			D1161721095	
7.5-15	34.22	X1723				22	28			D1161723093	
11-22	30.81	X1725					28	32		D1161725091	
11-22	27.90	X1727					28	32		D1161727089	
11-22	24.74	X2026					28	32		D1162026076	B+C
11-30	22.37	X2028					28	32	38	D1162028074	
15-30	18.96	X2525					28	32	38	D1162525056	
15-30	16.56	X3023					28	32	38	D1163023045	
18.5-30	13.85	X3522						32	38	D1163522036	
18.5-30	11.99	X3524						32	38	D1163524034	
22-30	10.41	X3023						32	38	D1163023045	B+D
22-30	8.71	X3522						32	38	D1163522036	

Selection of instruction:

1. The basic gearboxes are 3 pcs : A+C, B+C, and B+D
E+X+A+C, collocate ratio from 41.87 to 176.05.
F+Y+B+C, collocate ratio from 11.99 to 38.29
G+Z+B+D, collocate ratio from 8.71 to 10.41

2. E.g: if you need to collocate ratio 38.29,you should choice B+C,
with first stage small gear E (X1721) and first stage big gear x(D1161721095).

3.Diameter of first stage-small gear depends on motor size.

MKA107 RATIO MATCH TABLE

Motor power range(KW)	Ratio	First stage-small gear	100 type	112 type	132 type	160 type	180 type	200 type	225 type	First stage-big gear	Second Stage + Third Stage gear
2.2-7.5	143.47	X1224	16	18	22					D1301224159	
2.2-7.5	121.46	X1523	16	18	22					D1301523129	
2.2-15	112.41	X1721	16	18	22	28				D1301721109	
2.2-15	100.75	X1723	16	18	22	28				D1301723107	
2.2-22	90.96	X1723	16	18	22	28				D1301725105	
2.2-22	82.61	X1727	16	18	22	28				D1301727103	
2.2-45	73.30	X2026	16	18	22	28				D1302026088	A+C
2.2-45	66.52	X2028	16		22	28	32			D1302028086	
2.2-45	57.17	X2525	16		22	28	32			D1302525066	
5.5-45	49.90	X3023			22	28	32			D1303023053	
5.5-45	42.33	X3522			22	28	32			D1303522043	
5.5-45	37.00	X3524			22	28	32	38		D1303524041	
7.5-45	31.28	X3527				28	32	38		D1303527039	
5.5-22	32.68	X1727				28	32			D1301727103	
2.2-45	29.00	X2026				28	32	38	38	D1302026088	
2.2-45	26.32	X2028					32	38	38	D1302028086	
2.2-45	22.62	X2525					32	38	38	D1302525066	B+C
5.5-45	19.74	X3023					32	38	38	D1303023053	
5.5-45	16.75	X3522					32	38	38	D1303522043	
5.5-45	14.63	X3524					32	38	38	D1303524041	
5.5-45	13.43	X2525					32	38	38	D1302525066	
5.5-45	11.73	X3023					32	38	38	D1303023053	B+D
5.5-45	9.94	X3522					32	38	38	D1303522043	
5.5-45	8.69	X3524						38	38	D1303524041	

E X F Y G Z

Selection of instruction:

1. The basic gearboxes are 2 pcs : A+C, B+C, B+D
E+X+A+C, collocate ratio from 31.28 to 143.47
F+Y+B+C, collocate ratio from 14.63 to 32.68
G+Z+B+D, collocate ratio from 8.69 to 13.43

2. E.g: if you need to collocate ratio 32.68, you should choice B+C,
with first stage small gear E(X1727) and first stage big gear X (D1301727103)

3.Diameter of first stage-small gear depends on motor size.

MKA127 RATIO MATCH TABLE

Motor power range(KW)	Ratio	First stage-small gear	132 type	160 type	180 type	200 type	225 type	250 type	280 type	First stage-big gear	Second Stage + Third Stage gear
7.5	146.30	X1523	22							D1571523161	
7.5-15	136.35	X1721	22	28						D1571721137	
7.5-15	122.67	X1723	22	28						D1571723135	
7.5-18.5	110.35	X1725	22	28	32					D1571725132	
7.5-22	90.03	X2026	22	28	32					D1572026112	
7.5-22	82.11	X2028	22	28	32					D1572028110	A+C
7.5-30	71.06	X2525	22	28	32	38				D1572525085	
15-30	62.70	X3023		28	32	38				D1573023069	
15-37	54.15	X3522		28	32	38	38			D1573522057	
15-45	47.90	X3524		28	32	38	38			D1573524055	
18.5-45	40.25	X3527			32	38	38			D1573527052	
18.5-45	36.30	X2028			32	38	38			D1572028110	
18.5-55	31.41	X2525			32	38	38	48		D1572525085	
18.5-75	27.72	X3023			32	38	38	48	48	D1573023069	
22-90	23.94	X3522			32	38	38	48	48	D1573522057	B+C
22-90	21.17	X3524			32	38	38	48	48	D1573524055	
37-90	17.79	X3527					38	48	48	D1573527052	
37-90	14.37	X4027					38	48	48	D1574027042	
37-90	12.78	X3524					38	48	48	D1573524055	
37-90	10.74	X3527					38	48	48	D1573527052	B+D
37-90	8.68	X4027					38	48	48	D1574027042	

E X F Y G Z

Selection of instruction:

1. The basic gearboxes are 3 pcs: A+C, B+C ,B+D
E+X+A+C, collocate ratio from 40.25 to 146.3
F+Y+B+C, collocate ratio from 14.37 to 36.3
G+Z+B+D, collocate ratio from 8.68 to 12.78

2. E.g: if you need to collocate ratio 40.25, you should choice A+C,
with first stage small gear E(X3527) and first stage big gear X (D1573527052);

3.Diameter of first stage-small gear depends on motor size.

Output speed (r/min)	Output torque (N.M)	Ratio (i)	Service Factor (fs)	Type	Motor Pole
0.12KW					
0.08	11800	17550	1.10		
0.09	10700	16006	1.20		
0.09	9880	14975	1.30	MK127 MR77	
0.11	8010	12440	1.60	MKF127 MR77	
0.13	6920	10915	1.90	MKA127 MR77	4P
0.14	6320	9819	2.1	MKAF127MR77	
0.16	5220	8443	2.5		
0.18	4820	7482	2.7		
0.10	9590	14311	0.85		
0.11	8060	12211	1.00		
0.13	6930	10677	1.15		
0.14	6280	9524	1.25	MK107 MR77	
0.17	5410	8328	1.50	MKF107 MR77	
0.19	4720	7270	1.70	MKA107 MR77	4P
0.22	3760	6184	2.1	MKAF107 MR77	
0.24	3320	5662	2.4		
0.27	3020	5138	2.7		
0.32	2700	4359	3.0		
0.17	5310	8054	0.80		
0.20	4350	6970	1.00		
0.23	3890	6027	1.10		
0.26	3560	5391	1.20		
0.30	2950	4669	1.45		
0.34	2640	4082	1.65		
0.39	2320	3583	1.85		
0.44	2040	3108	2.1	WK97 MR57	
0.50	1720	2757	2.5	MKF97 MR57	
0.57	1580	2419	2.7	MKA97 MR57	4P
0.65	1370	2123	3.2	MKAF97MR57	
0.74	1220	1856	3.5		
0.85	1000	1625	4.3		
0.96	860	1430	5.0		
1.1	830	1261	5.2		
1.2	725	1102	5.9		
0.26	3380	5240	0.80		
0.30	2850	4562	0.95		
0.34	2610	4037	1.05		
0.38	2330	3609	1.15		
0.44	1990	3107	1.35		
0.51	1700	2728	1.60		
0.58	1500	2371	1.80	WK87 MR57	
0.66	1380	2088	1.95	MKF87 MR57	
0.74	1220	1854	2.2	MKA87 MR57	4P
0.83	1090	1657	2.5	MKAF87MR57	
0.97	930	1415	2.9		
1.1	800	1229	3.4		
1.3	695	1078	3.9		
1.5	585	951	4.6		
1.6	505	837	5.4		
1.9	435	726	6.2		
0.51	1790	2717	0.85		
0.58	1510	2370	1.05		
0.67	1380	2050	1.10		
0.78	1180	1772	1.30	MK77 MR37	
0.91	1010	1514	1.55	MKF77 MR37	
0.99	920	1388	1.70	MKA77 MR37	4P
1.1	810	1218	1.90	MKAF77MR37	
1.3	710	1053	2.2		
1.5	620	924	2.5		
1.7	550	815	2.8		
2.0	440	709	3.5		
2.2	385	622	4.0		

Output speed (r/min)	Output torque (N.M)	Ratio (i)	Service Factor (fs)	Type	Motor Pole
0.12KW					
1.0	930	1351	0.90		
1.2	795	1171	1.05		
1.3	695	1034	1.20		
1.5	585	903	1.40		
1.7	545	793	1.50	MK67 MR37	
2.0	440	697	1.85	MKF67 MR37	4P
2.2	390	613	2.1	MKA67 MR37	
2.5	340	542	2.4	MKAF67MR37	
2.9	315	471	2.6		
3.3	265	420	3.1		
3.8	235	361	3.5		
4.3	210	323	3.9		
4.9	176	279	4.7		
5.6	155	246	5.3		
6.3	134	217	6.1		
2.2	430	639	0.95		
2.5	370	552	1.10	MK47 MR37	
2.8	315	495	1.25	MKF47 MR37	4P
3.2	280	426	1.45	MKA47 MR37	
3.7	235	375	1.70	MKAF47MR37	
4.2	215	327	1.85		
4.8	189	289	2.1		
6.2	184	144.79	4.4	MK 67 MKF 67 MKA 67 MKAF67	6P
6.8	168	131.87	2.4	MK 47	
7.4	155	121.48	2.6	MKF 47	6P
8.6	133	104.37	3.0	MKA 47 MKAF47	
10	110	131.87	3.7	MK 47 MKF 47	4P
11	101	121.48	4.0	MKA 47 MKAF47	
8.5	136	106.38	1.50	MK 37	
9.2	125	97.81	1.60	MKF 37	6P
11	107	83.69	1.90	MKA 37	
12	92	72.54	2.2	MKAF37	
13	88	106.38	2.3		
14	81	97.81	2.5		
16	70	83.69	2.9		
19	60	72.54	3.3		
20	56	67.80	3.5		
24	49	58.60	4.1		
28	41	49.79	4.8		
31	37	44.46	5.4	MK 37	
36	32	37.97	6.3	MKF 37	4P
39	30	35.57	6.8	MKA 37	
46	25	29.96	8.0	MKAF37	
48	24	28.83	8.4		
55	21	24.99	9.6		
59	19	23.36	10		
68	17	20.19	11		
80	14	17.15	13		
90	13	15.32	14		
105	11	13.08	15		
114	10	12.14	16		

Output speed (r/min)	Output torque (N.M)	Ratio (i)	Service Factor (fs)	Type	Motor Pole
0.12KW					
0.16	8990	8328	0.90	MK107 MR77 MKF107 MR77 MKA107 MR77 MKAF107 MR77	4P
0.18	7850	7270	1.00		
0.21	6420	6184	1.25		
0.23	5760	5662	1.40		
0.26	5230	5138	1.55		
0.30	4570	4359	1.75		
0.35	4000	3810	2.0		
0.39	3440	3358	2.3		
0.44	3090	2977	2.6		
0.51	2700	2599	3.0		
0.58	2340	2286	3.4		
0.18KW					
0.09	16300	14975	0.80	MK127 MR77 MKF127 MR77 MKA127 MR77 MKAF127MR77	4P
0.11	13400	12440	0.95		
0.12	11600	10915	1.10		
0.13	10500	9819	1.25		
0.16	8850	8443	1.45		
0.18	8040	7482	1.60		
0.20	6990	6565	1.85		
0.23	5940	5804	2.2		
0.26	5220	5027	2.5		
0.30	4530	4423	2.9		
0.34	3960	3889	3.3		
0.40	3310	3311	3.9		
0.16	8990	8328	0.90	MK107 MR77 MKF107 MR77 MKA107 MR77 MKAF107 MR77	4P
0.18	7850	7270	1.00		
0.21	6420	6184	1.25		
0.23	5760	5662	1.40		
0.26	5230	5138	1.55		
0.30	4570	4359	1.75		
0.35	4000	3810	2.0		
0.39	3440	3358	2.3		
0.44	3090	2977	2.6		
0.51	2700	2599	3.0		
0.58	2340	2286	3.4		
0.28	4960	4669	0.85	MK97 MR57 MKF97 MR57 MKA97 MR57 MKAF97 MR57	4P
0.32	4390	4082	1.00		
0.37	3860	3583	1.10		
0.42	3370	3108	1.25		
0.48	2910	2757	1.50		
0.55	2640	2419	1.65		
0.62	2290	2123	1.90		
0.71	2030	1856	2.1		
0.81	1710	1625	2.5		
0.92	1490	1430	2.9		
1.0	1380	1261	3.1		
1.2	1210	1102	3.6		
1.4	1040	957	4.1		
1.5	930	855	4.6		
1.8	755	743	5.7		
2.0	675	652	6.4		
0.42	3330	3107	0.80	MK87 MR57 MKF87 MR57 MKA87 MR57 MKAF87 MR57	4P
0.48	2880	2728	0.95		
0.56	2520	2371	1.05		
0.63	2290	2088	1.20		
0.71	2030	1854	1.35		
0.80	1820	1657	1.50		
0.93	1540	1415	1.75		
1.1	1340	1229	2.0		
1.2	1160	1078	2.3		
1.4	1000	951	2.7		
1.6	870	837	3.1		
1.8	755	726	3.6		

Output speed (r/min)	Output torque (N.M)	Ratio (i)	Service Factor (fs)	Type	Motor Pole
0.18KW					
0.87	1670	1514	0.95	MK77 MR37 MKF77 MR37 MKA77 MR37 MKAF77 MR37	4P
0.95	1530	1388	1.00		
1.1	1340	1218	1.15		
1.2	1170	1053	1.35		
1.4	1030	924	1.50		
1.6	910	815	1.70		
1.9	750	709	2.1		
2.1	655	622	2.4		
2.4	590	552	2.6		
2.7	515	485	3.0		
3.1	455	428	3.4		
3.6	400	367	3.9		
1.5	980	903	0.85	MK67 MR37 MKF67 MR37 MKA67 MR37 MKAF67 MR37	4P
1.7	890	793	0.90		
1.9	745	697	1.10		
2.2	655	613	1.25		
2.4	580	542	1.40		
2.8	520	471	1.60		
3.2	445	420	1.85		
3.7	395	361	2.1		
4.1	350	323	2.3		
4.7	295	279	2.8		
3.5	400	375	1.00	MK47 MR37 MKF47 MR37 MKA47 MR37 MKAF47 MR37	4P
4.0	360	327	1.10		
4.6	315	289	1.25		
5.2	275	256	1.45		
5.9	245	225	1.65		
6.7	210	198	1.90		
7.7	183	171	2.2		
8.6	164	153	2.4		
10	142	131	2.8		
6.0	285	144.79	2.9	MK 67 MKF 67 MKA 67 MKAF 67	6P
7.0	145	123.54	3.4		
8.1	215	108.03	3.8		
8.5	205	102.62	4.0		
9.1	189	144.79	4.3	MK 67 MKF 67 MKA 67 MKAF 67	4P
11	161	123.54	5.1		
12	141	108.03	5.8		
6.6	260	131.87	1.55	MK 47 MKF 47 MKA 47 MKAF 47	6P
7.2	240	121.48	1.65		
8.3	205	104.37	1.95		
9.6	180	90.86	2.2		
10	168	85.12	2.4		
10	172	131.87	2.3	MK 47 MKF 47 MKA 47 MKAF 47	4P
11	158	121.48	2.5		
13	136	104.37	2.9		
15	118	90.86	3.4		
16	111	85.12	3.6		
8.2	210	106.38	0.95	MK 37 MKF 37 MKA 37 MKAF 37	6P
8.9	193	97.81	1.05		
10	165	83.69	1.20		
12	143	72.54	1.40		

Output speed (r/min)	Output torque (N.M)	Ratio (i)	Service Factor (fs)	Type	Motor Pole
0.18KW					
12	139	106.38	1.45		
14	127	97.81	1.55		
16	109	83.69	1.85		
18	95	72.54	2.1		
19	88	67.80	2.3		
23	76	58.60	2.6		
27	65	49.79	3.1		
30	58	44.46	3.5		
35	49	37.97	4.1		
37	46	35.57	4.3		
44	39	29.96	5.1	MK 37	
46	38	28.83	5.3	MKF 37	4P
53	33	24.99	6.2	MKA 37	
57	30	23.36	6.4	MKAF 37	
65	26	20.19	7.0		
77	22	17.15	8.1		
86	20	15.31	8.8		
101	17	13.08	9.7		
109	16	12.14	10		
126	14	10.49	12		
148	12	8.91	14		
166	10	7.96	15		
0.25KW					
0.13	15300	9819	0.85		
0.15	13000	8443	1.00		
0.17	11700	7482	1.10	MK127 MR77	
0.20	10200	6565	1.30	MKF127 MR77	4P
0.22	8770	5804	1.50	MKA127 MR77	
0.26	7670	5027	1.70	MKAF127 MR77	
0.29	6680	4423	1.95		
0.33	5850	3889	2.2		
0.39	4930	3311	2.6		
0.21	9440	6184	0.85		
0.23	8520	5662	0.95		
0.25	7730	5138	1.05		
0.30	6700	4359	1.20		
0.34	5850	3810	1.35	MK107 MR77	
0.39	5070	3358	1.60	MKF107 MR77	4P
0.44	4540	2977	1.75	MKA107 MR77	
0.50	3970	2599	2.0	MKAF107 MR77	
0.57	3450	2286	2.3		
0.67	2930	1939	2.7		
0.76	2640	1713	3.0		
0.84	2390	1554	3.3		
0.97	2060	1336	3.9		
0.42	4890	3108	0.90		
0.47	4250	2757	1.00		
0.54	3840	2419	1.10		
0.61	3340	2123	1.30	MK97 MR57	
0.70	2950	1856	1.45	MKF97 MR57	4P
0.80	2520	1625	1.70	MKA97 MR57	
0.91	2190	1430	1.95	MKAF97 MR57	
1.0	2010	1261	2.1		
1.2	1750	1102	2.5		
1.4	1520	957	2.8		
1.5	1360	855	3.2		
0.62	3320	2088	0.80		
0.70	2950	1854	0.90		
0.78	2640	1657	1.00		
0.92	2250	1415	1.20	MK87 MR57	
1.1	1950	1229	1.40	MKF87 MR57	
1.2	1700	1078	1.60	MKA87 MR57	4P
1.4	1470	951	1.85	MKAF87MR57	
1.5	1280	837	2.1		
1.8	1110	726	2.4		
2.0	990	638	2.7		

Output speed (r/min)	Output torque (N.M)	Ratio (i)	Service Factor (fs)	Type	Motor Pole
0.25KW					
1.2	1690	1053	0.90		
1.4	1480	924	1.05		
1.6	1310	815	1.20		
1.8	1100	709	1.40		
2.1	960	622	1.60		
2.3	860	552	1.80		
2.7	755	485	2.0	MK77 MR37	
3.0	665	428	2.3	MKF77 MR37	4P
3.5	580	367	2.7	MKA77 MR37	
4.0	515	328	3.0	MKAF77 MR37	
4.5	460	290	3.4		
5.2	395	252	3.9		
5.9	345	221	4.5		
6.7	305	195	5.1		
7.4	270	175	5.7		
2.1	960	613	0.85		
2.4	850	542	0.95		
2.8	755	471	1.10		
3.1	655	420	1.25	MK67 MR37	
3.6	575	361	1.45	MKF67 MR37	4P
4.0	510	323	1.60	MKA67 MR37	
4.7	430	279	1.90	MKAF67 MR37	
5.3	385	246	2.1		
6.0	335	217	2.4		
4.4	540	154.02	2.9		
5.0	475	135.28	3.3	MK 77	
5.3	450	128.52	3.4	MKF 77	8P
6.0	400	113.56	3.9	MKA 77	
				MKAF 77	
4.6	520	192.18	2.8		
4.9	485	179.37	3.0	MK 77	
5.7	420	154.02	3.7	MKF 77	6P
6.5	365	135.28	4.2	MKA 77	
				MKAF 77	
5.5	435	123.54	1.90		
6.3	380	108.03	2.2	MK 67	
6.6	360	102.62	2.3	MKF 67	8P
7.6	315	90.04	2.6	MKA 67	
				MKAF 67	
6.1	395	144.79	2.1		
7.1	335	123.54	2.5	MK 67	
8.1	295	108.03	2.8	MKF 67	6P
8.6	280	102.62	3.0	MKA 67	
				MKAF 67	
9.0	265	144.79	3.1		
11	225	123.54	3.6	MK 67	
12	198	108.03	4.1	MKF 67	4P
13	189	102.62	4.3	MKA 67	
				MKAF 67	
6.7	360	131.87	1.10		
7.2	330	121.48	1.20	MK 47	
8.4	285	104.37	1.40	MKF 47	6P
9.7	245	90.86	1.60	MKA 47	
10	230	85.12	1.75	MKAF 47	
9.9	240	131.87	1.65		
11	225	121.48	1.80	MK 47	
12	192	104.37	2.1	MKF 47	4P
14	167	90.86	2.4	MKA 47	
15	156	85.12	2.6	MKAF 47	

Output speed (r/min)	Output torque (N.M)	Ratio (i)	Service Factor (fs)	Type	Motor Pole
0.18KW					
11	225	83.69	0.90	MK 37 MKF 37 MKA 37 MKAF 37	6P
12	197	72.54	1.00		
13	184	67.80	1.10		
15	159	58.60	1.25		
18	135	49.79	1.50		
12	195	106.38	1.00	MK 37 MKF 37 MKA 37 MKAF 37	4P
13	180	97.81	1.10		
16	154	83.69	1.30		
18	133	72.54	1.50		
19	125	67.80	1.60		
22	108	58.60	1.85		
26	91	49.79	2.2		
29	82	44.46	2.5		
34	70	37.97	2.9		
37	65	35.57	3.1		
43	55	29.96	3.6		
45	53	28.83	3.8		
52	46	24.99	4.4		
56	43	23.36	4.6		
64	37	20.19	5.0		
76	32	17.15	5.7		
85	28	15.32	6.2		
99	24	13.08	6.9		
107	22	12.14	7.2		
124	19	10.49	8.3		
146	16	8.91	9.8		
163	15	7.96	11		
191	13	6.80	12		
204	12	6.37	12		
0.37KW					
0.18	16600	7482	0.80	MK127 MR77 MKF127 MR77 MKA127 MR77 MKAF127 MR77	4P
0.21	14500	6565	0.90		
0.24	12600	5804	1.05		
0.27	11000	5027	1.20		
0.31	9610	4423	1.35		
0.35	8430	3889	1.55		
0.42	7120	3311	1.85		
0.72	4230	1926	3.1		
0.79	3860	1757	3.4		
0.90	3360	1541	3.9		
0.36	8380	3810	0.95	MK107 MR77 MKF107 MR77 MKA107 MR77 MKAF107 MR77	4P
0.41	7300	3358	1.10		
0.46	6510	2977	1.25		
0.53	5690	2599	1.40		
0.60	4970	2286	1.60		
0.71	4210	1939	1.90		
0.81	3790	1713	2.1		
0.89	3440	1554	2.3		
1.0	2950	1336	2.7		
1.2	2580	1166	3.1		

Output speed (r/min)	Output torque (N.M)	Ratio (i)	Service Factor (fs)	Type	Motor Pole
0.37KW					
0.65	4770	2123	0.90	MK97 MR57 MKF97 MR57 MKA97 MR57 MKAF97 MR57	4P
0.74	4200	1856	1.00		
0.85	3610	1625	1.20		
0.96	3160	1430	1.35		
1.1	2850	1261	1.50		
1.2	2490	1102	1.70		
1.4	2160	957	2.0		
1.6	1930	855	2.2		
1.9	1620	743	2.7		
2.1	1430	652	3.0		
2.4	1280	573	3.4		
0.97	3200	1415	0.85	MK87 MR57 MKF87 MR57 MKA87 MR57 MKAF87MR57	4P
1.1	2770	1229	0.95		
1.3	2420	1078	1.10		
1.5	2110	951	1.30		
1.6	1850	837	1.45		
1.9	1600	726	1.70		
2.2	1420	638	1.90		
2.5	1240	562	2.2		
2.9	1040	474	2.6		
3.2	940	426	2.9		
3.7	810	373	3.3		
1.7	1860	815	0.85	MK77 MR37 MKF77 MR37 MKA77 MR37 MKAF77 MR37	4P
2.0	1580	709	1.00		
2.2	1380	622	1.10		
2.5	1230	552	1.25		
2.8	1080	485	1.45		
3.2	950	428	1.60		
3.8	830	367	1.85		
4.2	735	328	2.1		
4.8	655	290	2.4		
5.5	565	252	2.8		
6.2	495	221	3.1		
7.1	435	195	3.5		
7.9	390	175	4.0		
9.0	340	154	4.5		
3.3	940	420	0.90	MK67 MR37 MKF67 MR37 MKA67 MR37 MKAF67 MR37	4P
3.8	820	361	1.00		
4.3	725	323	1.15		
4.9	625	279	1.30		
5.6	550	246	1.50		
6.3	485	217	1.70		
7.2	430	191	1.90		
8.3	370	166	2.2		
9.6	320	144	2.5		
11	275	122	3.0		
3.9	910	174.19	3.0	MK 87 MKF 87 MKA 87 MKAF 87	8P
4.1	850	164.34	3.2		
4.6	765	147.33	3.5		
4.6	775	197.37	3.5	MK 87 MKF 87 MKA 87 MKAF 87	6P
5.2	685	174.19	4.0		
5.0	705	135.28	2.2	MK 77 MKF 77 MKA 77 MKAF 77	8P
5.3	670	128.52	2.3		
6.0	590	113.56	2.6		
7.0	505	97.05	3.1		

Output speed (r/min)	Output torque (N.M)	Ratio (i)	Service Factor (fs)	Type	Motor Pole
0.37KW					
5.8	605	154.02	2.6	MK 77	6P
6.7	530	135.28	2.9	MKF 77	
7.0	505	128.52	3.1	MKA 77	
7.9	445	113.56	3.5	MKAF 77	
7.2	490	192.18	3.0	MK 77	4P
7.7	460	179.37	3.2	MKF 77	
9.0	395	154.02	3.9	MKA 77	
				MKAF 77	
6.3	560	108.03	1.45	MK 67	8P
6.6	535	102.32	1.55	MKF 67	
7.6	470	90.04	1.75	MKA 67	
				MKAF 67	
7.3	485	123.54	1.70	MK 67	6P
8.3	425	108.03	1.95	MKF 67	
8.8	405	102.62	2.0	MKA 67	
10	355	90.04	2.3	MKAF 67	
9.5	370	144.79	2.2	MK 67	4P
11	315	123.54	2.6	MKF 67	
13	275	108.03	3.0	MKA 67	
15	230	90.04	3.6	MKAF 67	
18	196	76.37	4.2		
8.6	410	104.37	1.00	MK 47	6P
9.9	355	90.86	1.10	MKF 47	
11	335	85.12	1.20	MKA 47	
12	295	75.20	1.35	MKAF 47	
10	340	131.87	1.20	MK 47	4P
11	310	121.48	1.30	MKF 47	
13	265	104.37	1.50	MKA 47	
15	235	90.86	1.70	MKAF 47	
16	220	85.12	1.85		
18	193	75.20	2.1		
20	179	69.84	2.2		
22	162	63.30	2.5		
14	250	97.81	0.80	MK 37	4P
16	215	83.69	0.95	MKF 37	
19	186	72.54	1.10	MKA 37	
20	174	67.80	1.15	MKAF 37	
24	150	58.60	1.35		
28	128	49.79	1.55		
31	114	44.46	1.75		
36	97	37.97	2.1		
39	91	35.57	2.2		
46	77	29.96	2.6		
48	74	28.83	2.7		
55	64	24.99	3.1		
59	60	23.36	3.3		
68	52	20.19	3.6		
80	44	17.15	4.1		
90	39	15.32	4.5		
105	34	13.08	4.9		
114	31	12.14	5.1		
132	27	10.49	5.9		
155	23	8.91	7.0		
173	20	7.96	7.6		
203	17	6.80	8.6		
217	16	6.37	8.9		
257	14	5.36	10		

Output speed (r/min)	Output torque (N.M)	Ratio (i)	Service Factor (fs)	Type	Motor Pole
0.55KW					
0.31	14900	4423	0.85	MK127 MR77	4P
0.35	13000	3889	1.00	MKF127 MR77	
0.41	11100	3311	1.20	MKA127 MR77	
0.45	10000	3009	1.30	MKAF127 MR77	
0.52	8630	2607	1.50		
0.71	6560	1926	2.0		
0.77	5980	1757	2.2		
0.88	5220	1541	2.5		
1.0	4570	1342	2.8		
1.2	3990	1177	3.3		
1.3	3490	1025	3.7		
0.46	10100	2977	0.80	MK107 MR77	4P
0.52	8770	2599	0.90	MKF107 MR77	
0.59	7690	2286	1.05	MKA107 MR77	
0.70	6520	1939	1.25	MKAF107 MR77	
0.79	5850	1713	1.35		
0.87	5310	1554	1.50		
1.0	4570	1336	1.75		
1.2	3990	1166	2.0		
1.3	3450	1030	2.3		
1.5	3000	904	2.7		
1.7	2700	793	3.0		
2.0	2360	696	3.4		
2.2	2050	615	3.9		
0.95	4880	1430	0.90	MK97 MR57	4P
1.1	4380	1261	1.00	MKF97 MR57	
1.2	3820	1102	1.15	MKA97 MR57	
1.4	3320	957	1.30	MKAF97 MR57	
1.6	2960	855	1.45		
1.8	2520	743	1.70		
2.1	2220	652	1.95		
2.4	1970	573	2.2		
2.7	1700	504	2.5		
3.1	1470	437	2.9		
3.6	1300	382	3.3		
4.5	1040	305	4.1		
1.4	3260	951	0.85	MK87 MR57	4P
1.6	2860	837	0.95	MKF87 MR57	
1.9	2480	726	1.10	MKA87 MR57	
2.1	2190	638	1.25	MKAF87MR57	
2.4	1920	562	1.40		
2.9	1620	474	1.65		
3.2	1450	426	1.85		
3.7	1260	373	2.1		
4.1	1110	330	2.4		
4.6	990	294	2.7		
5.4	850	250	3.2		
5.8	800	236	3.4		
6.8	680	201	4.0		
2.5	1900	552	0.80	MK77 MR37	4P
2.8	1670	485	0.95	MKF77 MR37	
3.2	1470	428	1.05	MKA77 MR37	
3.7	1270	367	1.20	MKAF77 MR37	
4.2	1130	328	1.35		
4.7	1000	290	1.55		
5.4	870	252	1.80		
6.2	760	221	2.0		
7.0	670	195	2.3		
7.8	600	175	2.6		
8.8	530	154	2.9		

Output speed (r/min)	Output torque (N.M)	Ratio (i)	Service Factor (fs)	Type	Motor Pole
0.55KW					
4.9	960	279	0.85	MK67 MR37 MKF67 MR37 MKA67 MR37 MKAF67 MR37	4P
5.5	840	246	0.95		
6.2	745	217	1.10		
7.1	660	191	1.25		
8.2	570	166	1.45		
9.4	495	144	1.65		
11	420	122	1.95		
7.1	660	192	0.90	MK57 MR37 MKF57 MR37 MKA57 MR37 MKAF57 MR37	4P
8.2	575	166	1.05		
9.4	495	145	1.20		
11	445	129	1.35		
12	380	111	1.60		
14	335	97	1.80		
3.9	1350	174.19	2.0	MK 87 MKF 87 MKA 87 MKAF 87	8P
4.1	1270	164.34	2.1		
4.6	1140	147.32	2.4		
4.6	1150	197.37	2.3	MK 87 MKF 87 MKA 87 MKAF 87	6P
5.2	1020	174.19	2.7		
5.5	960	164.34	2.8		
6.1	860	147.33	3.1		
5.0	1040	135.28	1.50	MK 77 MKF 77 MKA 77 MKAF 77	8P
5.3	990	128.52	1.55		
6.0	880	113.56	1.75		
7.0	750	97.05	2.1		
5.8	900	154.02	1.70	MK 77 MKF 77 MKA 77 MKAF 77	6P
6.7	790	135.28	1.95		
7.0	750	128.52	2.1		
7.9	665	113.56	2.3		
8.8	595	154.02	2.6	MK 77 MKF 77 MKA 77 MKAF 77	4P
10	520	135.28	3.0		
11	495	128.52	3.1		
12	440	113.56	3.5		
14	375	97.05	4.1		
7.3	720	123.54	1.15	MK 67 MKF 67 MKA 67 MKAF 67	6P
8.3	630	108.03	1.30		
8.8	600	102.62	1.35		
10	525	90.04	1.55		
12	445	76.37	1.85		
11	475	123.54	1.70	MK 67 MKF 67 MKA 67 MKAF 67	4P
13	415	108.03	1.95		
15	350	90.04	2.4		
18	295	76.37	2.8		
13	405	104.37	1.00	MK 47 MKF 47 MKA 47 MKAF 47	4P
15	350	90.86	1.15		
16	330	85.12	1.20		
18	290	75.20	1.40		
19	270	69.84	1.50		
21	245	63.30	1.65		
24	220	56.83	1.80		
28	189	48.95	2.1		
30	178	46.04	2.2		

Output speed (r/min)	Output torque (N.M)	Ratio (i)	Service Factor (fs)	Type	Motor Pole
0.55KW					
23	225	58.60	0.90	MK 37 MKF 37 MKA 37 MKAF 37	4P
27	192	49.79	1.05		
31	172	44.46	1.15		
36	147	37.97	1.35		
38	137	35.57	1.45		
45	116	29.96	1.75		
47	111	28.83	1.80		
54	97	24.99	2.1		
58	90	23.36	2.2		
67	78	20.19	2.4		
79	66	17.15	2.7		
89	59	15.32	3.0		
104	51	13.08	3.3		
112	47	12.14	3.4		
130	41	10.49	4.0		
153	34	8.91	4.7		
171	31	7.96	5.1		
200	26	6.80	5.7		
214	25	6.37	5.9		
254	21	5.36	6.8		
0.75KW					
0.42	15100	3311	0.85	MK127 MR77 MKF127 MR77 MKA127 MR77 MKAF127 MR77	4P
0.46	13700	3009	0.95		
0.53	11800	2607	1.10		
0.72	8930	1926	1.45		
0.79	8150	1757	1.60		
0.90	7120	1541	1.85		
1.0	6220	1342	2.1		
1.2	5440	1177	2.4		
1.4	4750	1025	2.7		
1.5	4150	899	3.1		
0.81	7960	1713	1.00	MK107 MR77 MKF107 MR77 MKA107 MR77 MKAF107 MR77	4P
0.89	7230	1554	1.10		
1.0	6210	1336	1.30		
1.2	5420	1166	1.50		
1.3	4710	1030	1.70		
1.5	4120	904	1.95		
1.7	3680	793	2.2		
2.0	3210	696	2.5		
2.2	2800	615	2.8		
1.2	5180	1102	0.85	MK97 MR57 MKF97 MR57 MKA97 MR57 MKAF97 MR57	4P
1.4	4490	957	0.95		
1.6	4020	855	1.05		
1.9	3430	743	1.25		
2.1	3020	652	1.40		
2.4	2680	573	1.60		
2.7	2320	504	1.85		
3.2	2010	437	2.1		
3.6	1770	382	2.4		
4.5	1420	305	3.0		
5.4	1190	258	3.6		
5.9	1080	232	4.0		
6.9	920	199	4.7		

Output speed (r/min)	Output torque (N.M)	Ratio (i)	Service Factor (fs)	Type	Motor Pole
0.75KW					
1.9	3370	726	0.80		
2.2	2970	638	0.90		
2.5	2610	562	1.05		
2.9	2200	474	1.25	MK87 MR57	
3.2	1980	426	1.35	MKF87 MR57	
3.7	1720	373	1.55	MKA87 MR57	4P
4.2	1520	330	1.80	MKAF87MR57	
4.7	1350	294	2.0		
5.5	1160	250	2.3		
5.8	1100	236	2.5		
6.9	930	201	2.9		
3.8	1720	367	0.90		
4.2	1540	328	1.00	MK77 MR37	
4.8	1360	290	1.15	MKF77 MR37	
5.5	1180	252	1.30	MKA77 MR37	4P
6.2	1030	221	1.50	MKAF77 MR37	
3.9	1830	176.05	2.3	MK 97	
4.5	1590	153.21	2.7	MKF 97	
4.9	1460	140.28	3.0	MKA 97	8P
				MKAF 97	
4.7	1530	147.32	1.75	MK 87	
5.4	1320	126.91	2.0	MKF 87	
6.0	1200	115.82	2.2	MKA 87	8P
6.7	1070	102.71	2.5	MKAF 87	
5.2	1390	174.19	1.95	MK 87	
5.5	1310	164.34	2.1	MKF 87	
6.1	1170	147.32	2.3	MKA 87	6P
7.1	1010	126.91	2.7	MKAF 87	
7.0	1020	197.37	2.6	MK 87	
7.9	900	174.19	3.0	MKF 87	
8.4	850	164.34	3.2	MKA 87	4P
9.4	765	147.32	3.5	MKAF 87	
6.7	1080	135.28	1.45	MK 77	
7.0	1020	128.52	1.50	MKF 77	
7.9	900	113.56	1.70	MKA 77	6P
9.3	770	97.05	2.0	MKAF 77	
10	710	88.97	2.2		
9.0	800	154.02	1.95	MK 77	
10	700	135.28	2.2	MKF 77	
11	665	128.52	2.3	MKA 77	4P
12	590	113.56	2.6	MKAF 77	
14	505	97.05	3.1		
11	640	123.54	1.30		
13	560	108.03	1.45		
15	465	90.04	1.75	MK 67	
18	395	76.37	2.1	MKF 67	
20	360	68.95	2.3	MKA 67	4P
23	315	60.66	2.6	MKAF 67	
24	295	57.28	2.8		

Output speed (r/min)	Output torque (N.M)	Ratio (i)	Service Factor (fs)	Type	Motor Pole
0.75KW					
18	390	75.20	1.00		
20	365	69.84	1.10		
22	330	63.30	1.20	MK 47	
24	295	56.83	1.35	MKF 47	
28	255	48.95	1.55	MKA 47	4P
30	240	46.04	1.65	MKAF 47	
35	205	39.61	1.95		
39	184	35.39	2.2		
44	162	31.30	2.5		
31	230	44.46	0.85		
36	197	37.97	1.00		
39	185	35.57	1.10		
46	156	29.96	1.30		
48	150	28.83	1.35		
55	130	24.99	1.55		
59	121	23.36	1.60		
68	105	20.19	1.75		
80	89	17.15	2.0	MK 37	
90	80	15.32	2.2	MKF 37	4P
105	68	13.08	2.4	MKA 37	
114	63	12.14	2.5	MKAF 37	
132	54	10.49	2.9		
155	46	8.91	3.5		
173	41	7.96	3.8		
203	35	6.80	4.2		
217	33	6.37	4.4		
257	28	5.36	5.0		
1.1KW					
0.73	13100	1926	1.00		
0.80	11900	1757	1.10		
0.91	10400	1541	1.25		
1.0	9100	1342	1.45	MK127 MR77	
1.2	7960	1177	1.65	MKF127 MR77	
1.4	6950	1025	1.85	MKA127 MR77	4P
1.6	6080	899	2.1	MKAF127 MR77	
1.8	5270	790	2.5		
2.0	4740	704	2.7		
2.3	4090	610	3.2		
2.5	3690	549	3.5		
2.9	3180	477	4.1		
1.2	7920	1166	1.00		
1.4	6920	1030	1.15		
1.5	6050	904	1.30		
1.8	5380	793	1.50	MK107 MR77	
2.0	4700	696	1.70	MKF107 MR77	4P
2.3	4120	615	1.95	MKA107 MR77	
2.7	3500	522	2.3	MKAF107 MR77	
3.0	3080	461	2.6		
3.4	2720	408	2.9		
3.8	2450	364	3.3		
4.4	2140	318	3.7		
1.9	5030	743	0.85		
2.2	4420	652	0.95	MK97 MR57	
2.4	3910	573	1.10	MKF97 MR57	4P
2.8	3400	504	1.25	MKA97 MR57	
3.2	2940	437	1.45	MKAF97 MR57	
3.7	2590	382	1.65		
4.1	2300	342	1.85		

Output speed (r/min)	Output torque (N.M)	Ratio (i)	Service Factor (fs)	Type	Motor Pole
1.1KW					
3.0	3220	474	0.85		
3.3	2890	426	0.95		
3.8	2520	373	1.05	MK87 MR57	
4.2	2230	330	1.20	MKF87 MR57	
4.8	1980	294	1.35	MKA87 MR57	4P
5.6	1700	250	1.60	MKAF87MR57	
5.9	1600	236	1.70		
7.0	1360	201	2.0		
3.9	2720	176.05	1.60	MK 97	
4.4	2370	153.21	1.80	MKF 97	8P
4.8	2170	140.28	2.0	MKA 97	
5.5	1910	123.93	2.2	MKAF 97	
5.2	2010	176.05	2.1	MK 97	
6.0	1750	153.21	2.5	MKF 97	6P
6.6	1600	140.28	2.7	MKA 97	
7.4	1420	123.93	3.0	MKAF 97	
7.9	1320	176.05	3.3	MK 97	
9.1	1150	153.21	3.7	MKF 97	4P
10	1050	140.28	4.1	MKA 97	
				MKAF 97	
5.3	1990	174.19	1.35	MK 87	
5.6	1880	164.34	1.45	MKF 87	6P
6.2	1680	147.33	1.60	MKA 87	
7.2	1450	126.91	1.85	MKAF 87	
8.0	1310	174.19	2.1	MK 87	
8.5	1230	164.34	2.2	MKF 87	4P
9.5	1110	147.32	2.4	MKA 87	
11	950	126.91	2.8	MKAF 87	
12	870	115.82	3.1		
6.8	1540	135.28	1.00	MK 77	
7.2	1470	128.52	1.05	MKF 77	6P
8.1	1300	113.56	1.20	MKA 77	
9.5	1110	97.05	1.40	MKAF 77	
10	1020	135.28	1.55		
11	960	128.52	1.60	MK 77	
12	850	113.56	1.80	MKF 77	4P
14	730	97.05	2.1	MKA 77	
16	670	88.97	2.3	MKAF 77	
18	585	78.07	2.7		
19	555	73.99	2.8		
13	810	108.03	1.00		
14	770	102.62	1.05		
16	675	90.04	1.20		
18	575	76.37	1.45	MK 67	
20	515	68.95	1.60	MKF 67	4P
23	455	60.66	1.80	MKA 67	
24	430	57.28	1.90	MKAF 67	
29	365	48.77	2.2		
32	335	44.32	2.5		
36	290	38.39	2.8		

Output speed (r/min)	Output torque (N.M)	Ratio (i)	Service Factor (fs)	Type	Motor Pole
1.1KW					
25	425	56.83	0.95		
29	265	48.95	1.10		
30	345	46.04	1.15		
35	295	39.61	1.35		
40	265	35.39	1.50	MK 47	
45	235	31.30	1.70	MKF 47	4P
48	220	29.32	1.80	MKA 47	
54	194	25.91	2.1	MKAF 47	
64	164	21.81	2.4		
72	147	19.58	2.7		
47	225	29.96	0.90		
56	188	24.99	1.05		
60	175	23.36	1.10		
69	152	20.19	1.20		
82	129	17.15	1.40		
91	115	15.32	1.50	MK 37	
107	98	13.08	1.70	MKF 37	
115	91	12.14	1.75	MKA 37	4P
133	79	10.49	2.0	MKAF 37	
157	67	8.91	2.4		
176	60	7.96	2.6		
206	51	6.80	2.9		
220	48	6.37	3.0		
261	40	5.36	3.5		
1.5KW					
2.6	4820	536	2.7	MK127 MR87	
3.4	3770	418	3.5	MKF127 MR87	4P
3.8	3330	367	3.9	MKA127 MR87	
				MKAF127 MR87	
0.80	16200	1757	0.80		
0.91	14200	1541	0.90		
1.0	12400	1342	1.05		
1.2	10900	1177	1.20		
1.4	9470	1025	1.35	MK127 MR77	
1.6	8300	899	1.55	MKF127 MR77	4P
1.8	7210	790	1.80	MKA127 MR77	
2.0	6480	704	2.0	MKAF127 MR77	
2.3	5590	610	2.3		
2.6	5040	549	2.6		
3.0	4360	477	3.0		
3.4	3840	418	3.4		
1.4	9460	1030	0.85		
1.6	8280	904	0.95		
1.8	7330	793	1.10		
2.0	6420	696	1.25	MK107 MR77	
2.3	5640	615	1.40	MKF107 MR77	4P
2.7	4780	522	1.65	MKA107 MR77	
3.1	4210	461	1.90	MKAF107 MR77	
3.5	3720	408	2.2		
3.9	3350	364	2.4		
4.4	2920	318	2.7		
2.5	5320	573	0.80		
2.8	4650	504	0.95		
3.2	4020	437	1.05		
3.7	3540	382	1.20	MK97 MR57	
4.1	3140	342	1.35	MKF97 MR57	4P
4.6	2820	305	1.50	MKA97 MR57	
5.5	2380	258	1.80	MKAF97 MR57	
6.1	2140	232	2.0		
7.1	1840	199	2.3		

Output speed (r/min)	Output torque (N.M)	Ratio (i)	Service Factor (fs)	Type	Motor Pole
1.5KW					
4.3	3040	330	0.90	MK87 MR57	4P
4.8	2700	294	1.00	MKF87 MR57	
5.6	2310	250	1.15	MKA87 MR57	
6.0	2180	236	1.25	MKAF87MR57	
7.0	1860	201	1.45		
7.7	1690	183	1.60		
4.9	2940	143.47	2.7	MK 107	8P
5.8	2490	121.46	3.2	MKF 107	
6.2	2300	112.41	3.5	MKA 107	
				MKAF 107	
4.6	3140	153.21	1.35	MK 97	8P
5.0	2870	140.28	1.50	MKF 97	
5.7	2540	123.93	1.70	MKA 97	
				MKAF 97	
5.2	2740	176.05	1.55	MK 97	6P
6.0	2390	153.21	1.80	MKF 97	
6.6	2180	140.28	1.95	MKA 97	
7.4	1930	123.93	2.2	MKAF 97	
8.0	1790	176.05	2.4	MK 97	4P
9.2	1560	153.21	2.8	MKF 97	
10	1430	140.28	3.0	MKA 97	
11	1260	123.93	3.4	MKAF 97	
6.2	2290	147.33	1.20	MK 87	6P
7.2	1980	126.91	1.35	MKF 87	
7.9	1800	115.82	1.50	MKA 87	
9.0	1600	102.71	1.70	MKAF 87	
8.1	1770	174.19	1.55	MK 87	4P
8.6	1670	164.34	1.60	MKF 87	
9.6	1500	147.32	1.80	MKA 87	
11	1290	126.91	2.1	MKAF 87	
12	1180	115.82	2.3		
14	1040	102.71	2.6		
16	880	86.34	3.1		
8.1	1770	113.56	0.90	MK 77	6P
9.5	1510	97.05	1.05	MKF 77	
10	1390	88.97	1.10	MKA 77	
12	1220	78.07	1.30	MKAF 77	
10	1370	135.28	1.15	MK 77	4P
11	1310	128.52	1.20	MKF 77	
12	1150	113.56	1.35	MKA 77	
15	990	97.05	1.55	MKAF 77	
16	900	88.97	1.70		
18	795	78.07	1.95		
19	750	73.99	2.1		
22	660	64.76	2.4		
24	595	58.34	2.6		
28	520	51.18	3.0		
31	460	45.16	3.4		
35	405	40.04	3.8		
16	910	90.04	0.90	MK 67	4P
18	775	76.37	1.05	MKF 67	
20	700	68.95	1.15	MKA 67	
23	615	60.66	1.35	MKAF 67	
25	580	57.28	1.40		
29	495	48.77	1.65		
32	450	44.32	1.80		
37	390	38.39	2.0		
40	360	35.62	2.3		
47	305	30.22	2.7		
52	275	27.28	3.0		
59	245	24.00	3.3		

Output speed (r/min)	Output torque (N.M)	Ratio (i)	Service Factor (fs)	Type	Motor Pole
1.5KW					
36	400	39.61	1.00	MK 47	4P
40	360	35.39	1.10	MKF 47	
45	320	31.30	1.25	MKA 47	
48	300	29.32	1.35	MKAF 47	
54	265	25.91	1.50		
65	220	21.81	1.80		
72	199	19.58	2.0		
84	171	16.86	2.2		
89	161	15.86	2.4		
103	139	13.65	2.6		
116	124	12.19	2.8		
120	120	11.77	2.3		
60	235	23.36	0.80	MK 37	4P
70	205	20.19	0.90	MKF 37	
82	174	17.15	1.05	MKA 37	
92	156	15.32	1.10	MKAF 37	
108	133	13.08	1.25		
116	123	12.14	1.30		
134	107	10.49	1.50		
158	91	8.91	1.75		
177	81	7.96	1.90		
207	69	6.80	2.2		
221	65	6.37	2.2		
263	55	5.36	2.6		
2.2KW					
2.6	7180	536	1.80	MK127 MR87	4P
3.0	6310	473	2.1	MKF127 MR87	
3.4	5600	418	2.3	MKA127 MR87	
3.8	4950	367	2.6	MKAF127 MR87	
4.3	4440	330	2.9		
1.4	14000	1025	0.95	MK127 MR77	4P
1.6	12200	899	1.05	MKF127 MR77	
1.8	10700	790	1.20	MKA127 MR77	
2.0	9580	704	1.35	MKAF127 MR77	
2.3	8280	610	1.55		
2.6	7460	549	1.75		
3.0	6460	477	2.0		
3.4	5680	418	2.3		
2.3	8340	615	0.95	MK107 MR77	4P
2.7	7070	522	1.15	MKF107 MR77	
3.1	6230	461	1.30	MKA107 MR77	
3.5	5520	408	1.45	MKAF107 MR77	
3.9	4940	364	1.60		
4.4	4320	318	1.85		
4.9	3890	286	2.1		
5.6	3410	251	2.3		
3.7	5210	382	0.80	MK97 MR57	4P
4.1	4640	342	0.95	MKF97 MR57	
4.6	4170	305	1.05	MKA97 MR57	
5.5	3510	258	1.20	MKAF97 MR57	
6.1	3160	232	1.35		
7.1	2710	199	1.60		
4.9	4310	143.47	1.85	MK 107	8P
5.8	3650	121.46	2.2	MKF 107	
6.2	3370	112.41	2.4	MKA 107	
6.9	3020	100.75	2.7	MKAF 107	

Output speed (r/min)	Output torque (N.M)	Ratio (i)	Service Factor (fs)	Type	Motor Pole
2.2KW					
6.1	3420	153.21	1.25	MK 97 MKF 97 MKA 97 MKAF 97	6P
6.7	3140	140.28	1.35		
7.6	2770	123.93	1.55		
8.9	2350	105.13	1.85		
8.0	2620	176.05	1.65	MK 97 MKF 97 MKA 97 MKAF 97	4P
9.2	2280	153.21	1.90		
10	2090	140.28	2.1		
11	1850	123.93	2.3		
13	1570	105.13	2.8		
15	1440	96.80	3.0		
9.6	2200	147.32	1.25	MK 87 MKF 87 MKA 87 MKAF 87	4P
11	1890	126.91	1.45		
12	1730	115.82	1.55		
14	1530	102.71	1.75		
16	1290	86.34	2.1		
18	1180	79.34	2.3		
20	1050	70.46	2.6		
22	940	63.00	2.9		
12	1690	113.56	0.90	MK 77 MKF 77 MKA 77 MKAF 77	4P
15	1450	97.05	1.05		
16	1330	88.97	1.15		
18	1160	78.07	1.35		
19	1100	73.99	1.40		
22	960	64.76	1.60		
24	870	58.34	1.80		
28	765	51.18	2.0		
31	675	45.16	2.3		
35	595	40.04	2.6		
40	525	35.19	3.0		
46	460	30.88	3.4		
48	435	29.26	3.6		
55	380	25.61	4.1		
23	900	60.66	0.90	MK 67 MKF 67 MKA 67 MKAF 67	4P
25	850	57.28	0.95		
29	725	48.77	1.15		
32	660	44.32	1.25		
37	570	38.39	1.40		
40	530	35.61	1.55		
47	450	30.21	1.80		
52	405	27.27	2.0		
59	360	23.99	2.2		
62	340	22.66	2.3		
73	285	19.29	2.6		
80	260	17.53	2.8		
93	225	15.19	3.1		
107	197	13.22	3.4		
113	186	12.48	2.8		
133	158	10.63	3.2		
146	144	9.66	3.3		
169	125	8.37	3.5		
194	109	7.28	3.9		

Output speed (r/min)	Output torque (N.M)	Ratio (i)	Service Factor (fs)	Type	Motor Pole
2.2KW					
54	385	25.91	1.05	MK 47 MKF 47 MKA 47 MKAF 47	4P
65	325	21.81	1.25		
72	290	19.58	1.35		
84	250	16.86	1.50		
89	235	15.86	1.60		
103	205	13.65	1.75		
116	182	12.19	1.95		
120	175	11.77	1.60		
133	157	10.56	1.80		
155	136	9.10	2.1		
108	195	13.08	0.85	MK 37 MKF 37 MKA 37 MKAF 37	4P
134	156	10.49	1.00		
158	133	8.91	1.20		
177	119	7.96	1.30		
207	101	6.80	1.50		
221	95	6.37	1.55		
263	80	5.36	1.75		
3.0KW					
2.6	9940	536	1.30	MK127 MR87 MKF127 MR87 MKA127 MR87 MKAF127 MR87	4P
3.0	8750	473	1.50		
3.3	7760	418	1.70		
3.8	6840	367	1.90		
4.2	6140	330	2.1		
4.9	5300	287	2.5		
1.8	14800	790	0.90	MK127 MR77 MKF127 MR77 MKA127 MR77 MKAF127 MR77	4P
2.0	13200	704	1.00		
2.3	11400	610	1.15		
2.5	10300	549	1.25		
2.9	8920	477	1.45		
3.3	7840	418	1.65		
3.0	8610	461	0.95	MK107 MR77 MKF107 MR77 MKA107 MR77 MKAF107 MR77	4P
3.4	7620	408	1.05		
3.8	6820	364	1.15		
4.4	5960	318	1.35		
4.9	5370	286	1.50		
5.6	4700	251	1.70		
6.3	4150	222	1.95		
7.1	3670	196	2.2		
8.1	3250	174	2.2		
9.1	2880	154	2.5		
10	2610	140	2.8		
5.4	4840	258	0.90	MK97 MR57 MKF97 MR57 MKA97 MR57 MKAF97 MR57	4P
6.0	4360	232	1.00		
7.0	3740	199	1.15		
5.0	5710	143.47	1.40	MK 107 MKF 107 MKA 107 MKAF 107	8P
5.9	4830	121.46	1.65		
6.4	4470	112.41	1.80		
7.2	4010	100.75	2.0		
7.9	3620	90.96	2.2		
6.6	4370	143.47	1.85	MK 107 MKF 107 MKA 107 MKAF 107	6P
7.7	3700	121.46	2.2		
8.4	3430	112.41	2.3		
9.3	3070	100.75	2.6		

Output speed (r/min)	Output torque (N.M)	Ratio (i)	Service Factor (fs)	Type	Motor Pole
3.0KW					
9.8	2940	143.47	2.7	MK 107 MKF 107 MKA 107 MKAF 107	4P
12	2490	121.46	3.2		
7.6	3780	123.93	1.15	MK 97 MKF 97 MKA 97 MKAF 97	6P
8.9	3200	105.13	1.35		
9.7	2950	96.80	1.45		
11	2640	86.52	1.65		
7.9	3600	176.05	1.20	MK 97 MKF 97 MKA 97 MKAF 97	4P
9.1	3140	153.21	1.35		
10	2870	140.28	1.50		
11	2540	123.93	1.70		
13	2150	105.13	2.0		
14	1980	96.80	2.2		
16	1770	86.52	2.4		
18	1590	77.89	2.7		
20	1440	70.54	3.0		
22	1280	62.55	3.4		
25	1160	56.55	3.7		
9.5	3010	147.33	0.90	MK 87 MKF 87 MKA 87 MKAF 87	4P
11	2600	126.91	1.05		
12	2370	115.82	1.15		
14	2100	102.71	1.30		
16	1770	86.34	1.55		
18	1620	79.34	1.65		
20	1440	70.46	1.85		
22	1290	63.00	2.1		
25	1160	56.64	2.3		
28	1010	49.16	2.7		
32	900	44.02	2.9		
38	745	36.52	3.3		
16	1820	88.97	0.85	MK 77 MKF 77 MKA 77 MKAF 77	4P
18	1600	78.07	0.95		
19	1510	73.99	1.00		
22	1330	64.76	1.15		
24	1190	58.34	1.30		
27	1050	51.18	1.50		
31	920	45.16	1.70		
35	820	40.04	1.90		
40	720	35.19	2.2		
45	630	30.88	2.5		
32	910	44.32	0.90	MK 67 MKF 67 MKA 67 MKAF 67	4P
36	785	38.39	1.00		
39	730	35.61	1.15		
46	620	30.21	1.35		
51	560	27.27	1.45		
58	490	23.99	1.65		
62	465	22.66	1.70		
73	395	19.29	1.95		
80	360	17.53	2.1		
92	310	15.19	2.2		
106	270	13.22	2.5		
112	255	12.48	2.1		
132	220	10.63	2.3		
145	198	9.66	2.4		

Output speed (r/min)	Output torque (N.M)	Ratio (i)	Service Factor (fs)	Type	Motor Pole
3.0KW					
72	400	19.58	1.00	MK 47 MKF 47 MKA 47 MKAF 47	4P
83	345	16.86	1.10		
88	325	15.86	1.15		
103	280	13.65	1.30		
115	250	12.19	1.40		
119	240	11.77	1.15		
133	215	10.56	1.30		
154	186	9.10	1.50		
164	175	8.56	1.55		
190	151	7.36	1.65		
213	135	6.58	1.80		
241	119	5.81	1.95		
157	182	8.91	0.90	MK 37 MKF 37 MKA 37 MKAF 37	4P
176	163	7.96	0.95		
206	139	6.80	1.10		
220	130	6.37	1.10		
261	110	5.36	1.30		
4.0KW					
2.7	13100	536	1.00	MK127 MR87 MKF127 MR87 MKA127 MR87 MKAF127 MR87	4P
3.0	11600	473	1.10		
3.4	10300	418	1.25		
3.9	9040	367	1.45		
4.3	8120	330	1.60		
5.0	7010	287	1.85		
5.6	6200	253	2.1		
2.3	15100	610	0.85	MK127 MR77 MKF127 MR77 MKA127 MR77 MKAF127 MR77	4P
2.6	13600	549	0.95		
3.0	11800	477	1.10		
3.4	10300	418	1.25		
3.9	8990	364	0.90	MK107 MR77 MKF107 MR77 MKA107 MR77 MKAF107 MR77	4P
4.5	7860	318	1.00		
5.0	7080	286	1.15		
5.7	6200	251	1.30		
6.4	5470	222	1.45		
7.2	4840	196	1.65		
8.2	4290	174	1.70		
9.2	3800	154	1.90		
10	3440	140	2.1		
7.1	4930	199	0.85	MK97 MR57 MKF97 MR57 MKA97 MR57 MKAF97 MR57	4P
6.4	5960	112.41	1.35	MK 107 MKF 107 MKA 107 MKAF 107	8P
7.2	5340	100.75	1.50		
7.9	4830	90.96	1.65		
8.7	4380	82.61	1.85		
6.7	5710	143.47	1.40	MK 107 MKF 107 MKA 107 MKAF 107	6P
7.9	4830	121.46	1.65		
8.5	4470	100.75	1.80		
9.5	4010	112.41	2.0		
11	3620	90.96	2.2		
9.9	3860	143.47	2.1	MK 107 MKF 107 MKA 107 MKAF 107	4P
12	3270	121.46	2.5		
13	3020	112.41	2.7		
14	2710	100.75	3.0		
16	2450	90.96	3.3		
17	2220	82.61	3.6		
19	1970	73.30	4.1		

Output speed (r/min)	Output torque (N.M)	Ratio (i)	Service Factor (fs)	Type	Motor Pole
4.0KW					
9.3	4120	153.21	1.05	MK 97 MKF 97 MKA 97 MKAF 97	4P
10	3770	140.28	1.15		
11	3330	123.93	1.30		
14	2830	105.13	1.50		
15	2600	96.80	1.65		
16	2330	86.52	1.85		
18	2100	77.89	2.0		
20	1900	70.54	2.3		
12	3120	115.82	0.85	MK 87 MKF 87 MKA 87 MKAF 87	4P
14	2760	102.71	1.00		
16	2320	86.34	1.15		
18	2130	79.34	1.25		
20	1900	70.46	1.40		
23	1690	63.00	1.60		
25	1520	56.64	1.75		
29	1320	49.16	2.0		
32	1180	44.02	2.2		
39	980	36.52	2.5		
22	1740	64.76	0.90	MK 77 MKF 77 MKA 77 MKAF 77	4P
24	1570	58.34	1.00		
28	1380	51.18	1.15		
31	1210	45.16	1.30		
35	1080	40.04	1.45		
37	1030	38.39	1.45		
40	950	35.19	1.65		
46	830	30.88	1.85		
49	785	29.26	1.95		
55	690	25.61	2.2		
62	620	23.08	2.5		
70	545	20.24	2.8		
47	810	30.21	1.00	MK 67 MKF 67 MKA 67 MKAF 67	4P
52	735	27.27	1.10		
59	645	23.99	1.25		
63	610	22.66	1.30		
74	520	19.29	1.45		
81	470	17.53	1.55		
94	410	15.19	1.70		
107	355	13.22	1.90		
114	335	12.48	1.60		
134	285	10.63	1.75		
147	260	9.66	1.85		
170	225	8.37	1.95		
195	196	7.28	2.1		
5.5KW					
3.4	14100	418	0.90	MK127 MR77 MKF127 MR77 MKA127 MR77 MKAF127 MR77	4P
3.9	12400	367	1.05		
4.3	11100	330	1.15		
5.0	9620	287	1.35		
5.6	8510	253	1.55		
6.7	7150	213	1.80		
7.1	6740	200	1.80		
8.6	5580	166	2.2		
9.8	4920	147	2.4		

Output speed (r/min)	Output torque (N.M)	Ratio (i)	Service Factor (fs)	Type	Motor Pole
5.5KW					
6.4	7490	222	1.05	MK107 MR77 MKF107 MR77 MKA107 MR77 MKAF107 MR77	4P
7.3	6640	196	1.20		
8.2	5870	174	1.25		
9.3	5200	154	1.40		
10	4720	140	1.55		
5.2	10100	136.35	1.30	MK 127 MKF 127 MKA 127 MKAF 127	8P
5.8	9060	122.67	1.45		
6.4	8150	110.35	1.60		
7.9	6650	90.03	1.95		
7.1	7450	136.35	1.75	MK 127 MKF 127 MKA 127 MKAF 127	6P
7.8	6700	122.67	1.95		
8.7	6030	110.35	2.2		
11	4920	90.03	2.6		
8.5	6150	112.41	1.30	MK 107 MKF 107 MKA 107 MKAF 107	6P
9.5	5510	100.75	1.45		
11	4980	90.96	1.60		
12	4520	82.61	1.75		
10	5270	143.47	1.50	MK 107 MKF 107 MKA 107 MKAF 107	4P
12	4460	121.46	1.80		
13	4130	112.41	1.95		
14	3700	100.75	2.2		
16	3340	90.96	2.4		
17	3030	82.61	2.6		
12	4550	123.93	0.95	MK 97 MKF 97 MKA 97 MKAF 97	4P
14	3860	105.13	1.10		
15	3560	93.80	1.20		
17	3180	86.52	1.35		
18	2860	77.89	1.50		
20	2590	70.54	1.65		
23	2300	62.55	1.85		
25	2080	56.55	2.1		
30	1760	47.93	2.4		
17	3170	86.34	0.85	MK 87 MKF 87 MKA 87 MKAF 87	4P
18	2910	79.34	0.95		
20	2590	70.46	1.05		
23	2310	63.00	1.15		
25	2080	56.64	1.30		
29	1810	49.16	1.50		
32	1620	44.02	1.60		
39	1340	36.52	1.85		
46	1150	31.38	2.3		
51	1020	27.87	2.5		
32	1660	45.16	0.95	MK 77 MKF 77 MKA 77 MKAF 77	4P
36	1470	40.04	1.05		
46	1130	30.88	1.35		
49	1070	29.26	1.45		
56	940	25.61	1.65		
62	850	23.08	1.85		
71	745	20.24	2.0		
80	655	17.86	2.2		
90	580	15.84	2.4		
106	495	13.52	2.7		
116	455	12.33	2.2		
132	400	10.81	2.5		

Output speed (r/min)	Output torque (N.M)	Ratio (i)	Service Factor (fs)	Type	Motor Pole
5.5KW					
60	880	23.99	0.90	MK 67 MKF 67 MKA 67 MKAF 67	4P
63	830	22.66	0.95		
74	710	19.29	1.05		
82	645	17.53	1.15		
94	560	15.19	1.25		
108	485	13.22	1.40		
115	460	12.48	1.15		
135	390	10.63	1.30		
148	355	9.66	1.35		
171	305	8.37	1.45		
196	265	7.28	1.55		
7.5KW					
4.3	15200	330	0.85	MK127 MR77 MKF127 MR77 MKA127 MR77 MKAF127 MR77	4P
5.0	13200	287	1.00		
5.6	11600	253	1.10		
6.7	9790	213	1.35		
7.1	9220	200	1.30		
8.6	7640	166	1.55		
9.8	6740	147	1.80		
7.1	10200	136.35	1.30	MK 127 MKF 127 MKA 127 MKAF 127	6P
7.8	9140	122.67	1.40		
8.7	8220	110.35	1.60		
11	6710	90.03	1.95		
9.8	7320	146.30	1.80	MK 127 MKF 127 MKA 127 MKAF 127	4P
11	6820	136.35	1.90		
12	6130	122.67	2.1		
13	5520	110.35	2.4		
16	4500	90.03	2.9		
17	4110	82.11	3.2		
20	3550	71.06	3.7		
10	7190	143.47	1.10	MK 107 MKF 107 MKA 107 MKAF 107	4P
12	6080	121.46	1.30		
13	5630	112.41	1.40		
14	5050	100.75	1.60		
16	4560	90.96	1.75		
17	4140	82.61	1.95		
20	3670	73.30	2.2		
22	3330	66.52	2.4		
25	2860	57.17	2.8		
29	2500	49.90	3.1		
34	2120	42.33	3.5		
39	1850	37.00	3.9		
15	4850	96.80	0.90	MK 97 MKF 97 MKA 97 MKAF 97	4P
17	4330	86.52	1.00		
18	3900	77.89	1.10		
20	3530	70.54	1.20		
23	3130	62.55	1.35		
25	2830	56.55	1.50		
30	2400	47.93	1.80		
34	2100	41.87	2.0		
37	1920	38.29	2.2		
42	1710	34.22	2.5		

Output speed (r/min)	Output torque (N.M)	Ratio (i)	Service Factor (fs)	Type	Motor Pole
7.5KW					
23	3160	63.00	0.85	MK 87 MKF 87 MKA 87 MKAF 87	4P
25	2840	56.64	0.95		
29	2460	49.16	1.10		
32	2200	44.02	1.20		
39	1830	36.52	1.35		
46	1570	31.38	1.70		
51	1400	27.87	1.85		
57	1250	24.92	2.0		
64	1120	22.40	2.0		
74	970	19.45	2.4		
82	870	17.41	2.5		
89	800	16.00	2.2		
99	725	14.44	2.9		
46	1550	30.88	1.00	MK 77 MKF 77 MKA 77 MKAF 77	4P
49	1470	29.26	1.05		
56	1280	25.61	1.20		
62	1160	23.08	1.35		
71	1010	20.24	1.50		
80	890	17.86	1.60		
90	795	15.84	1.75		
106	675	13.52	2.0		
116	620	12.33	1.60		
132	545	10.81	1.80		
150	480	9.54	1.95		
169	425	8.46	2.13		
198	365	7.22	2.3		
11KW					
6.8	14300	213	0.90	MK127 MR87 MKF127 MR87 MKA127 MR87 MKAF127 MR87	4P
7.2	13500	200	0.90		
8.7	11200	166	1.10		
9.8	9850	147	1.20		
11	9930	136.35	1.30	MK 127 MKF 127 MKA 127 MKAF 127	4P
12	8930	122.67	1.45		
13	8040	110.35	1.60		
16	6560	90.03	2.0		
18	5980	82.11	2.2		
20	5180	71.06	2.5		
13	8200	112.41	1.00	MK 107 MKF 107 MKA 107 MKAF 107	4P
14	7350	100.75	1.10		
16	6630	90.96	1.20		
17	6030	82.61	1.35		
20	5350	73.30	1.50		
22	4850	66.52	1.65		
25	4170	57.17	1.90		
29	3640	49.90	2.2		
34	3090	42.33	2.4		
39	2700	37.00	2.7		
20	5150	70.54	0.85	MK 97 MKF 97 MKA 97 MKAF 97	4P
23	4560	62.55	0.95		
25	4130	56.55	1.05		
30	3500	47.93	1.25		
34	3050	41.87	1.40		
38	2790	38.29	1.55		
42	2500	34.22	1.70		
47	2250	30.81	1.90		
52	2040	27.90	2.1		
58	1800	24.74	2.4		
64	1630	22.37	2.6		

Output speed (r/min)	Output torque (N.M)	Ratio (i)	Service Factor (fs)	Type	Motor Pole
11KW					
33	3210	44.02	0.80		
39	2660	36.52	0.95		
46	2290	31.38	1.20		
52	2030	27.87	1.30	MK 87	
58	1820	24.92	1.40	MKF 87	
64	1630	22.40	1.40	MKA 87	4P
74	1420	19.45	1.60	MKAF 87	
83	1270	17.41	1.75		
90	1170	16.00	1.55		
100	1050	14.44	2.0		
115	920	12.56	2.2		
129	810	11.16	1.85		
144	730	10.00	2.1		
174	605	8.29	2.3		
200	525	7.21	2.5		
62	1680	23.08	0.90	MK 77	
71	1480	20.24	1.00	MKF 77	
81	1300	17.86	1.10	MKA 77	4P
91	1160	15.84	1.20	MKAF 77	
107	990	13.52	1.35		
117	900	12.33	1.10		
133	790	10.81	1.25		
151	700	9.54	1.35		
170	620	8.46	1.45		
199	530	7.22	1.55		
15KW					
11	13400	136.14	0.95		
12	12000	122.48	1.10		
13	10800	110.18	1.20	MK 127	
16	8820	89.89	1.45	MKF 127	
18	8040	81.98	1.60	MKA 127	4P
21	6960	70.95	1.85	MKAF 127	
23	6140	62.60	2.1		
27	5300	54.07	2.5		
31	4690	47.82	2.8		
26	5610	57.17	1.45		
29	4900	49.90	1.60	MK 107	
34	4150	42.33	1.75	MKF 107	
39	3630	37.00	2.0	MKA 107	4P
45	3210	32.68	2.2	MKAF 107	
47	3070	31.28	2.2		
50	2840	29.00	2.5		
30	4700	47.93	0.90		
35	4110	41.87	1.05		
38	3760	38.29	1.15		
43	3360	34.22	1.30	MK 97	
47	3020	30.81	1.40	MKF 97	
52	2740	27.90	1.55	MKA 97	4P
59	2430	24.74	1.75	MKAF 97	
65	2190	22.37	1.95		
77	1860	18.96	2.3		
88	1620	16.56	2.7		

Output speed (r/min)	Output torque (N.M)	Ratio (i)	Service Factor (fs)	Type	Motor Pole
15KW					
47	3080	31.38	0.90		
52	2730	27.87	0.95		
59	2440	24.92	1.00		
65	2200	22.40	1.05	MK 87	
75	1910	19.45	1.20	MKF 87	
84	1710	17.41	1.30	MKA 87	4P
91	1570	16.00	1.15	MKAF 87	
101	1420	14.44	1.50		
116	1230	12.56	1.60		
131	1100	11.16	1.35		
146	980	10.00	1.55		
176	810	8.29	1.70		
202	705	7.21	1.85		
18.5KW					
13	13300	110.35	1.00		
16	10800	90.03	1.20		
18	9890	82.11	1.30		
21	8560	71.06	1.50		
23	7550	62.70	1.70	MK 127	
27	6520	54.15	2.0	MKF 127	
31	5770	47.90	2.2	MKA 127	4P
36	4850	40.25	2.7	MKAF 127	
40	4370	36.30	3.0		
47	3780	31.41	3.4		
53	3340	27.72	3.9		
20	8840	73.30	0.90		
22	8020	66.52	1.00		
26	6890	57.17	1.15		
29	6020	49.90	1.30		
35	5100	42.33	1.45		
40	4460	37.00	1.60	MK 107	
45	3940	32.68	1.85	MKF 107	
47	3770	31.28	1.80	MKA 107	4P
51	3500	29.00	2.1	MKAF 107	
56	3170	26.32	2.3		
65	2730	22.62	2.6		
74	2380	19.74	3.0		
88	2020	16.75	3.5		
35	5050	41.87	0.85		
48	3720	30.81	1.15		
53	3360	27.90	1.30		
59	2980	24.74	1.45	MK 97	
65	2700	22.37	1.60	MKF 97	
77	2290	18.96	1.90	MKA 97	4P
88	2000	16.56	2.2	MKAF 97	
106	1670	13.85	2.6		
122	1450	11.99	2.7		
59	3000	24.92	0.85		
65	2700	22.40	0.85		
75	2340	19.45	1.00		
84	2100	17.41	1.05		
101	1740	14.45	1.20	MK 87	
117	1510	12.56	1.30	MKF 87	
131	1350	11.16	1.10	MKA 87	4P
147	1210	10.00	1.25	MKAF 87	
177	1000	8.29	1.40		
203	870	7.21	1.50		

Output speed (r/min)	Output torque (N.M)	Ratio (i)	Service Factor (fs)	Type	Motor Pole
22KW					
16	12900	90.03	1.00	MK 127 MKF 127 MKA 127 MKAF 127	4P
18	11800	82.11	1.10		
21	10200	71.06	1.30		
23	8980	62.70	1.45		
27	7750	54.15	1.70		
31	6860	47.90	1.90		
36	5760	40.25	2.3		
40	5200	36.30	2.5		
47	4500	31.41	2.9		
53	3970	27.72	3.3		
61	3430	23.94	3.8		
69	3030	21.71	4.3		
26	8200	57.17	1.00	MK 107 MKF 107 MKA 107 MKAF 107	4P
29	7160	49.90	1.10		
35	6070	42.33	1.20		
40	5310	37.00	1.35		
45	4690	32.69	1.55		
47	4490	31.28	1.50		
51	4160	29.00	1.75		
56	3770	26.32	1.90		
65	3240	22.62	2.2		
74	2830	19.74	2.5		
88	2400	16.75	2.9		
100	2100	14.63	3.3		
109	1930	13.43	2.2		
125	1680	11.73	2.6		
147	1430	9.94	2.9		
48	4420	30.82	0.95	MK 97 MKF 97 MKA 97 MKAF 97	4P
53	4000	27.91	1.05		
59	3550	24.75	1.20		
65	3210	22.37	1.35		
77	2720	18.96	1.60		
88	2370	16.56	1.80		
106	1990	13.85	2.2		
122	1720	11.99	2.3		
141	1490	10.41	1.90		
168	1250	8.71	2.1		
75	2790	19.45	0.80	MK 87 MKF 87 MKA 87 MKAF 87	4P
84	2500	17.41	0.90		
101	2070	14.44	1.00		
117	1800	12.56	1.10		
131	1600	11.16	0.95		
147	1430	10.00	1.05		
177	1190	8.29	1.20		
203	1030	7.21	1.25		
30KW					
21	13800	71.06	0.95	MK 127 MKF 127 MKA 127 MKAF 127	4P
23	12200	62.70	1.05		
27	10500	54.15	1.25		
31	9320	47.90	1.40		
37	7830	40.25	1.65		
41	7060	36.30	1.85		
47	6110	31.41	2.1		
53	5390	27.72	2.4		
62	4660	23.94	2.8		

Output speed (r/min)	Output torque (N.M)	Ratio (i)	Service Factor (fs)	Type	Motor Pole
30KW					
35	8250	42.33	0.90	MK 107 MKF 107 MKA 107 MKAF 107	4P
40	7210	37.00	1.00		
47	6100	31.28	1.10		
51	5650	29.00	1.25		
56	5130	26.32	1.40		
65	4410	22.62	1.65		
74	3850	19.74	1.85		
88	3260	16.75	2.2		
100	2850	14.63	2.4		
109	2620	13.43	1.65		
125	2280	11.73	1.90		
148	1940	9.94	2.2		
169	1690	8.69	2.4		
59	4820	24.75	0.90	MK 97 MKF 97 MKA 97 MKAF 97	4P
66	4360	22.37	1.00		
78	3690	18.96	1.15		
89	3230	16.56	1.35		
106	2700	13.85	1.60		
123	2340	11.99	1.65		
141	2030	10.41	1.40		
169	1700	8.71	1.55		
37KW					
23	15000	62.70	0.85	MK 127 MKF 127 MKA 127 MKAF 127	4P
27	13000	54.15	1.00		
31	11500	47.90	1.15		
37	9660	40.25	1.35		
41	8710	36.30	1.50		
47	7540	31.41	1.70		
53	6650	27.72	1.95		
62	5740	23.94	2.3		
70	5080	21.17	2.6		
83	4270	17.79	3.0		
102	3450	14.37	3.5		
115	3070	12.78	2.8		
137	2580	10.74	3.1		
169	2090	8.68	3.5		
40	8890	37.00	0.80	MK 107 MKF 107 MKA 107 MKAF 107	4P
47	7520	31.28	0.90		
51	6970	29.00	1.05		
56	6320	26.32	1.15		
65	5440	22.62	1.30		
74	4740	19.74	1.50		
88	4020	16.75	1.75		
100	3520	14.63	1.95		
109	3230	13.43	1.35		
125	2820	11.73	1.55		
148	2390	9.94	1.75		
169	2090	8.69	1.95		

Output speed (r/min)	Output torque (N.M)	Ratio (i)	Service Factor (fs)	Type	Motor Pole
45KW					
31	14000	47.90	0.95		
37	11700	40.25	1.10		
41	10600	36.30	1.25		
47	9170	31.41	1.40		
53	8090	27.72	1.60	MK 127	
62	6990	23.94	1.85	MKF 127	4P
70	6180	21.17	2.1	MKA 127	
83	5190	17.79	2.5	MKAF 127	
102	4190	14.37	2.9		
115	3740	12.78	2.3		
137	3140	10.74	2.5		
169	2540	8.68	2.8		
51	8480	29.00	0.85		
56	7690	26.32	0.95		
65	6610	22.62	1.10	MK 107	
74	5770	19.74	1.25	MKF 107	4P
88	4890	16.75	1.45	MKA 107	
100	4280	14.63	1.60	MKAF 107	
109	3930	13.43	1.10		
125	3430	11.73	1.25		
148	2910	9.94	1.45		
169	2540	8.69	1.60		
55KW					
37	14300	40.25	0.90		
47	11200	31.41	1.15		
53	9850	27.72	1.30		
62	8510	23.94	1.55	MK 127	
70	7530	21.17	1.75	MKF 127	4P
83	6330	17.79	2.0	MKA 127	
103	5110	14.37	2.4	MKAF 127	
115	4550	12.78	1.85		
137	3830	10.74	2.1		
170	3090	8.68	2.3		
75KW					
47	15200	31.41	0.85		
53	13400	27.72	0.95		
62	11600	23.94	1.10		
70	10200	21.17	1.25	MK 127	
83	8600	17.79	1.50	MKF 127	4P
103	6940	14.37	1.75	MKA 127	
116	6190	12.78	1.40	MKAF 127	
138	5200	10.74	1.55		
171	4200	8.68	1.70		
90KW					
62	13900	23.94	0.95		
70	12300	21.17	1.05	MK 127	
83	10300	17.79	1.25	MKF 127	
103	8330	14.37	1.45	MKA 127	4P
116	7420	12.78	1.15	MKAF 127	
138	6240	10.74	1.30		
171	5040	8.68	1.45		

MK37

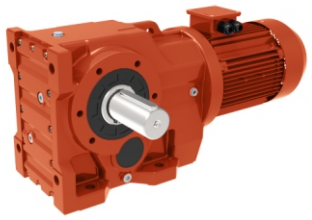

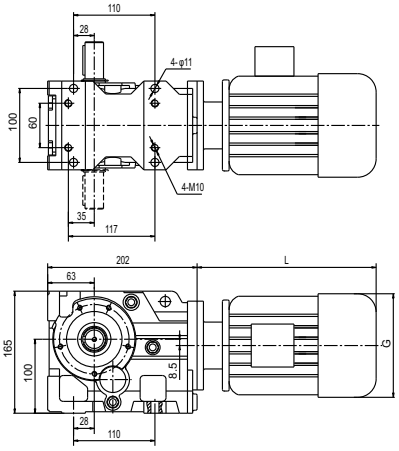

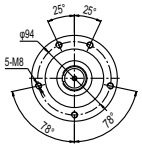

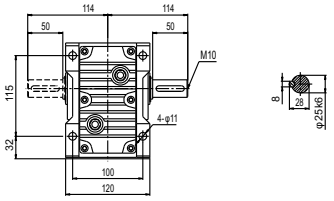

MKF37



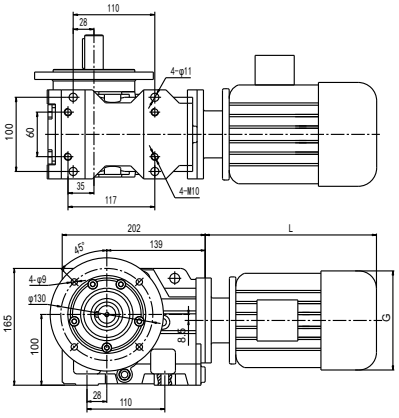

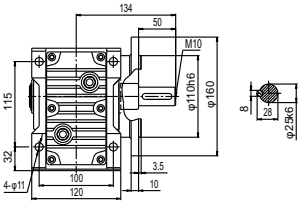

MKAF37



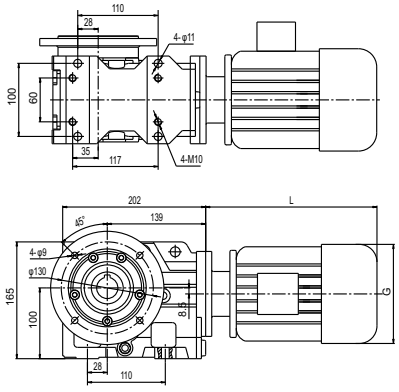

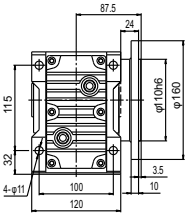

MKAZ37

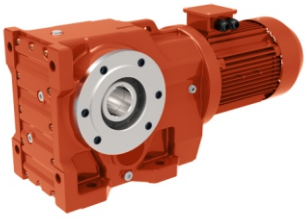

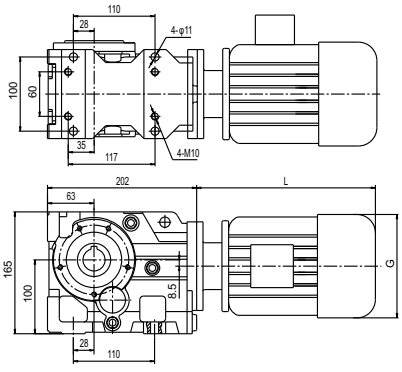

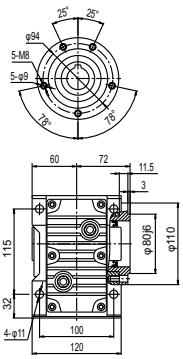

MKAB37



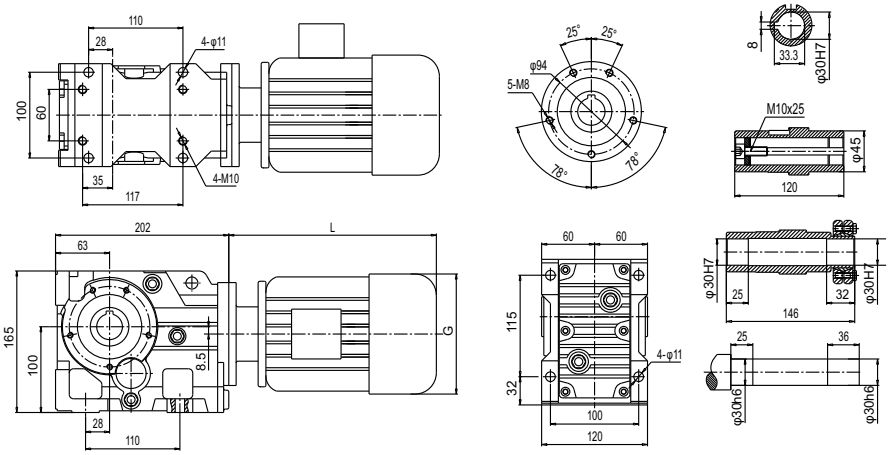

MKAT37

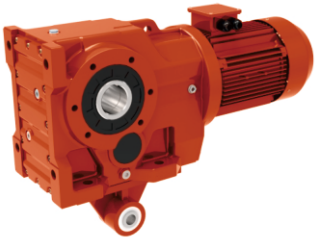

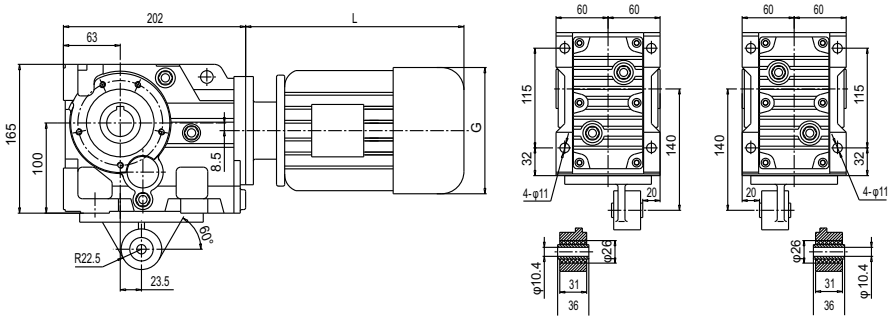

MK..S37



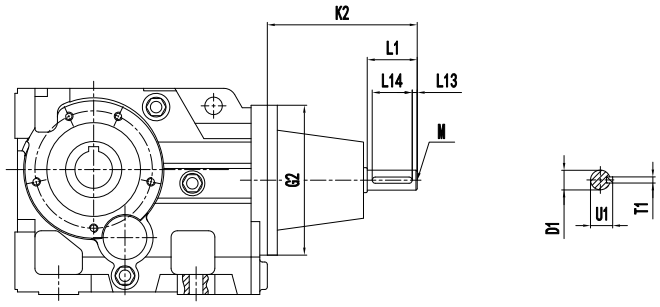

Input Shaft Kit	D1	G2	K2	L1	L13	L14	M	T1	U1
AD1 (Φ120)	Φ16k6	Φ120	102	40	4	32	M5	5	18
AD2 (Φ120)	Φ19k6		129	40	4	32	M6	6	21.5

MK47

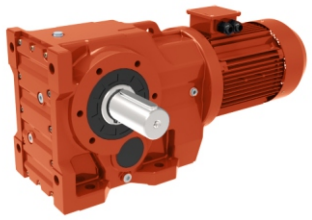

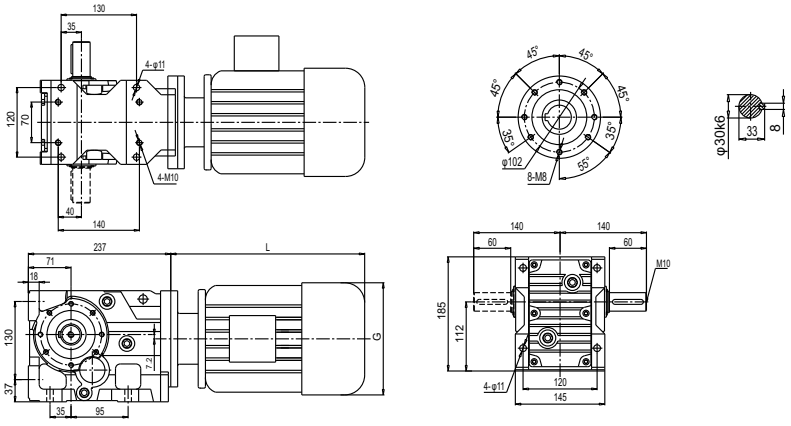

MKF47



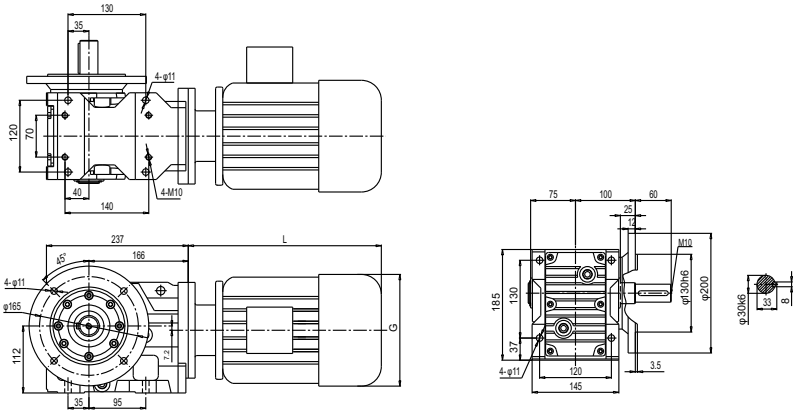

MKAF47



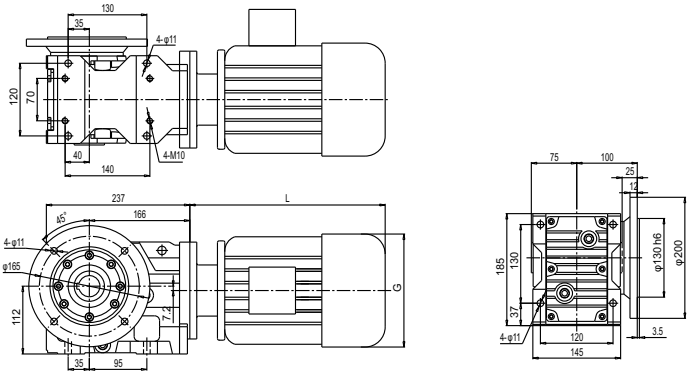

MKAZ47

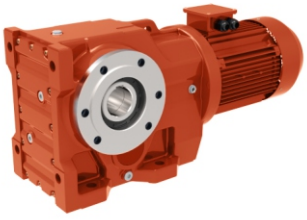

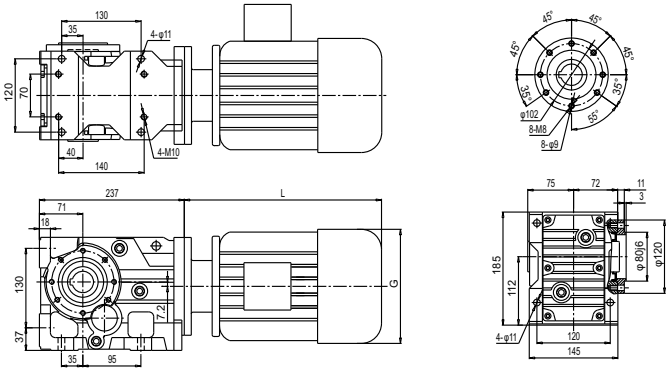

MKAB47



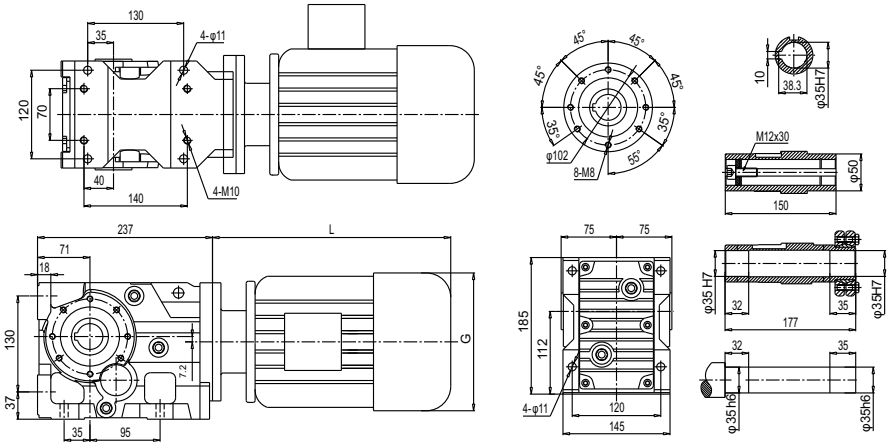

MKAT47

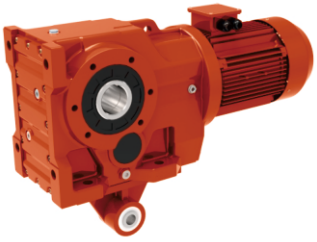

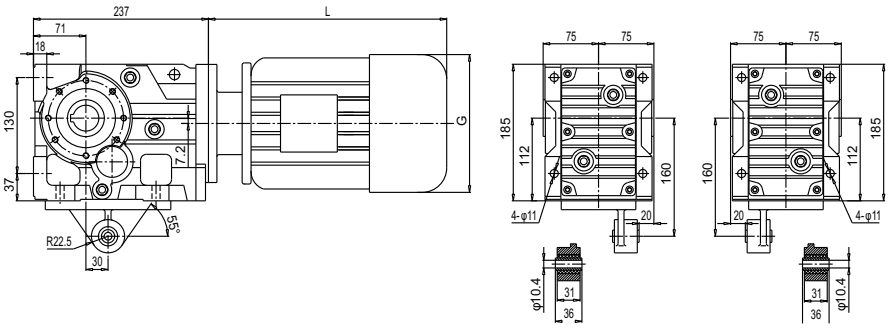

MK..S47



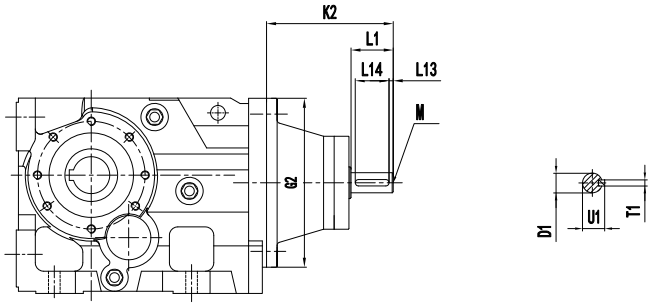

Input Shaft Kit	D1	G2	K2	L1	L13	L14	M	T1	U1
AD2 (Φ160)	Φ19k6	Φ160	123	40	4	32	M6	6	21.5
AD3 (Φ160)	Φ24k6		159	50	5	40	M8	8	27

MK67

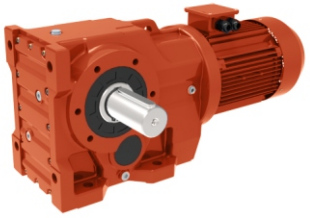

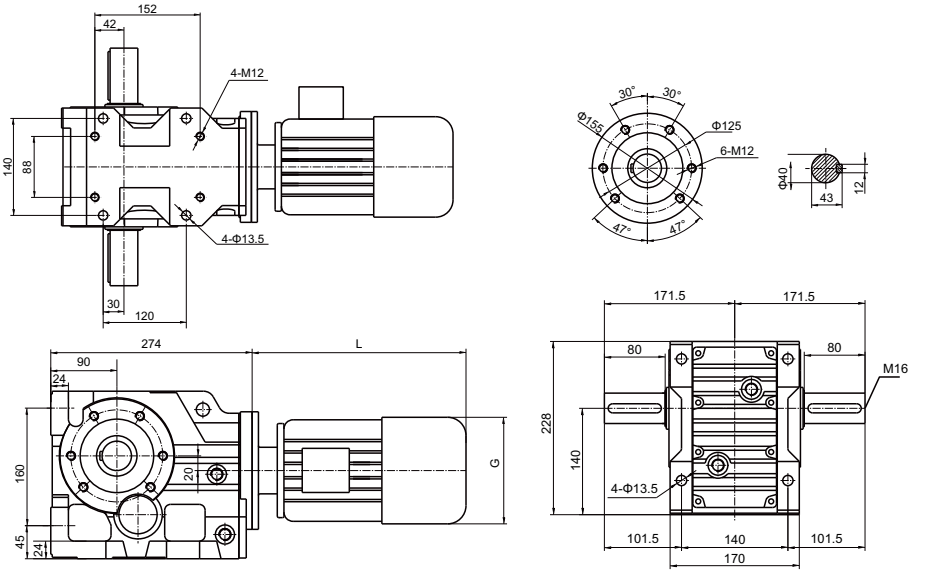

MKF67



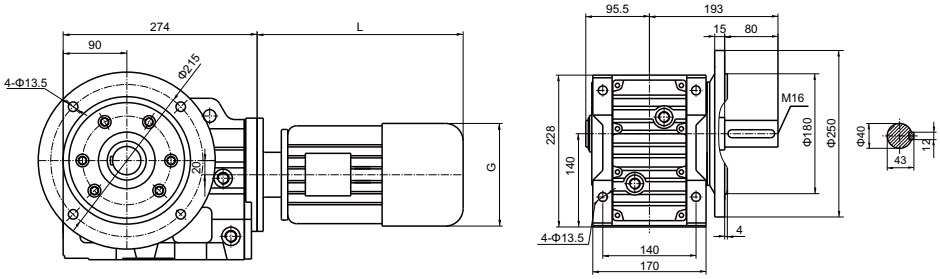

MKAF67



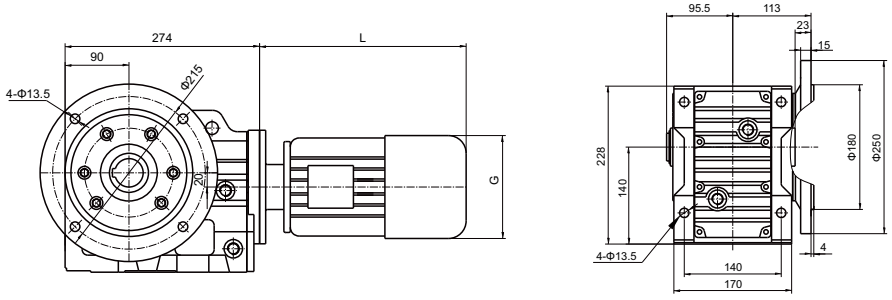

MKAZ67

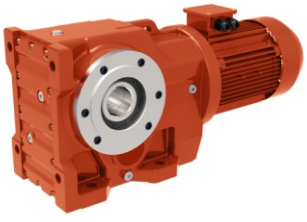

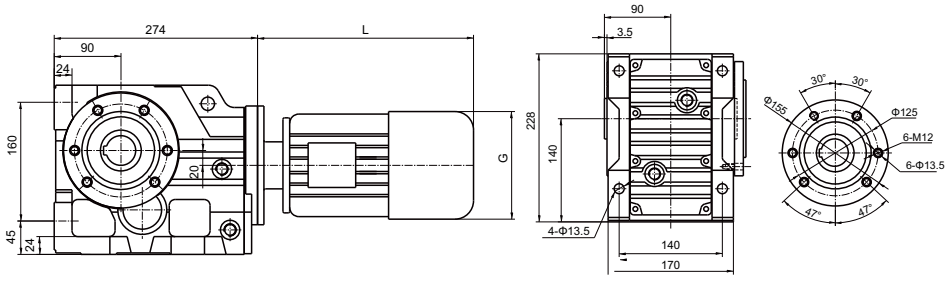

MKAB67



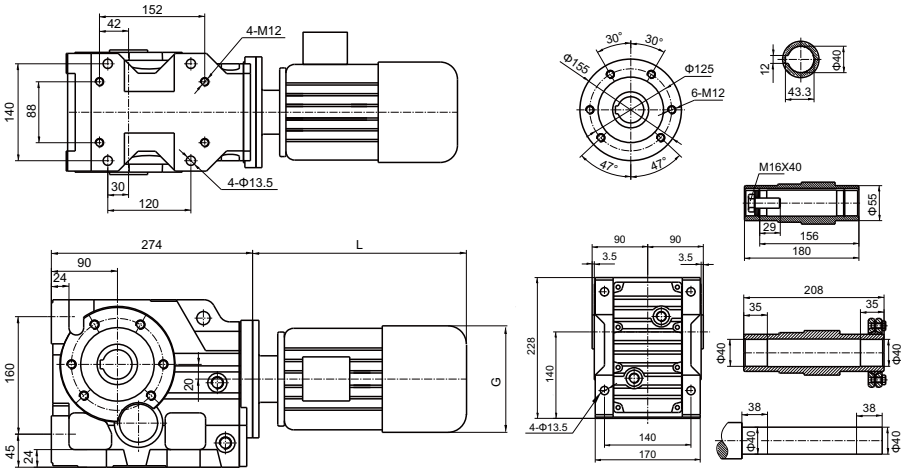

MKAT67

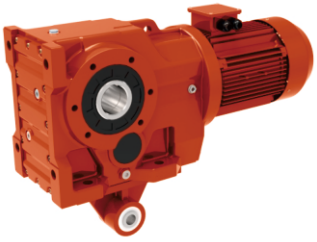

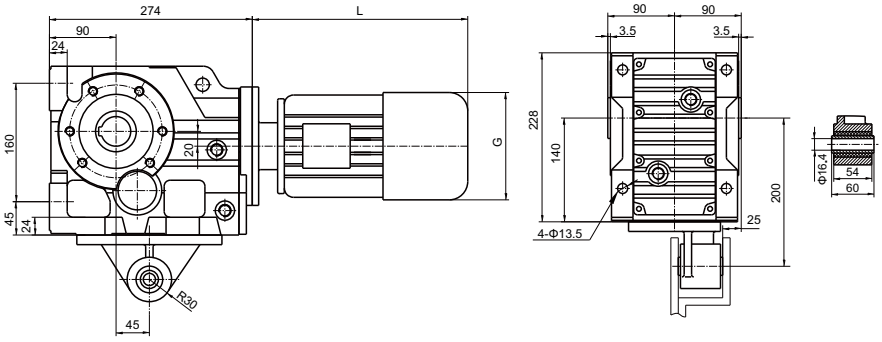

MK..S67

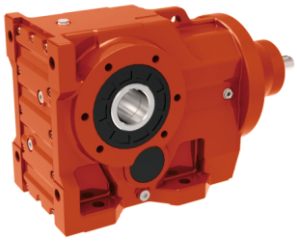

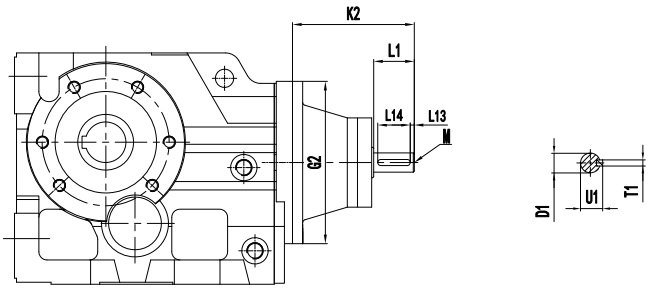

Input Shaft Kit	D1	G2	K2	L1	L13	L14	M	T1	U1
AD2 (Φ160)	Φ19k6	Φ160	123	40	4	32	M6	6	21.5
AD3 (Φ160)	Φ24k6		159	50	5	40	M8	8	27

MK77

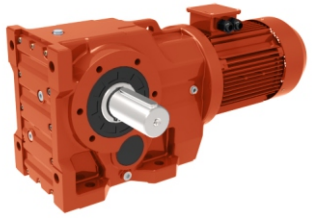

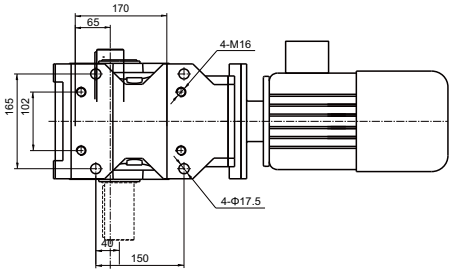

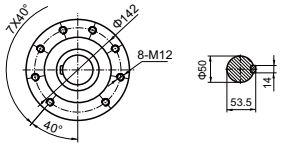

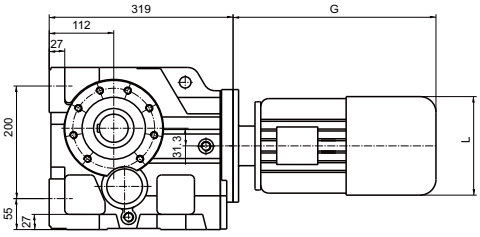

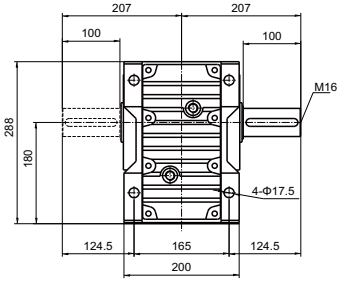

MKF77



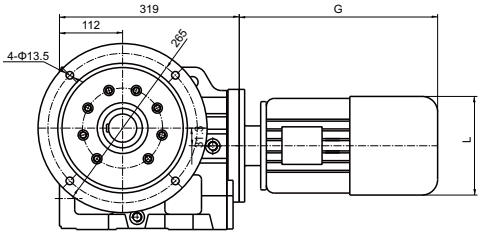

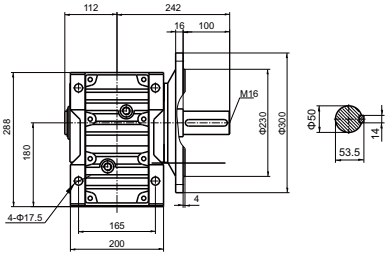

MKAF77



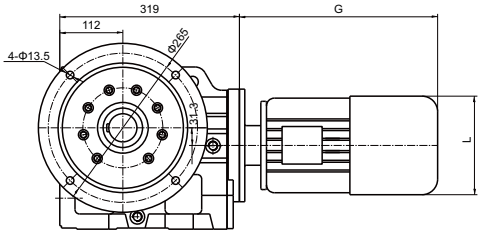

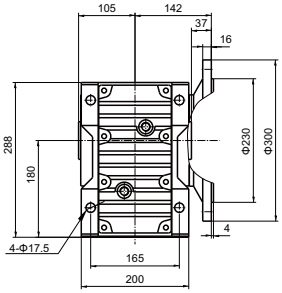

MKAZ77

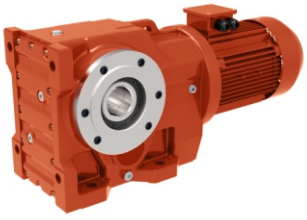

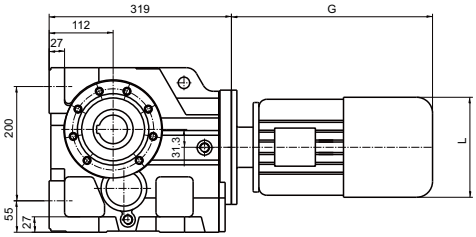

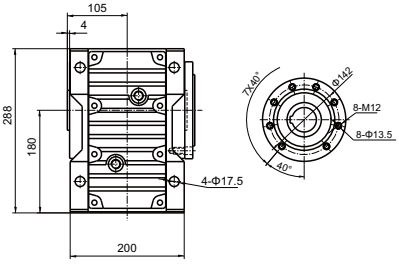

MKAB77



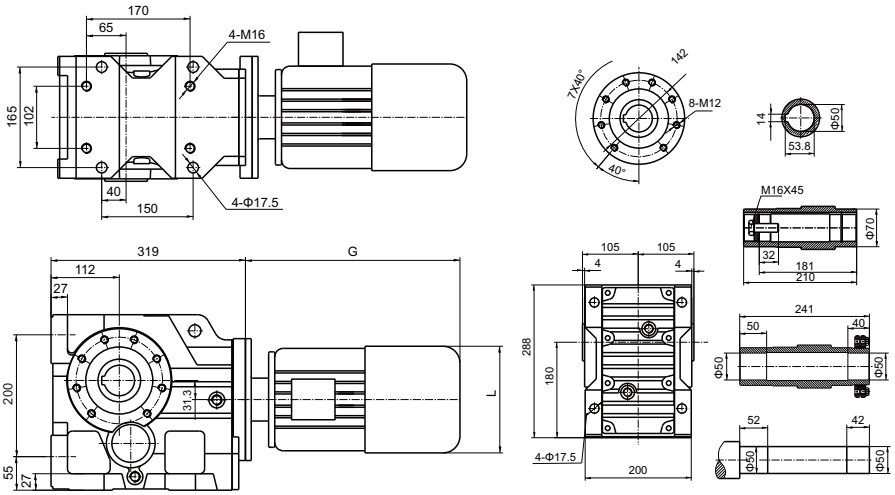

MKAT77

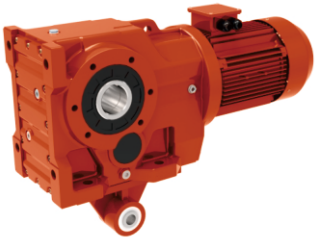

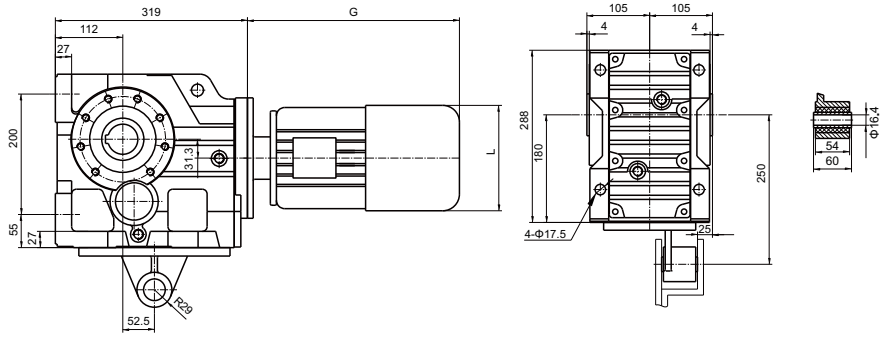

MK..S77

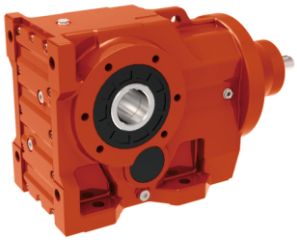

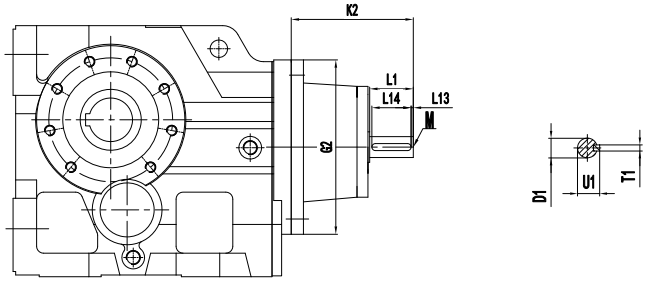

Input Shaft Kit	D1	G2	K2	L1	L13	L14	M	T1	U1
AD2 (Φ200)	Φ19k6	Φ200	115	40	4	32	M6	6	21.5
AD3 (Φ200)	Φ24k6		151	50	5	40	M8	8	27
AD4 (Φ200)	Φ38k6		224	80	7	70	M12	10	41

MK87

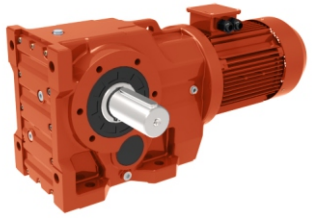

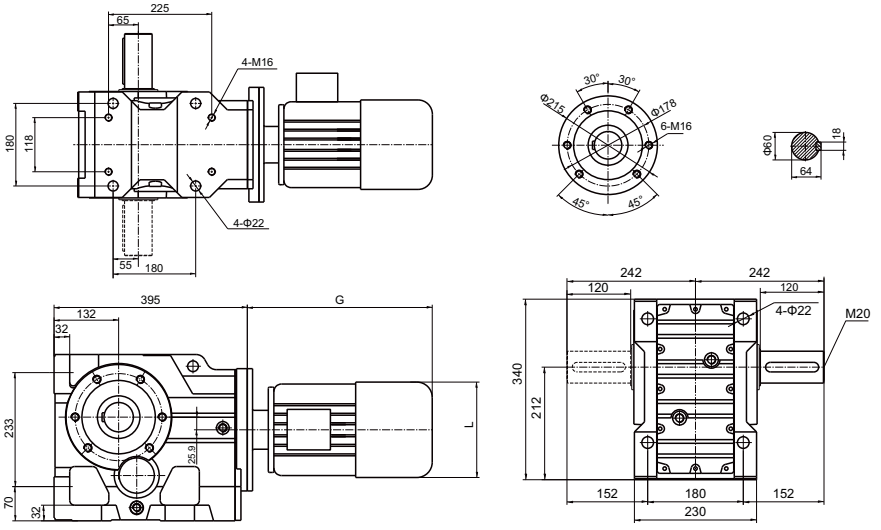

MKF87



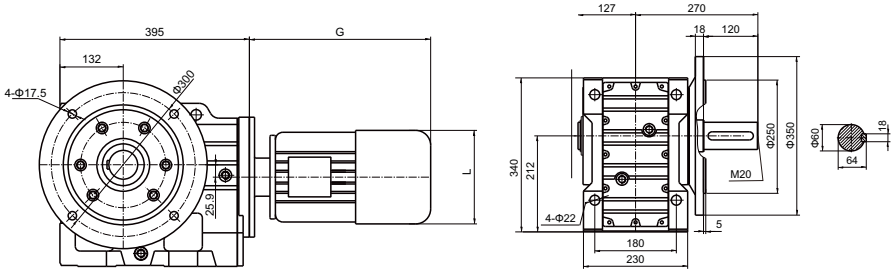

MKAF87



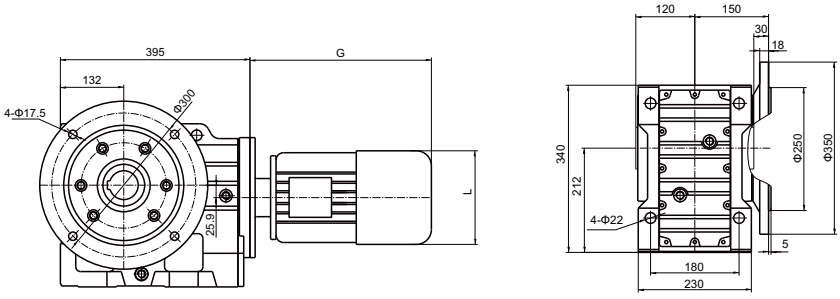

MKAZ87

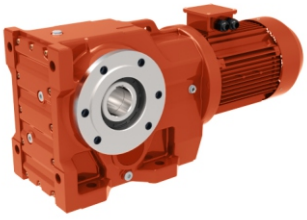

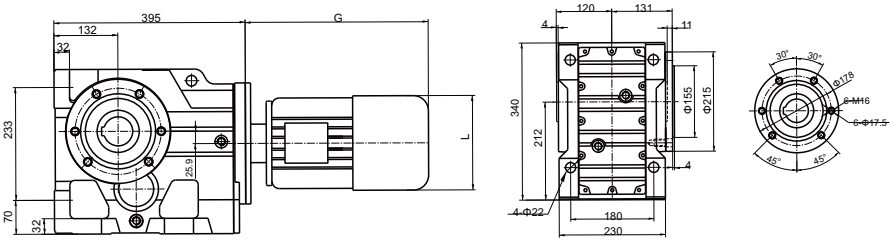

MKAB87



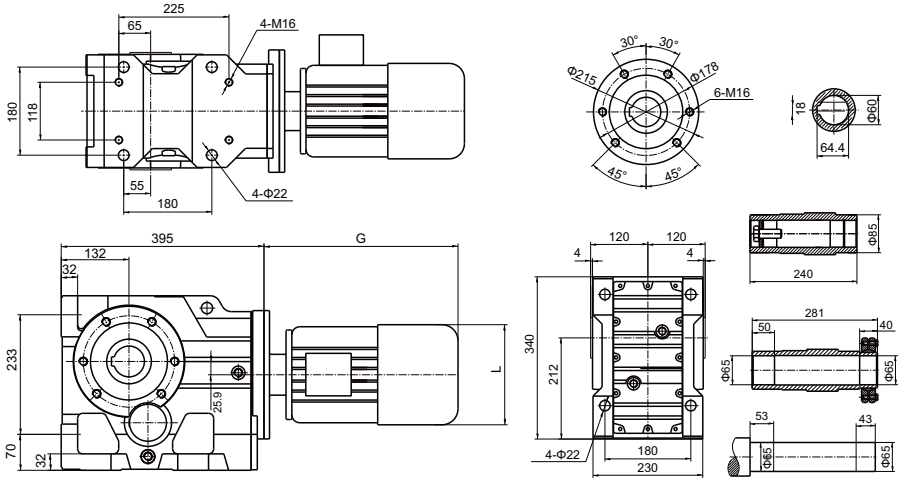

MKAT87

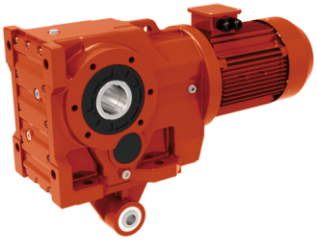

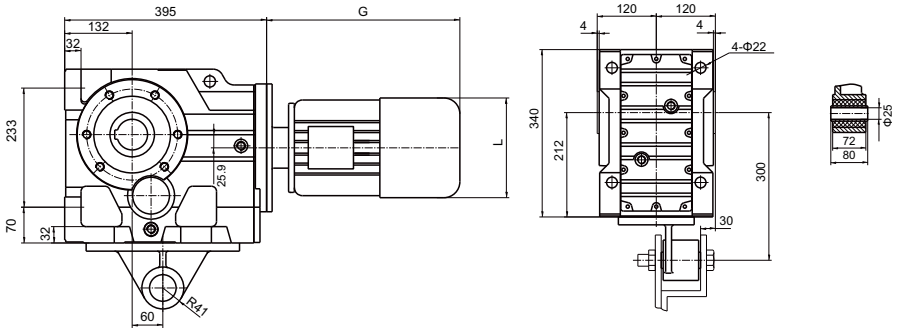

MK..S87



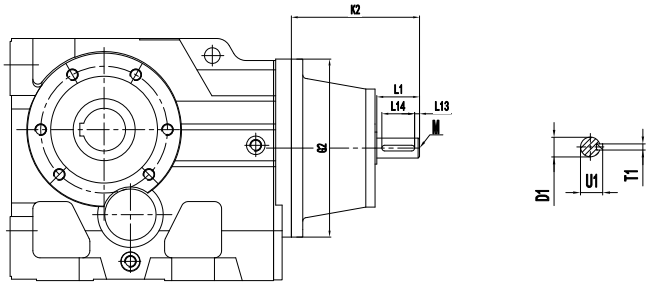

Input Shaft Kit	D1	G2	K2	L1	L13	L14	M	T1	U1
AD2 (Φ250)	Φ19k6	Φ250	110	40	4	32	M6	6	21.5
AD3 (Φ250)	Φ28k6		156	60	5	50	M10	8	31
AD4 (Φ250)	Φ38k6		219	80	7	70	M12	10	41
AD5 (Φ250)	Φ42k6		292	110	10	70	M16	12	45

MK97

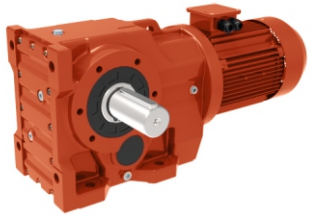

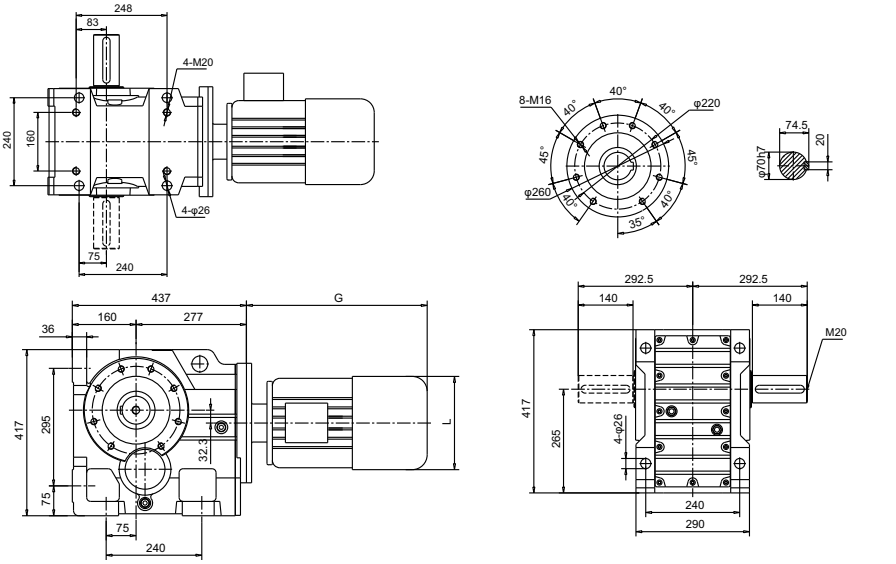

MKF97



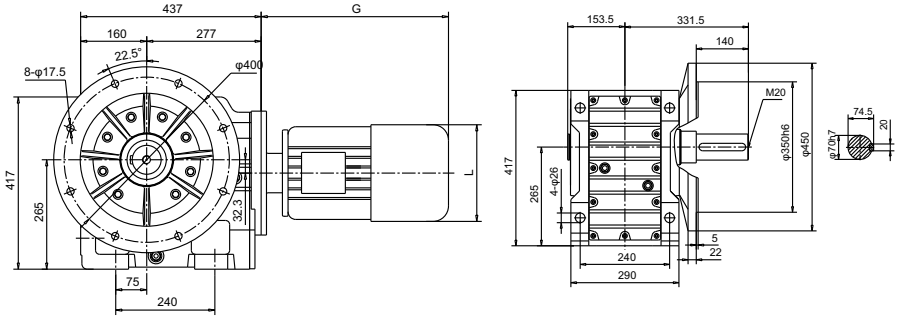

MKAF97



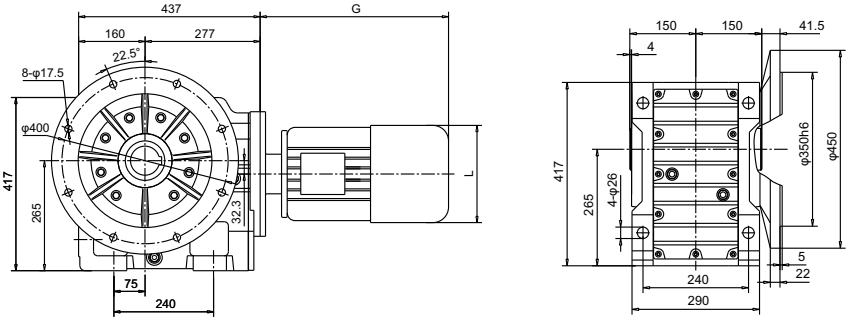

MKAZ97

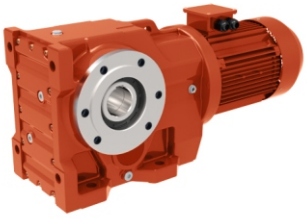

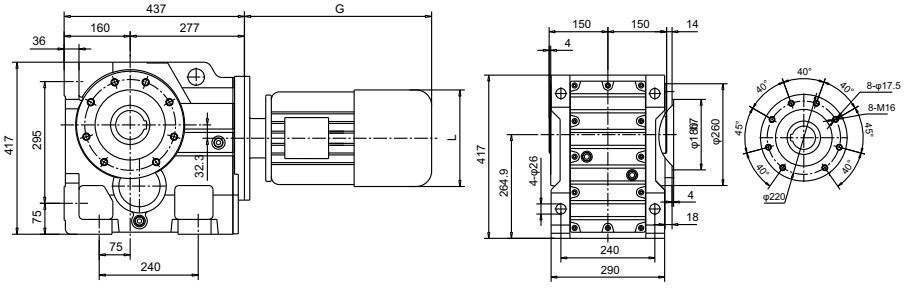

MKAB97



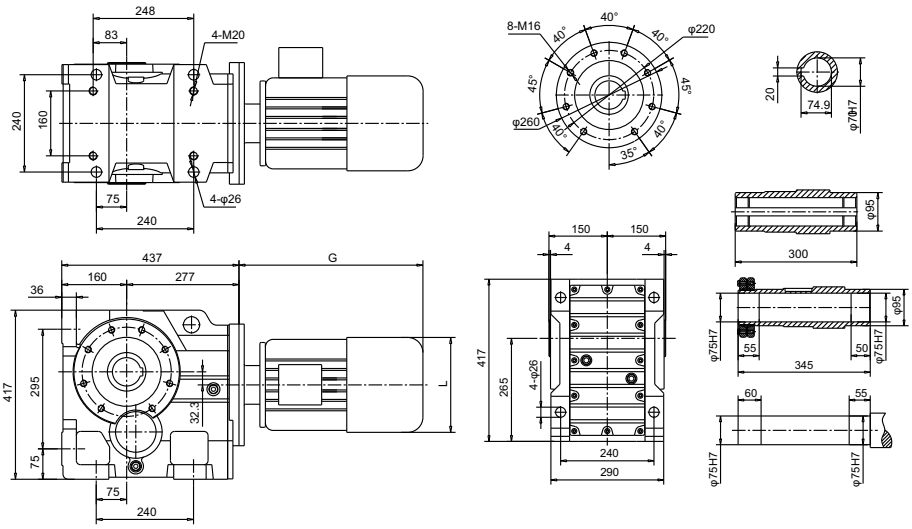

MKAT97

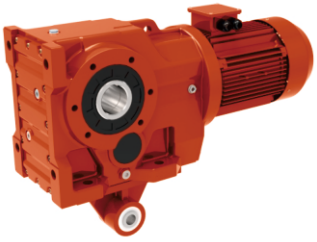

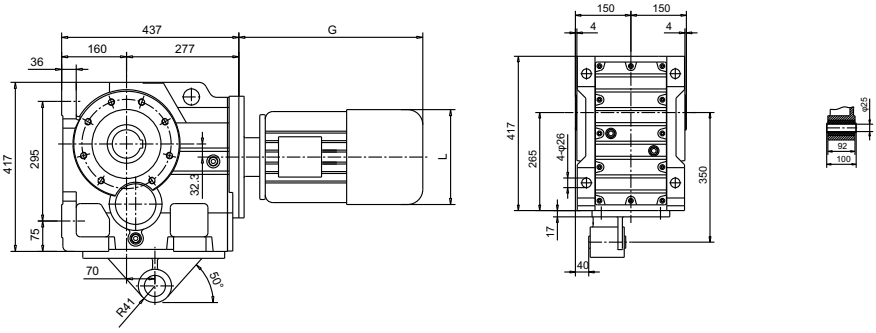

MK..S97

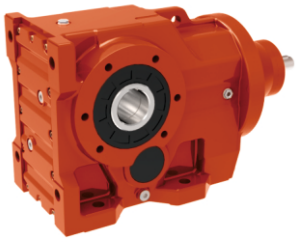

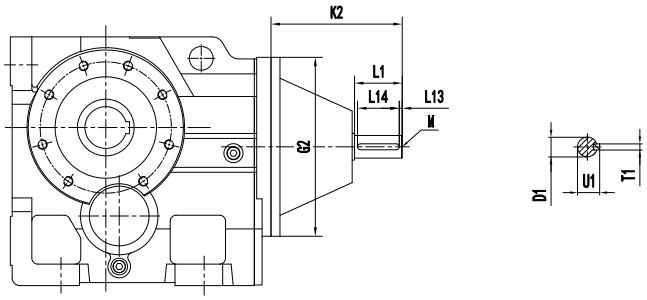

Input Shaft Kit	D1	G2	K2	L1	L13	L14	M	T1	U1
AD3 (Φ300)	Φ28k6	Φ300	151	60	5	50	M10	8	31
AD4 (Φ300)	Φ38k6		214	80	7	70	M12	10	41
AD5 (Φ300)	Φ42k6		287	110	10	70	M16	12	45
AD6 (Φ300)	Φ48k6		327	110	10	80	M16	14	51.5

MK107

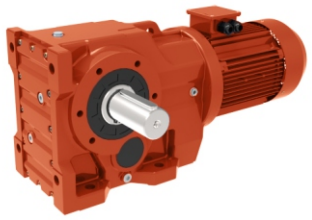

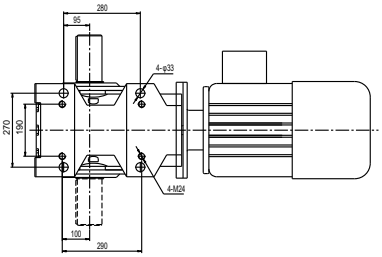

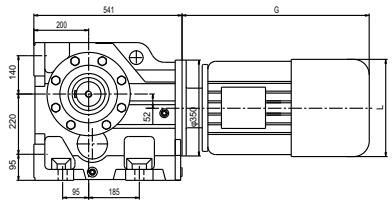

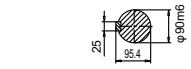

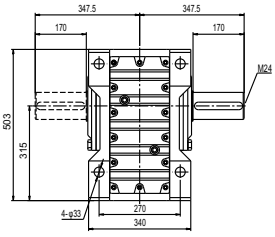

MKF107



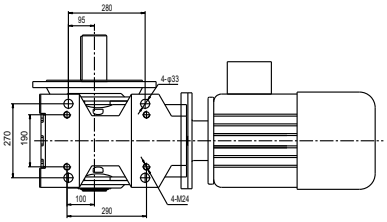

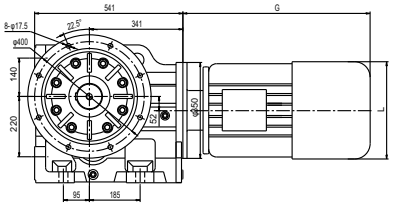



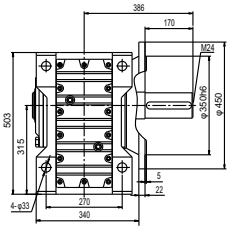

MKAF107



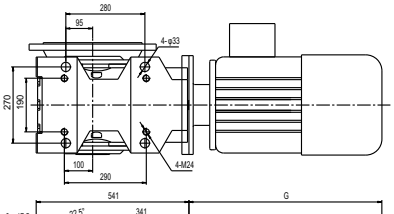

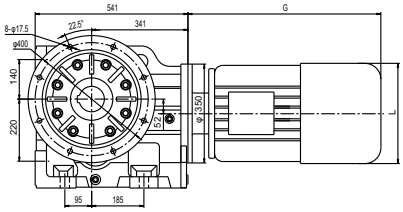

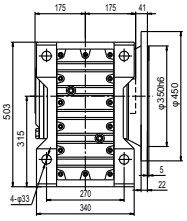

MKAZ107

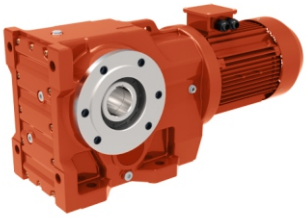

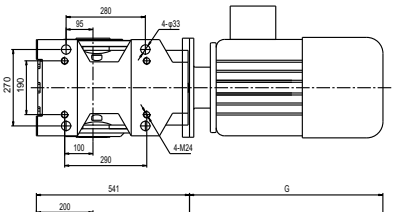

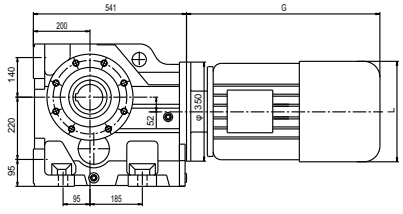



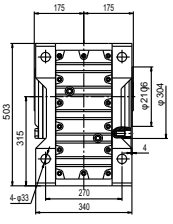

MKAB107



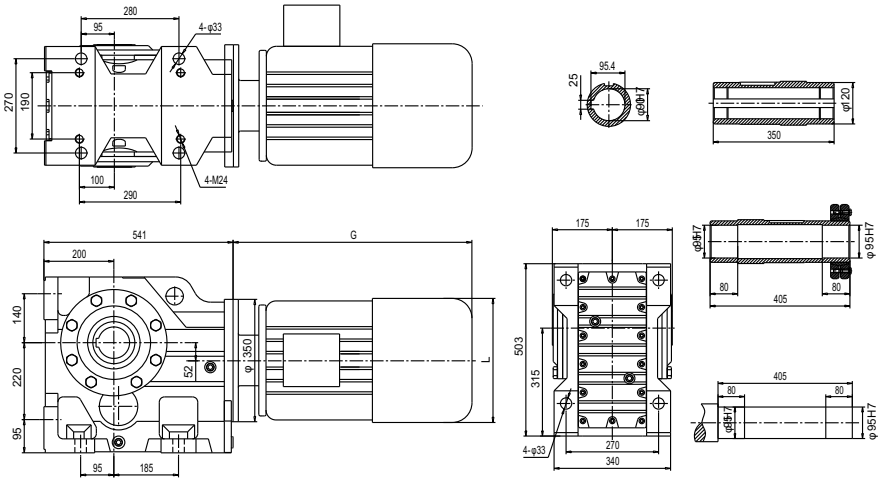

MKAT107

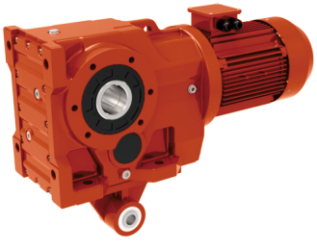

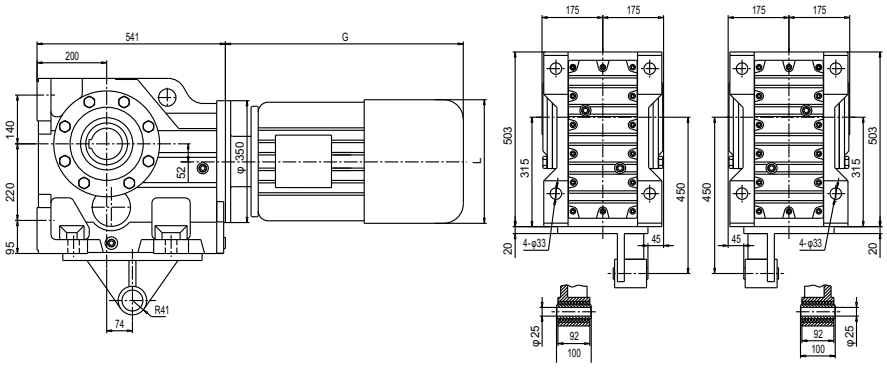

MK..S107

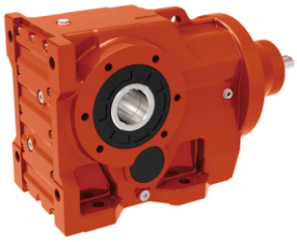

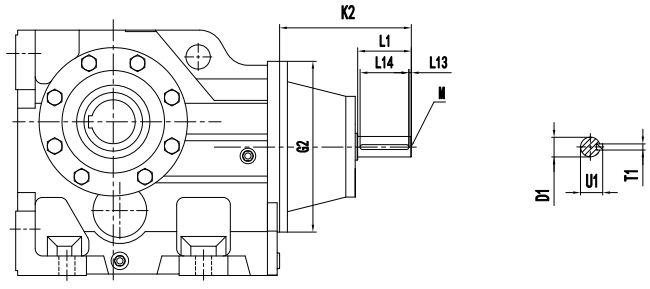

Input Shaft Kit	D1	G2	K2	L1	L13	L14	M	T1	U1
AD3 (Φ350)	Φ28k6	Φ350	145	60	5	50	M10	8	31
AD4 (Φ350)	Φ38k6		208	80	7	70	M12	10	41
AD5 (Φ350)	Φ42k6		281	110	10	70	M16	12	45
AD6 (Φ350)	Φ48k6		321	110	10	80	M16	14	51.5

MK127

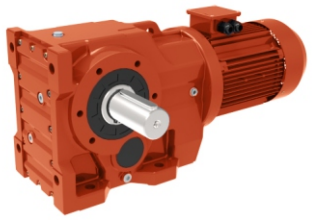

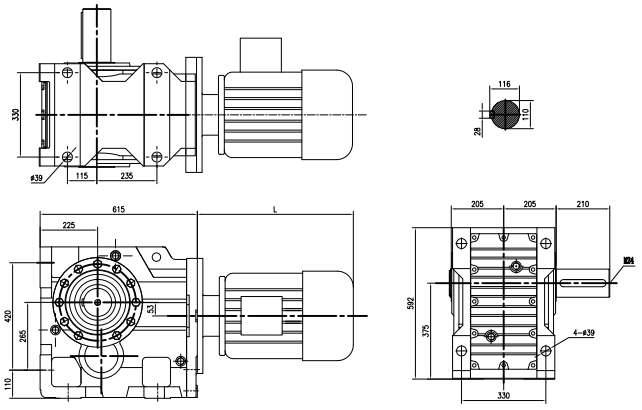

MKF127



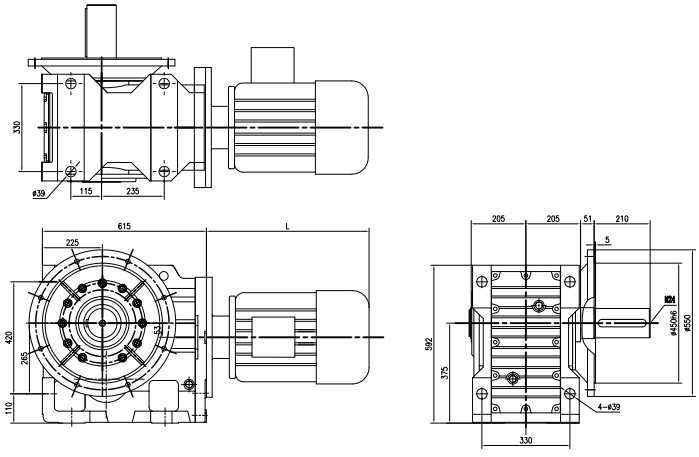

MKAF127



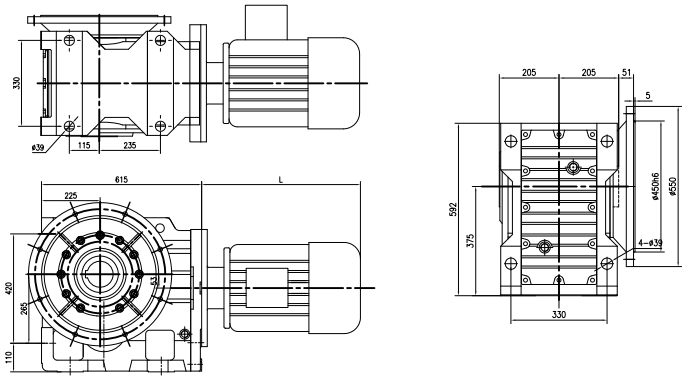

MKAZ127

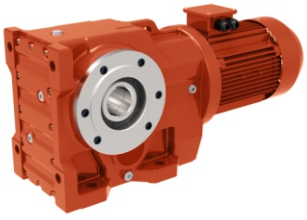

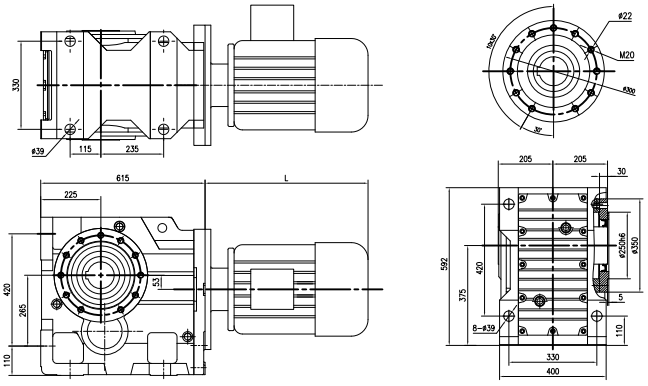

MKAB127



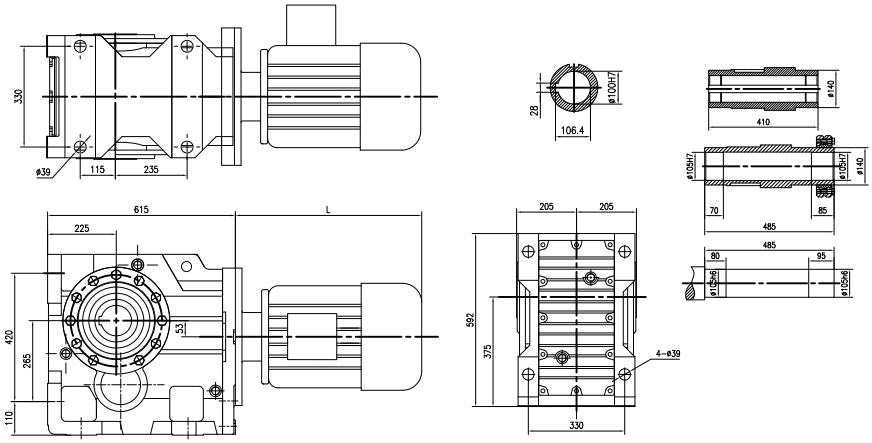

MKAT127

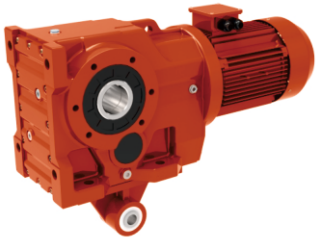

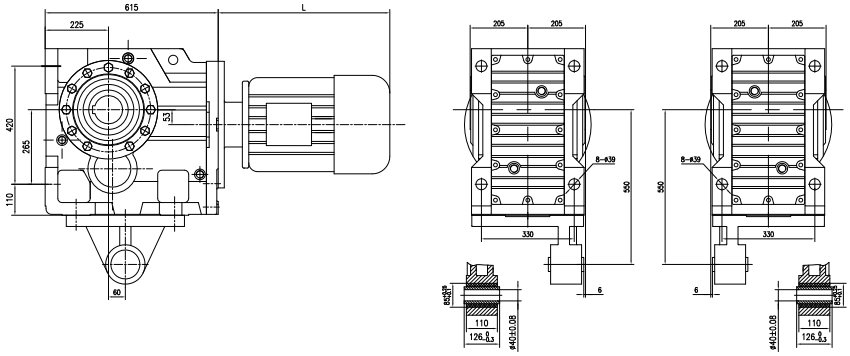

MK..S127

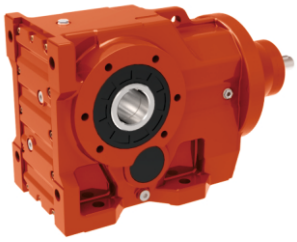

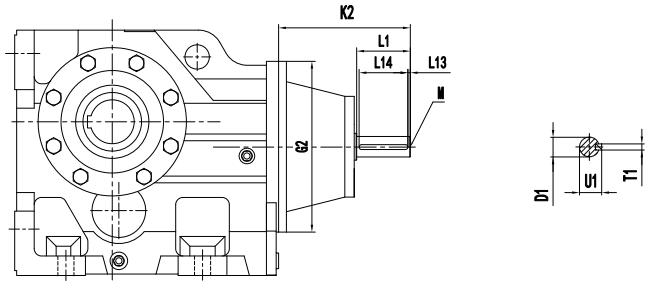

Input Shaft Kit	D1	G2	K2	L1	L13	L14	M	T1	U1
AD4 (Φ450)	Φ38k6	Φ450	193	80	7	70	M12	10	41
AD5 (Φ450)	Φ42k6		266	110	10	70	M16	12	45
AD6 (Φ450)	Φ48k6		306	110	10	80	M16	14	51.5
AD7 (Φ450)	Φ55m6		300	110	10	90	M20	16	59
AD8 (Φ450)	Φ70m6		383	140	15	110	M20	20	74.5

Accessories Of MKA Series Assembly Instruction

Output Flange Assembly

1. Remove oil seal from output flange.(Chart a ①)
2. Fit oil seal onto the output flange.(Chart b ②)

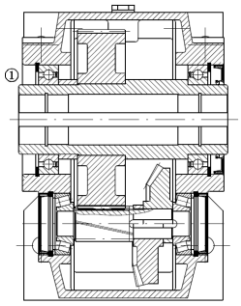

Chart a

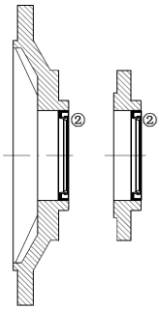

Chart b

3. Put sealing paper on output flange.(Chart c ③)
4. Fit output flange on housing,then tighten the screws.(Chart d ④)

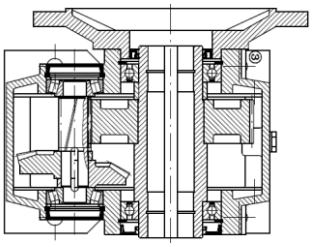

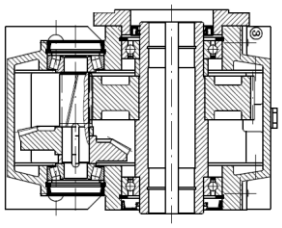

Chart c

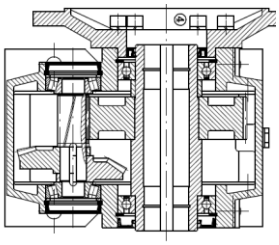

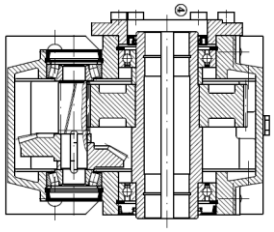

Chart d

Accessories Of MKA Series Assembly Instruction

Output Shaft Assembly:

1. Fit key into output shaft.(Chart e ①)
2. Fit shaft circlip onto output shaft.(Chart e ②)
3. Fit output shaft into hollow shaft ,then fit shaft circlip at the end of output shaft.(Chart f ③)

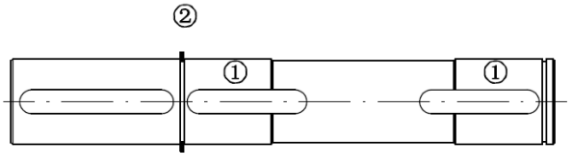

Chart e

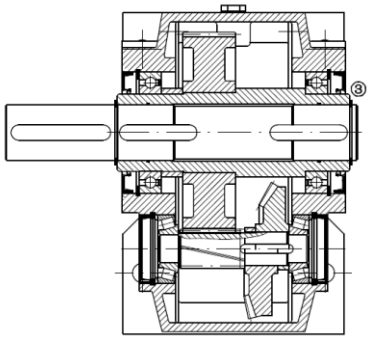

Chart f

MKA Series Installation Direction Diagram

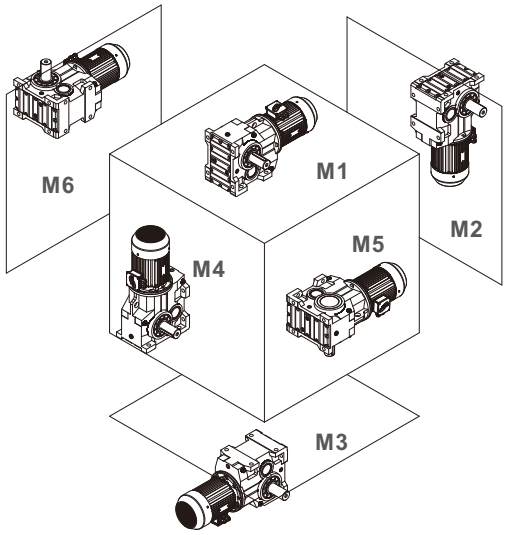

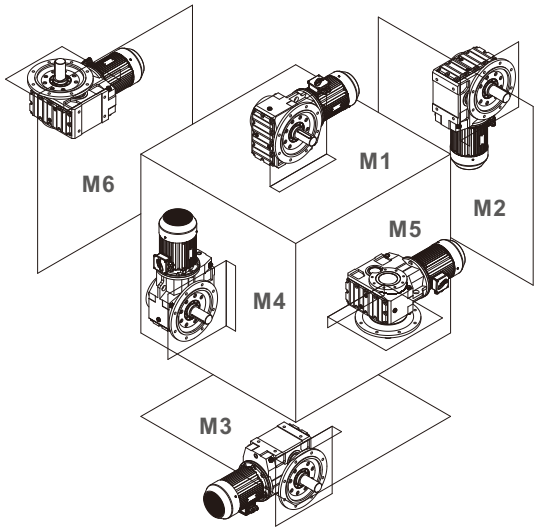

MKA Series Oil Capacity Table (Unit:L)

Models \ Mounting Position	M1	M2	M3	M4	M5	M6
MKA37	0.75	0.85	0.65	1.1	1	1
MKA47	1.2	0.9	1	1.9	1.3	1.3
MKA67	1.75	2.5	1.8	3	2.6	2.6
MKA77	3.5	3.7	2.9	5.8	4.5	4.5
MKA87	6.8	6.7	4.6	10	7.8	7.8
MKA97	12	13.5	8.9	19	16	16
MKA107	17	20	16	31	24	24
MKA127	29	41.5	34	54	48	45

MK/MKAB37-127 Mounting Position Example

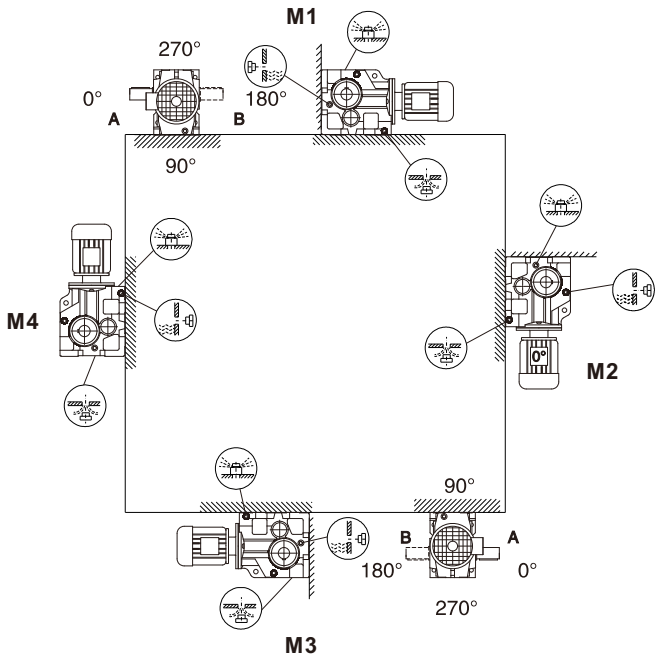

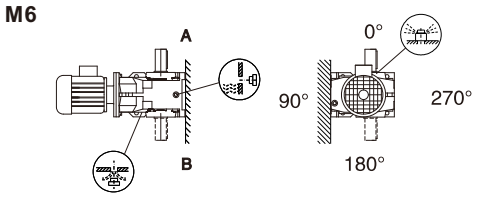

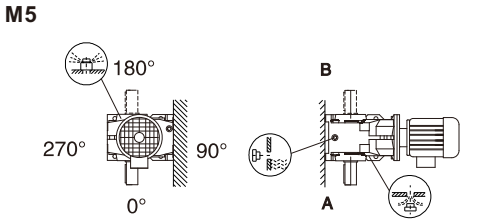

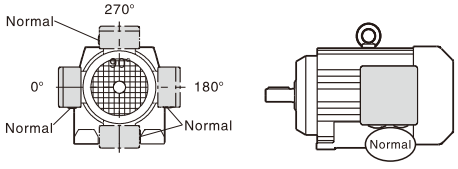

MKAT37-127 Mounting Position Example

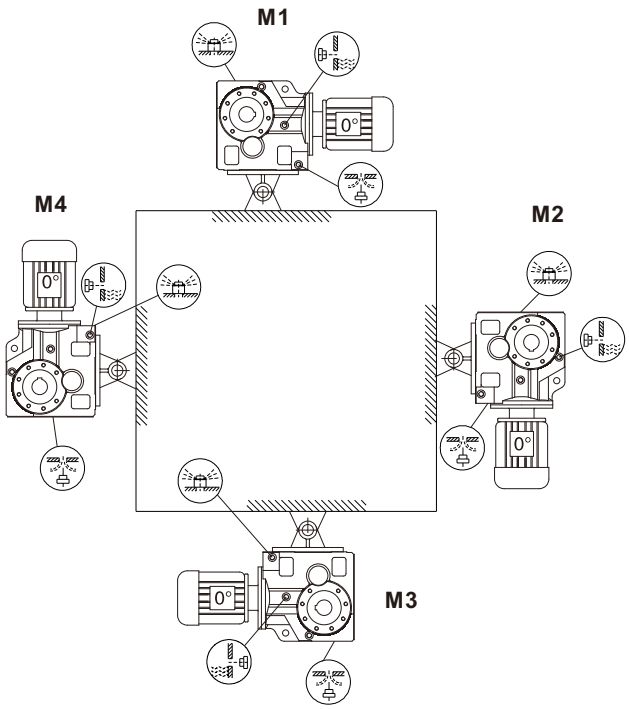

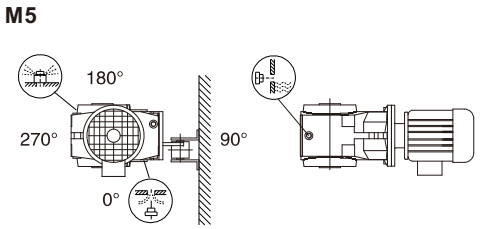

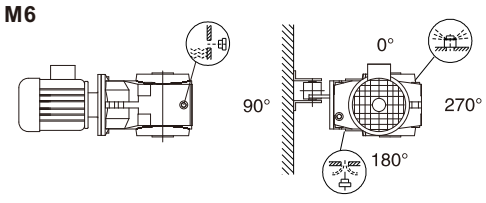

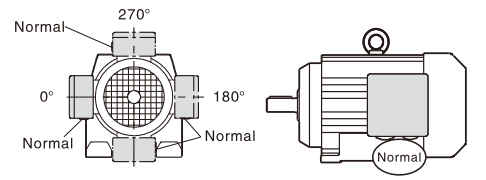

MKF/MKAF37-127 Mounting Position Example

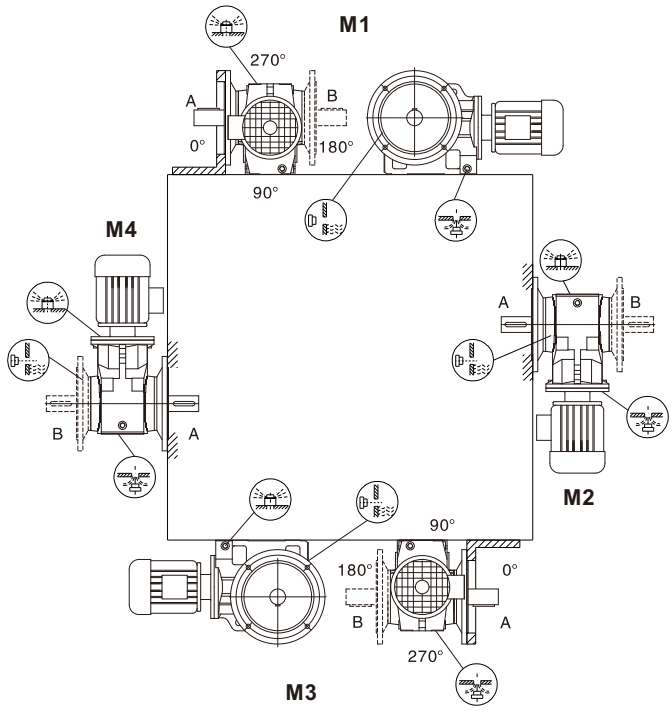

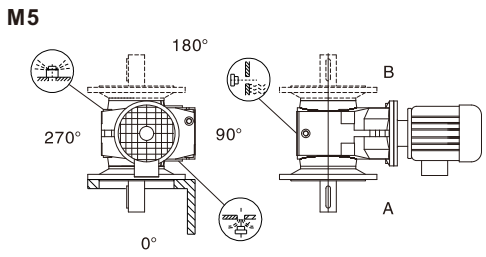

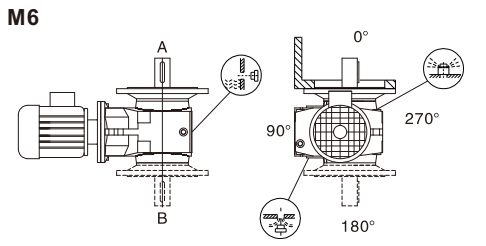

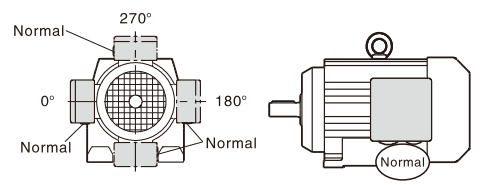

MFA Series

Modular Helical Gearbox

- Based on design of the traditional helical gearbox , as well as to meet strong market demand, WUMA combines the European advanced technical experience, after three years reserch and development, MFA series modular gearbox access to market successfully.



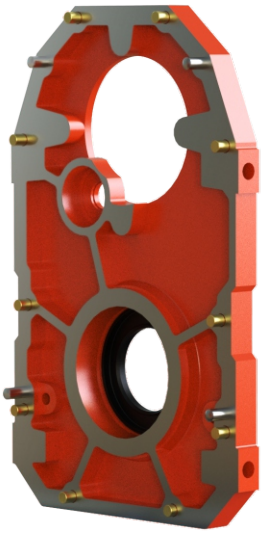



Characteristics

- Saving the inventory investment and warehouse space.
- High transmisson efficiency, the single machine can reach as much as 96%.
- Modularity allows distributors creat any new ratio quickly and flexiblyby themselves to shorten the lead time greatly.
- Modular design can provide various kinds of ratio combination only through the simple transformation of high speed gears.

The Product Structure



MFA Series



MFAZ Series

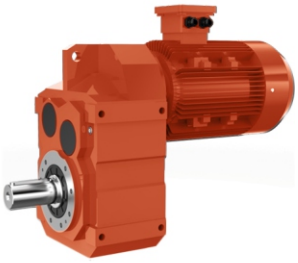

MF Series

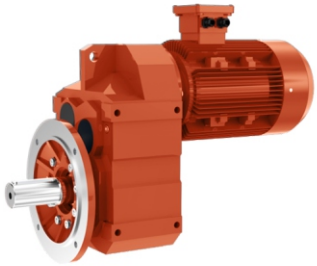

MFF Series



MFAF Series



MF..S Series



MFA..Series with input flange

Working Environment

- Without industry limitation.
- Suitable for normal-reverse rotation.
- The working place should be lower than 1,000 meters above sea-level.
- Please consult our technical supporting deparment for other circumstances.
- Working temperature:-40℃~50℃（The lubrication should be heated until above 0℃ if temperature below 0℃.）
- The input speed should be less than 3,000 r/m,the circumferential speed of the gear should not exceed 20m/s.

Product Disassembly Graph

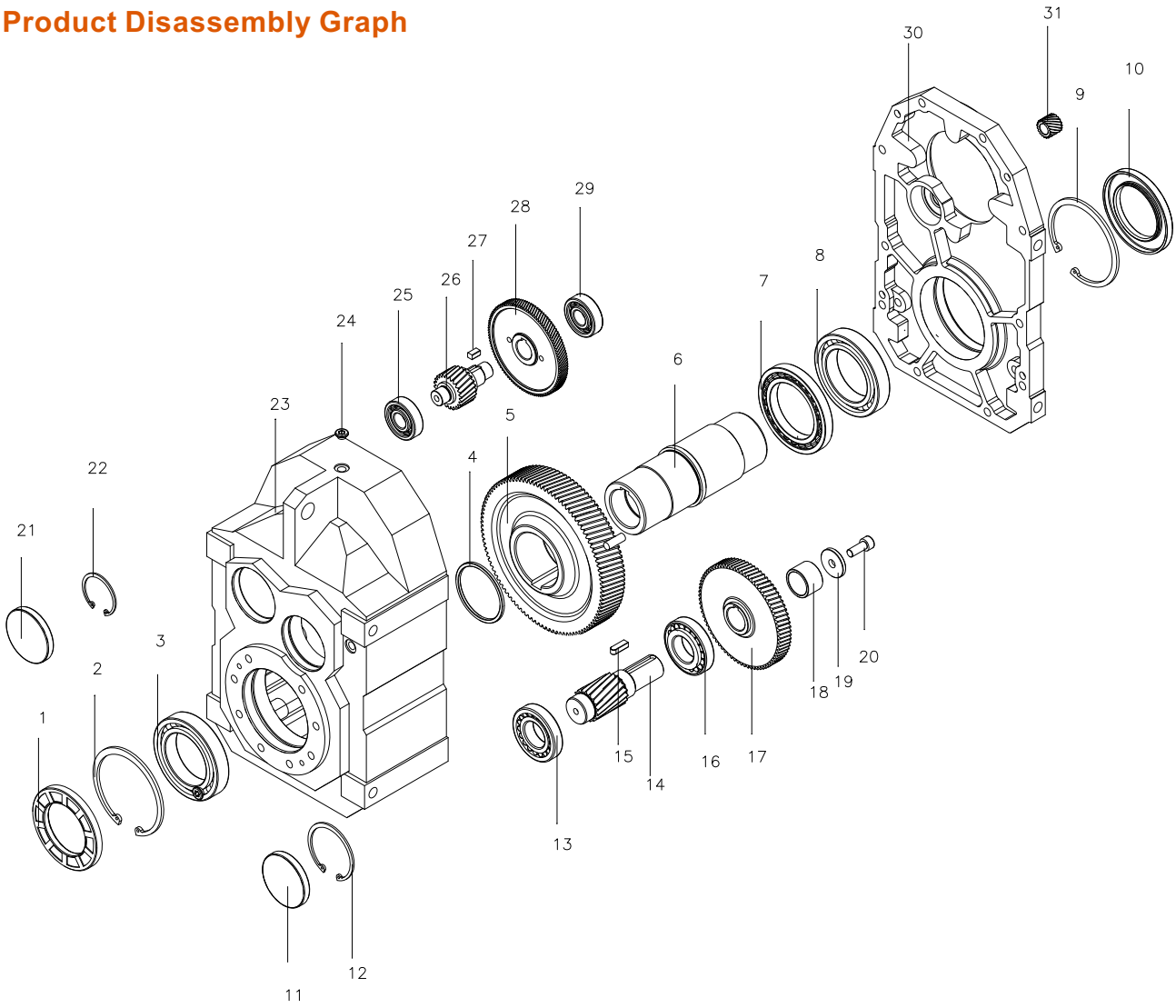

1. Oil seal
2. Circlip for hole
3. Bearing
4. Distance Ring
5. Third-stage gear
6. Hollow output shaft
7. Bearing
8. Bearing
9. Circlip for hole
10. Oil seal
11. Seal Cover
12. Circlip hole use
13. Bearing
14. Third-stage gear shaft
15. Key
16. Bearing
17. Second-stage gear
18. Distance Ring
19. Circlip
20. Screws
21. Seal Cover
22. Circlip for hole
23. Housing A
24. Oil plug
25. Bearing
26. Second-stage gear shaft
27. Key
28. First-stage gear
29. Bearing
30. Housing B
31. First-stage small gear

WMFA37 RATIO MATCH TABLE

Motor power range(KW)	Ratio	First stage-small gear	63 type	71 type	80 type	90 type	100 type	First stage-big gear	Second stage-gear and gear shaft	Basic Modular
0.12-0.18	128.51	X1014	10					D0411014058	ZF37-14.1(80/13) / F36-13.1(13/80)	C
0.12-0.18	117.88	X1015	10					D0411015057		
0.12-0.25	100.36	X1017	10	10				D0411017055		
0.12-0.25	86.53	X1019	10	10				D0411019053		
0.12-0.37	80.65	X1020	10	10				D0411020052		
0.12-0.37	70.50	X1022	10	10				D0411022050		
0.12-0.37	66.09	X1023	10	10				D0411023049		
0.12-0.37	58.32	X1025	10	10				D0411025047		
0.12-0.55	51.70	X1027	10	10	12			D0411027045		
0.12-0.55	54.54	X1017	10	10	12			D0411017055	ZF37-14.2(59/19) / F36-13.2(19/59)	
0.12-0.55	47.02	X1019	10	10	12			D0411019053		
0.12-0.55	43.83	X1020	10	10	12			D0411020052		
0.12-0.75	38.31	X1022	10	10	12			D0411022050		
0.12-0.75	35.91	X1023	10	10	12			D0411023049		
0.12-0.75	31.69	X1025	10	10	12			D0411025047		
0.12-1.1	28.10	X1027	10	10	12	14		D0411027045		
0.12-1.1	23.88	X1224	10	10	12	14		D0411224034		
0.12-0.75	23.63	X1017	10	10	12			D0521017074	/	
0.12-1.5	20.57	X1019	10	10	12	14		D0521019072		
0.12-1.5	19.27	X1020	10	10	12	14		D0521020071		
0.12-1.5	17.03	X1022	10	10	12	14		D0521022069		
0.12-0.55	15.81	X1023	10	10	12			D0521023067		
0.12-2.2	14.33	X1025	10	10	12	14	16	D0521025066		
0.12-2.2	12.87	X1027	10	10	12	14	16	D0521027064		
0.12-2.2	11.08	X1224	10	10	12	14	16	D0521224049		
0.12-2.2	10.42	X1225	10	10	12	14	16	D0521225048		
0.12-3.0	8.97	X1523	10	10	12	14	16	D0521523038		
0.55-3.0	8.01	X1721			12	14	16	D0521721031		
0.12-0.55	7.44	X1023	10	10	12			D0521023067		D
0.12-3.0	6.74	X1025	10	10	12	14	16	D0521025066		
0.12-3.0	6.05	X1027	10	10	12	14	16	D0521027064		
0.12-3.0	5.21	X1224	10	10	12	14	16	D0521224049		
0.12-3.0	4.90	X1225	10	10	12	14	16	D0521225048		
0.12-3.0	4.22	X1523	10	10	12	14	16	D0521523038		
0.55-3.0	3.77	X1721			12	14	16	D0521721031		

Selection of instruction:

1. The basic gearboxes=E+X+A+C, or F+Y+B+C, or G+Z+C,or H+V+D (with extra IEC input flange)

E+X+A+C,collocate ratio from 51.7 to 128.51
F+Y+B+C,collocate ratio from 23.88 to 54.5
G+Z+C,collocate ratio from 8.01 to 23.63
H+V+D,collocate ratio from 3.77 to 7.44

2. E.g: if you need to collocate ratio 14.33,you should choose basic modular C
with First stage-small gear G(X1025) and first stage big gear Z(D0521025066)
if you need to collocate ratio to 70.5,you should choose basic modular C
with Second stage gear shaft ZF37-13.1(80/13) and Second stage gear F36-13.1(13/80)
and First stage-small gear E(X1022) with first stage big gear X(D0411022050)

3. Diameter of first stage-small gear depends on motor size.

WMFA47 RATIO MATCH TABLE

Motor power range(KW)	Ratio	First stage-small gear	63 type	71 type	80 type	90 type	100 type	First stage-big gear	Second stage-gear and gear shaft	Basic Modular
0.12-0.25	190.76	X1014	10	10				D0461014067	ZR56-14.1(76/13) /R56-13.1(13/76)	C
0.12-0.25	175.38	X1015	10	10				D0461015066		
0.12-0.37	150.06	X1017	10	10				D0461017064		
0.12-0.37	130.07	X1019	10	10				D0461019062		
0.18-0.55	121.57	X1020	10	10	12			D0461020061		
0.37-0.55	105.09	X1022		10	12			D0461022058		
0.37-0.55	89.29	X1025		10	12			D0461025056		
0.37-0.75	79.72	X1027		10	12			D0461027054		
0.37-0.75	68.09	X1224		10	12			D0461224041		
0.37-0.75	65.36	X1020		10	12			D0461020061	ZR56-14.2(66/21) /R56-13.2(21/66)	
0.55-1.1	56.49	X1022			12	14		D0461022058		
0.55-1.1	48.00	X1025			12	14		D0461025056		
0.55-1.1	42.86	X1027			12	14		D0461027054		
0.75-1.5	36.61	X1224			12	14		D0461224041		
0.75-1.5	34.29	X1225			12	14		D0461225040		
0.75-1.5	28.88	X1523			12	14		D0461523031		
1.1-1.5	30.86	X1019				14		D0601019086		
1.1-1.5	29.32	X1020				14		D0601020086		
1.1-2.2	25.72	X1022				14	16	D0601022083		
1.1-2.2	21.82	X1025				14	16	D0601025080		
1.1-3.0	19.70	X1027				14	16	D0601027078		
1.5-3.0	17.33	X1224				14	16	D0601224061		
1.5-3.0	16.36	X1225				14	16	D0601225060		
1.5-3.0	13.93	X1523				14	16	D0601523047	/	
2.2-3.0	12.66	X1721					16	D0601721039		
2.2-3.0	10.97	X1723					16	D0601723037		
2.2-3.0	8.96	X1027					16	D0601027078		
2.2-3.0	7.88	X1224					16	D0601224061		
2.2-3.0	7.44	X1225					16	D0601225060		D
2.2-3.0	6.33	X1523					16	D0601523047		
2.2-3.0	5.76	X1721					16	D0601721039		
2.2-3.0	4.99	X1723					16	D0601723037		

Selection of instruction:

1. The basic gearboxes=E+X+A+C, or F+Y+B+C, or G+Z+C,or H+V+D (with extra IEC input flange)

E+X+A+C,collocate ratio from 68.09 to 190.76
F+Y+B+C,collocate ratio from 28.88 to 65.36
G+Z+C,collocate ratio from 10.97 to 30.86
H+V+D,collocate ratio from 4.99 to 8.96

2. E.g: if you need to collocate ratio 16.36,you should choose basic modular C
with First stage-small gear G（X1225) and first stage big gear Z(D0601225060)
if you need to collocate ratio to 79.72,you should choose basic modular C
with Second stage gear shaft R56-13.1(13/76) , and Second stage gear ZR56-14.1(76/13)
and First stage-small gear E(X1027) with first stage big gear X(D0461027054)

3. Diameter of first stage-small gear depends on motor size.

MFA67 RATIO MATCH TABLE

Motor power range(KW)	Ratio	First stage-small gear	63 type	71 type	80 type	90 type	100 type	112 type	132 type	First stage-big gear	Second stage-gear and gear shaft	Basic Modular
0.18-0.37	228.99	X1015	10	10						D0601015091	ZF67-14.1(4213022) /ZF67-13.1(89/16)	C
0.18-0.55	195.39	X1017	10	10	12					D0601017088		
0.18-0.55	170.85	X1019	10	10	12					D0601019086		
0.25-0.55	162.31	X1020		10	12					D0601020086		
0.25-0.75	142.40	X1022		10	12					D0601022083		
0.37-0.75	120.79	X1025		10	12					D0601025080		
0.55-1.1	109.04	X1027			12	14				D0601027078		
0.55-1.1	95.94	X1224			12	14				D0601224061		
0.55-1.1	90.59	X1225			12	14				D0601225060		
0.55-1.5	79.76	X1022			12	14				D0601022083	ZF67-14.2(4213018) /ZF67-13.2(81/26)	
0.75-1.5	67.65	X1025			12	14				D0601025080		
0.75-1.5	61.07	X1027			12	14				D0601027078		
1.1-2.2	53.73	X1224				14	16			D0601224061		
1.1-2.2	50.74	X1225				14	16			D0601225060		
1.1-3.0	43.20	X1523				14	16			D0601523047		
1.1-3.0	39.26	X1721				14	16			D0601721039		
1.1-3.0	34.01	X1723				14	16			D0601723037		
1.5	36.30	X1020				14				D0721020107	/	
1.5-3.0	32.08	X1022				14	16			D0721022104		
1.5-4.0	27.41	X1025				14	16	18		D0721025101		
1.5-4.0	25.13	X1027				14	16	18		D0721027100		
2.2-5.5	22.05	X1224					16	18	22	D0721224078		
2.2-5.5	20.90	X1225					16	18	22	D0721225077		
2.2-5.5	18.29	X1523					16	18	22	D0721523062		
3.0-5.5	16.48	X1721					16	18	22	D0721721051		
3.0-5.5	14.46	X1723					16	18	22	D0721723049		
4.0-5.5	12.76	X1725						18	22	D0721725047		
4.0-5.5	11.31	X1727						18	22	D0721727045		
4.0-5.5	9.66	X2026						18	22	D0722026037		
4.0-5.5	9.08	X1224						18	22	D0721224078		D
4.0-5.5	8.60	X1225						18	22	D0721225077		
4.0-5.5	7.53	X1523						18	22	D0721523062		
4.0-5.5	6.78	X1721						18	22	D0721721051		
4.0-5.5	5.95	X1723						18	22	D0721723049		
4.0-5.5	5.25	X1725						18	22	D0721725047		
4.0-5.5	4.66	X1727						18	22	D0721727045		
4.0-5.5	3.97	X2026						18	22	D0722026037		

Selection of instruction:

1. The basic gearboxes=E+X+A+C, or F+Y+B+C, or G+Z+C,or H+V+D (with extra IEC input flange)

E+X+A+C,collocate ratio from 90.59 to 228.99
F+Y+B+C,collocate ratio from 34.01 to 79.76.
G+Z+C,collocate ratio from 9.66 to 36.30.
H+V+D,collocate ratio from 3.97 to 9.08.

2. E.g: if you need to collocate ratio 12.76,you should choose basic modular C
with First stage-small gear G(X1725) and first stage big gear Z(D0721725047).
if you need to collocate ratio to 95.94,you should choose basic modular C
with Second stage gear shaft ZF67-13.1(89/16) and Second stage gear AZF67-14.1(4213022),
and First stage-small gear E(X1224) with first stage big gear X(D0601224061)

3. Diameter of first stage-small gear depends on motor size.

MFA77 RATIO MATCH TABLE

Motor power range(KW)	Ratio	First stage-small gear	71 type	80 type	90 type	100 type	112 type	132 type	160 type	First stage-big gear	Second stage-gear and gear shaft	Basic Modular
0.37	281.71	X1014	10							D0721014112	ZF77-14.1(87/14) ZF77-13.1(87/14)	C
0.37	262.93	X1015	10							D0721015112		
0.37-0.75	225.79	X1017	10	12						D0721017109		
0.37-1.1	198.31	X1019	10	12	14					D0721019107		
0.55-1.1	188.40	X1020		12	14					D0721020107		
0.55-1.1	166.47	X1022		12	14					D0721022104		
0.55-1.5	142.27	X1025		12	14					D0721025101		
0.55-1.5	130.42	X1027		12	14					D0721027100		
0.55-1.5	114.45	X1224		12	14					D0721224078		
0.55-2.2	108.46	X1225		12	14	16				D0721225077		
0.55-2.2	94.93	X1523		12	14	16				D0721523062		
1.1-2.2	85.52	X1721			14	16				D0721721051		
1.1-3.0	75.02	X1723			14	16				D0721723049		
1.5	72.50	X1025			14					D0721025101	ZF77-14.2(76/24) ZF77-13.2(76/24)	
1.5-3.0	66.46	X1027			14	16				D0721027100		
1.5-4.0	58.32	X1224			14	16	18			D0721224078		
1.5-4.0	55.27	X1225			14	16	18			D0721225077		
1.5-4.0	48.37	X1523			14	16	18			D0721523062		
1.5-5.5	43.58	X1721			14	16	18	22		D0721721051		
1.5-5.5	38.23	X1723			14	16	18	22		D0721723049		
4-5.5	33.74	X1725					18	22		D0721725047		
4-7.5	29.91	X1727					18	22		D0721727045		
4-7.5	25.54	X2026					18	22		D0722026037		
1.5-3.0	36.58	X1022			14	16				D0931022142	/	
1.5-4.0	31.51	X1025			14	16	18			D0931025139		
2.2-4.0	28.75	X1027				16	18			D0931027137		
2.2-7.5	25.50	X1224				16	18	22		D0931224108		
3.0-7.5	21.43	X1523				16	18	22		D0931523087		
4.0-7.5	19.70	X1721					18	22		D0931721073		
4.0-11	17.49	X1723					18	22	28	D0931723071		
5.5-11	15.64	X1725						22	28	D0931725069		
5.5-11	14.06	X1727						22	28	D0931727067		
5.5-11	12.21	X2026						22	28	D0932026056		
7.5-11	10.93	X2028						22	28	D0932028054		
7.5-11	9.30	X1721						22	28	D0931721073		D
7.5-11	8.26	X1723						22	28	D0931723071		
7.5-11	7.38	X1725						22	28	D0931725069		
7.5-11	6.64	X1727						22	28	D0931727067		
7.5-11	5.76	X2026						22	28	D0932026056		
7.5-11	5.16	X2028						22	28	D0932028054		
7.5-11	4.28	X2525						22	28	D0932525040		

Selection of instruction:

1. The basic gearboxes=E+X+A+C, or F+Y+B+C, or G+Z+C,or H+V+D (with extra IEC input flange)

E+X+A+C,collocate ratio from 75.02 to 281.71
F+Y+B+C,collocate ratio from 25.54 to 72.50.
G+Z+C,collocate ratio from 10.93 to 36.58.
H+V+D,collocate ratio from 4.28 to 9.30.

2. E.g: if you need to collocate ratio 12.21,you should choose basic modular C
with First stage-small gear G(X2026) and first stage big gear Z(D0932026056)
if you need to collocate ratio to 94.93,you should choose basic modular C
with Second stage gear shaft A ZF77-13(87/14) and Second stage gear ZF77-14(87/14),
and First stage-small gear E(X1523) with first stage big gear X(D0721523062)

3. Diameter of first stage-small gear depends on motor size.

MFA87 RATIO MATCH TABLE

Motor power range(KW)	Ratio	First stage-small gear	80 type	90 type	100 type	112 type	132 type	160 type	180 type	First stage-big gear	Second stage-gear and gear shaft	Basic Modular
0.75-1.5	270.68	X1019	12	14						D0931019145	ZF87-13.1(109/18) /ZF87-14.1(109/18)	C
0.75-1.5	255.37	X1020	12	14						D0931020144		
0.75-1.5	228.93	X1022	12	14						D0931022142		
1.1-2.2	197.20	X1025		14	16					D0931025139		
1.1-2.2	179.97	X1027		14	16					D0931027137		
1.1-2.2	159.61	X1224		14	16					D0931224108		
1.1-3.0	134.16	X1523		14	16					D0931523087		
1.1-3.0	123.29	X1721		14	16					D0931721073		
1.5-4.0	109.49	X1723		14	16	18				D0931723071		
1.5-4.0	97.89	X1725		14	16	18				D0931725069		
2.2-5.5	88.01	X1727			16	18	22			D0931727067		
2.2-5.5	76.39	X2026			16	18	22			D0932026056		
2.2-5.5	68.40	X2028			16	18	22			D0932028054		
2.2-7.5	56.75	X2525			16	18	22			D0932525040		
2.2-7.5	50.36	X1725			16	18	22			D0931725069	ZF87-13.2(81/26) /ZF87-14.2(81/26)	
2.2-7.5	45.28	X1727			16	18	22			D0931727067		
5.5-11	39.30	X2026					22	28		D0932026056		
5.5-11	35.19	X2028					22	28		D0932028054		
5.5-11	29.20	X2525					22	28		D0932525040		
5.5	33.92	X1224					22			D1161224139	/	
5.5-7.5	28.78	X1523					22			D1161523113		
5.5-15	26.50	X1721					22	28		D1161721095		
5.5-15	23.68	X1723					22	28		D1161723093		
7.5-22	21.32	X1725					22	28	32	D1161725091		
7.5-22	19.31	X1727					22	28	32	D1161727089		
7.5-22	17.12	X2026					22	28	32	D1162026076		
7.5-22	15.48	X2028					22	28	32	D1162028074		
11.0-22	13.12	X2525						28	32	D1162525056		
15.0-22	11.46	X3023						28	32	D1163023045		
15.0-22	9.58	X3522						28	32	D1163522036		
15.0-22	8.30	X3524						28	32	D1163524034		
15.0-22	7.35	X2026						28	32	D1162026076		D
15.0-22	6.65	X2028						28	32	D1162028074		
15.0-22	5.63	X2525						28	32	D1162525056		
15.0-22	4.92	X3023						28	32	D1163023045		
15.0-22	4.12	X3522						28	32	D1163522036		

Selection of instruction:

1. The basic gearboxes=E+X+A+C, or F+Y+B+C, or G+Z+C,or H+V+D (with extra IEC input flange)

E+X+A+C,collocate ratio from 56.75 to 270.68.
F+Y+B+C,collocate ratio from 29.20 to 50.36.
G+Z+C,collocate ratio from 8.3 to 33.92.
H+V+D,collocate ratio from 4.12 to 7.35.

2. E.g: if you need to collocate ratio 11.46,you should choose basic modular C
with First stage-small gear G(X3023) and first stage big gear Z(D1163023045)
if you need to collocate ratio to 97.89,you should choose basic modular C
with Second stage gear shaft A ZF87-13.1(109/18) and Second stage gear ZF87-14.1(109/18),
and First stage-small gear E(X1725) with first stage big gear X(D0931725069)

3. Diameter of first stage-small gear depends on motor size.

WMFA97 RATIO MATCH TABLE

Motor power range(KW)	Ratio	First stage-small gear	90 type	100 type	112 type	132 type	160 type	180 type	200 type	First stage-big gear	Second stage-gear and gear shaft	Basic Modular
1.1-2.2	276.77	X1025	14	16						D1161025179		
1.1-2.2	253.41	X1027	14	16						D1161027177		
1.1-3	223.88	X1224	14	16						D1161224139		
1.5-3	189.92	X1523	14	16						D1161523113		
1.5-3	174.87	X1721	14	16						D1161721095		
2.2-4	156.30	X1723		16	18					D1161723093	R106-13.1(71/12) /R106-14.1(71/12)-2K	
2.2-4	140.71	X1725		16	18					D1161725091		
2.2-4	127.42	X1727		16	18					D1161727089		
3-5.5	112.99	X2026		16	18	22				D1162026076		
3-5.5	102.16	X2028		16	18	22				D1162028074		
5.5-7.5	86.59	X2525				22				D1162525056		
5.5-7.5	75.63	X3023				22				D1163023045		
4-5.5	97.58	X1523			18	22				D1161523113		
3-7.5	89.85	X1721		16	18	22				D1161721095		
4-7.5	80.31	X1723			18	22				D1161723093		
4-7.5	72.30	X1725			18	22				D1161725091		
4-7.5	65.47	X1727			18	22				D1161727089	R106-13.2(76/25) /R106-14.2(76/25)-2K	
5.5-11	58.06	X2026				22	28			D1162026076		
5.5-11	52.49	X2028				22	28			D1162028074		
7.5-15	44.49	X2525				22	28			D1162525056		
7.5-15	38.86	X3023				22	28			D1163023045		
7.5-18.5	32.50	X3522				22	28	32		D1163522036		
7.5	43.28	X1224				22				D1301224159		
7.5	36.64	X1523				22				D1301523129		
7.5-15	33.91	X1721				22	28			D1301721109		
7.5-15	30.39	X1723				22	28			D1301723107		
11-22	27.44	X1725				22	28	32		D1301725105		
11-22	24.92	X1727					28	32		D1301727103		
11-22	22.11	X2026					28	32		D1302026088		
15-22	20.07	X2028					28	32		D1302028086		
15-22	17.25	X2525					28	32		D1302525066		
15-22	15.06	X3023					28	32		D1303023053		
15-22	12.77	X3522					28	32		D1303522043		
30	11.16	X3524							38	D1303524041		
30	9.06	X2026							38	D1302026088		
30	8.22	X2028							38	D1302028086		
30	7.07	X2525							38	D1302525066		
30	6.17	X3023							38	D1303023053		
30	5.23	X3522							38	D1303522043		
30	4.57	X3524							38	D1303524041		

Selection of instruction:

1. The basic gearboxes=E+X+A+C, or F+Y+B+C, or G+Z+C,or H+V+D (with extra IEC input flange)

E+X+A+C,collocate ratio from 75.63 to 276.77
F+Y+B+C,collocate ratio from 32.5 to 97.58
G+Z+C,collocate ratio from 11.16 to 43.28
H+V+D,collocate ratio from 4.57 to 9.06

2. E.g: if you need to collocate ratio 24.92,you should choose basic modular C
with First stage-small gear G(X1727) and first stage big gear Z(D1301727103)
if you need to collocate ratio to 156.30,you should choose basic modular C
with Second stage gear shaft A ZF97-13.1(71/12), and Second stage gear ZF97-14.1(71/12)
and First stage-small gear E(X1723) with first stage big gear X(D1161723093)

3. Diameter of first stage-small gear depends on motor size.

Output speed (r/min)	Output torque (N.M)	Ratio (i)	Service Factor (fs)	Type	Motor Pole
0.12KW					
3.9	290	228.99	2.8	MFA 67 MFAF67 MF 67 MFF 67	4P
4.6	250	195.39	3.3		
5.3	220	170.85	3.8		
5.6	205	162.31	4.0		
6.3	181	142.40	4.5		
4.7	245	190.76	1.65	WMFA 47 WMFAF47 WMF 47 WMFF 47	6P
5.1	225	175.38	1.80		
6.0	191	150.06	2.1		
6.9	166	130.07	2.4		
7.4	155	121.57	2.6		
8.6	134	105.09	3.0		
10	114	89.29	3.5		
11	102	79.72	3.9		
7.2	158	190.76	2.5	WMFA 47 WMFAF47 WMF 47 WMFF 47	4P
7.9	146	175.38	2.8		
9.2	125	150.06	3.2		
11	108	130.07	3.7		
7.0	164	128.51	1.20	WMFA 37 WMFAF37 WMF 37 WMFF 37	6P
7.6	150	117.88	1.35		
9.0	128	100.36	1.55		
10	110	86.53	1.80		
11	103	80.65	1.95		
11	107	128.51	1.85	WMFA 37 WMFAF37 WMF 37 WMFF 37	4P
12	98	117.88	2.0		
14	83	100.36	2.4		
16	72	86.53	2.8		
17	67	80.65	3.0		
20	59	70.50	3.4		
21	55	66.09	3.6		
24	48	58.32	4.1		
25	45	54.54	4.4		
27	43	51.70	4.7		
29	39	47.02	5.1		
31	36	43.83	5.5		
36	32	38.31	6.3		
38	30	35.91	6.7		
44	26	31.69	7.6		
49	23	28.09	8.6		
58	20	23.88	10		
58	20	23.63	10		
67	17	20.57	12		
72	16	19.27	13		
81	14	17.03	14		
87	13	15.81	15		
96	12	14.33	17		
107	11	12.87	19		
125	9.2	11.08	21		
132	8.7	10.42	21		
154	7.4	8.97	24		
186	6.2	7.44	23		
205	5.6	6.74	25		
228	5.0	6.05	27		
265	4.3	5.21	29		
282	4.1	4.90	29		
327	3.5	4.22	31		

Output speed (r/min)	Output torque (N.M)	Ratio (i)	Service Factor (fs)	Type	Motor Pole
0.18KW					
3.1	555	281071	2.7	MFA 77 MFAF77 MF 77 MFF 77	6P
3.3	520	262.93	2.9		
3.8	445	225.79	3.4		
3.8	450	228.99	1.80	MFA 67 MFAF67 MF 67 MFF 67	6P
4.4	385	195.39	2.1		
5.1	340	170.85	2.4		
5.8	300	228.99	2.8	MFA 67 MFAF67 MF 67 MFF 67	4P
6.8	255	195.39	3.2		
7.7	225	170.85	3.7		
4.6	375	190.79	1.05	WMFA 47 WMFAF47 WMF 47 WMFF 47	6P
5.0	345	175.38	1.15		
5.8	295	150.06	1.35		
6.7	255	130.07	1.55		
7.2	240	121.57	1.65		
6.9	250	190.76	1.60	WMFA 47 WMFAF47 WMF 47 WMFF 47	4P
7.5	230	175.38	1.75		
8.8	195	150.06	2.0		
10	169	130.07	2.4		
11	158	121.57	2.5		
7.4	235	117.88	0.85	WMFA 37 WMFAF37 WMF 37 WMFF 37	6P
8.7	198	100.36	1.00		
10	171	86.53	1.15		
11	159	80.65	1.25		
12	139	70.50	1.45		
10	167	128.51	1.20	WMFA 37 WMFAF37 WMF 37 WMFF 37	4P
11	154	117.88	1.30		
13	131	100.36	1.55		
15	113	86.53	1.75		
16	105	80.65	1.90		
19	92	70.50	2.2		
20	86	66.09	2.3		
23	76	58.32	2.6		
24	71	54.54	2.8		
26	67	51.70	3.0		
28	61	47.02	3.3		
30	57	43.83	3.5		
34	50	38.31	4.0		
37	47	35.91	4.3		
42	41	31.69	4.8		
47	37	28.09	5.5		
55	31	23.88	6.4		
56	31	23.63	6.5		
64	27	20.57	7.5		
69	25	19.27	8.0		
78	22	17.03	9.0		
83	21	15.81	9.7		
92	19	14.33	11		
103	17	12.87	12		
119	14	11.08	13		
127	14	10.42	14		
147	12	8.97	15		
178	9.7	7.44	15		
196	8.8	6.74	16		
218	7.9	6.05	17		
253	6.8	5.21	18		
269	6.4	4.90	19		
313	5.5	4.22	20		

Output speed (r/min)	Output torque (N.M)	Ratio (i)	Service Factor (fs)	Type	Motor Pole
0.25KW					
3.1	765	281.71	1.95	MFA 77 MFAF77 MF 77 MFF 77	6P
3.3	715	262.93	2.1		
3.9	615	225.79	2.5		
4.4	540	198.31	2.8		
4.7	510	188.40	2.9		
3.8	620	228.99	1.30	MFA 67 MFAF67 MF 67 MFF 67	6P
4.5	530	195.39	1.55		
5.2	465	170.85	1.75		
5.4	440	162.31	1.85		
6.2	385	142.40	2.1		
5.7	420	228.99	1.95	MFA 67 MFAF67 MF 67 MFF 67	4P
6.7	360	195.39	2.3		
7.6	315	170.85	2.6		
8.0	300	162.31	2.8		
9.1	260	142.40	3.1		
5.9	405	150.06	1.00	WMFA 47 WMFAF47 WMF 47 WMFF 47	6P
6.8	355	130.07	1.15		
7.2	330	121.57	1.20		
8.4	285	105.09	1.40		
6.8	350	190.76	1.15	WMFA 47 WMFAF47 WMF 47 WMFF 47	4P
7.4	320	175.38	1.25		
8.7	275	150.06	1.45		
10	240	130.07	1.65		
11	225	121.57	1.80		
12	193	105.09	2.1		
15	164	89.29	2.4		
10	235	128.51	0.85	WMFA 37 WMFAF37 WMF 37 WMFF 37	4P
11	215	117.88	0.90		
13	184	100.36	1.10		
15	159	86.53	1.25		
16	148	80.65	1.35		
18	130	70.50	1.55		
20	121	66.09	1.65		
22	107	58.32	1.85		
24	100	54.54	2.0		
25	95	51.70	2.1		
28	86	47.02	2.3		
30	81	43.83	2.5		
34	70	38.31	2.8		
36	66	35.91	3.0		
41	58	31.69	3.4		
46	52	28.09	3.9		
54	44	23.88	4.6		
55	43	23.63	4.6		
63	38	20.57	5.3		
67	35	19.27	5.7		
76	31	17.03	6.4		
82	29	15.81	6.9		
91	26	14.33	7.6		
101	24	12.87	8.5		
117	20	11.08	9.3		
125	19	10.42	9.7		
145	17	8.97	11		
175	14	7.44	11		
193	12	6.74	11		
215	11	6.05	12		
249	9.6	5.21	13		
265	9.0	4.90	13		
308	7.7	4.22	14		

Output speed (r/min)	Output torque (N.M)	Ratio (i)	Service Factor (fs)	Type	Motor Pole
0.37KW					
2.5	1410	270.68	2.1	MFA 87 MFAF87 MF 87 MFF 87	8P
2.7	1330	255.37	2.3		
3.0	1190	228.93	2.5		
3.5	1020	197.20	2.9		
3.3	1060	270.68	2.8	MFA 87 MFAF87 MF 87 MFF 87	6P
3.5	1000	255.37	3.0		
3.9	900	228.93	3.3		
4.0	890	225.79	1.70	MFA 77 MFAF77 MF 77 MFF 77	6P
4.5	780	198.31	1.95		
4.8	740	188.40	2.0		
5.4	655	166.47	2.3		
6.3	560	142.27	2.7		
4.9	720	281.71	2.1	MFA 77 MFAF77 MF 77 MFF 77	4P
5.2	675	262.93	2.2		
6.1	580	225.79	2.6		
7.0	510	198.31	3.0		
4.6	765	195.39	1.05	MFA 67 MFAF67 MF 67 MFF 67	6P
5.3	670	170.85	1.20		
5.6	635	162.31	1.30		
6.3	560	142.40	1.45		
7.4	475	120.79	1.75		
6.0	585	228.99	1.40	MFA 67 MFAF67 MF 67 MFF 67	4P
7.1	500	195.39	1.65		
8.1	435	170.85	1.85		
8.5	415	162.31	1.95		
9.7	365	142.40	2.2		
11	310	120.79	2.7		
9.2	385	150.06	1.05	WMFA 47 WMFAF47 WMF 47 WMFF 47	4P
11	335	130.07	1.20		
13	270	105.09	1.50		
15	230	89.29	1.75		
17	205	79.72	1.95		
20	174	68.09	2.3		
21	167	65.36	2.4		
16	220	86.53	0.90	WMFA 37 WMFAF37 WMF 37 WMFF 37	4P
17	205	80.65	0.95		
20	181	70.50	1.10		
21	169	66.09	1.20		
24	149	58.32	1.35		
25	140	54.54	1.45		
27	132	51.70	1.50		
29	120	47.02	1.65		
31	112	43.83	1.80		
36	98	38.31	2.0		
38	92	35.91	2.2		
44	81	31.69	2.5		
49	72	28.09	2.8		
58	61	23.88	3.3		
58	61	23.63	3.3		
67	53	20.57	3.8		
72	49	19.27	4.1		
81	44	17.03	4.6		
87	41	15.81	4.9		
96	37	14.33	5.4		
107	33	12.87	6.1		
125	28	11.08	6.7		
132	27	10.42	6.9		
154	23	8.97	7.6		
186	19	7.44	7.6		
205	17	6.74	8.1		
228	16	6.05	8.7		
265	13	5.21	9.4		
282	13	4.90	9.6		
327	11	4.22	10		

Output speed (r/min)	Output torque (N.M)	Ratio (i)	Service Factor (fs)	Type	Motor Pole
0.55KW					
2.5	2140	276.77	2.0	WMFA 97 WMFAF97 WMF 97 WMFF 97	8P
2.7	1960	253.41	2.2		
3.0	1730	223.88	2.5		
2.5	2090	270.68	1.45	MFA 87 MFAF87 MF 87 MFF 87	8P
2.7	1970	255.37	1.50		
3.0	1770	228.93	1.70		
3.5	1520	197.20	1.95		
3.3	1580	270.68	1.90	MFA 87 MFAF87 MF 87 MFF 87	6P
3.5	1490	255.37	2.0		
3.9	1340	228.93	2.2		
4.6	1150	197.20	2.6		
5.0	1050	179.97	2.9		
4.0	1320	225.79	1.15	MFA 77 MFAF77 MF 77 MFF 77	6P
4.5	1160	198.31	1.30		
4.8	1100	188.40	1.35		
5.4	970	166.47	1.55		
6.3	830	142.27	1.80		
6.9	760	130.42	1.95		
6.0	870	225.79	1.70	MFA 77 MFAF77 MF 77 MFF 77	4P
6.9	765	198.31	1.95		
7.2	730	188.40	2.1		
8.2	645	166.47	2.3		
9.6	550	142.27	2.7		
10	505	130.42	3.0		
12	440	114.45	3.4		
13	420	108.46	3.6		
14	365	94.93	4.1		
7.0	755	195.39	1.10	MFA 67 MFAF67 MF 67 MFF 67	4P
8.0	660	170.85	1.25		
8.4	625	162.31	1.30		
9.6	550	142.40	1.50		
11	465	120.79	1.75		
12	420	109.04	1.95		
14	370	95.94	2.2		
15	350	90.59	2.3		
17	310	79.76	2.7		
13	405	105.09	1.00	WMFA 47 WMFAF47 WMF 47 WMFF 47	4P
15	345	89.29	1.15		
17	310	79.72	1.30		
20	265	68.09	1.50		
21	250	65.36	1.60		
24	220	56.49	1.85		
28	185	48.00	2.2		
32	166	42.86	2.4		

Output speed (r/min)	Output torque (N.M)	Ratio (i)	Service Factor (fs)	Type	Motor Pole
0.55KW					
23	225	58.32	0.90	WMFA 37 WMFAF37 WMF 37 WMFF 37	4P
25	210	54.54	0.95		
26	200	51.70	1.00		
29	182	47.02	1.10		
31	169	43.83	1.20		
36	148	38.31	1.35		
38	139	35.91	1.45		
43	122	31.69	1.65		
48	109	28.09	1.85		
57	92	23.68	2.2		
58	91	23.63	2.2		
66	79	20.57	2.5		
71	74	19.27	2.7		
80	66	17.03	3.0		
95	55	14.33	3.6		
106	50	12.87	4.0		
123	43	11.08	4.4		
130	40	10.42	4.6		
152	35	8.97	5.1		
170	31	8.01	5.5		
183	29	7.44	5.1		
202	26	6.74	5.4		
225	23	6.05	5.8		
261	20	5.21	6.2		
277	19	4.90	6.3		
322	16	4.22	6.8		
361	15	3.77	7.2		
0.75KW					
2.5	2870	276.77	1.50	WMFA 97 WMFAF97 WMF 97 WMFF 97	8P
2.7	2630	263.41	1.65		
3.1	2320	223.88	1.85		
3.2	2200	276.77	1.95	WMFA 97 WMFAF97 WMF 97 WMFF 97	6P
3.5	2020	253.41	2.1		
4.0	1780	223.88	2.4		
3.3	2150	270.68	1.40	MFA 87 MFAF87 MF 87 MFF 87	6P
3.5	2030	255.37	1.50		
3.9	1820	228.93	1.65		
4.6	1570	197.20	1.90		
5.0	1430	179.97	2.1		
5.6	1270	159.61	2.4		
5.1	1400	270.68	2.1	MFA 87 MFAF87 MF 87 MFF 87	4P
5.4	1330	255.37	2.3		
6.0	1190	228.93	2.5		
4.5	1580	198.31	0.95	MFA 77 MFAF77 MF 77 MFF 77	6P
4.8	1500	188.40	1.00		
5.4	1320	166.47	1.15		
6.3	1130	142.27	1.30		
6.9	1040	130.42	1.45		

Output speed (r/min)	Output torque (N.M)	Ratio (i)	Service Factor (fs)	Type	Motor Pole
0.75KW					
6.1	1170	225.79	1.30	MFA 77 MFAF77 MF 77 MFF 77	4P
7.0	1030	198.31	1.45		
7.3	980	188.40	1.55		
8.3	860	166.47	1.75		
9.7	740	142.27	2.0		
11	675	130.42	2.2		
12	595	114.45	2.5		
13	565	108.46	2.7		
8.1	890	170.85	0.90	MFA 67 MFAF67 MF 67 MFF 67	4P
8.5	840	162.31	0.95		
9.7	740	142.40	1.10		
11	625	120.79	1.30		
13	565	109.04	1.45		
14	500	95.94	1.65		
15	470	90.59	1.75		
17	415	79.76	2.0		
20	350	67.65	2.3		
23	315	61.07	2.6		
17	415	79.72	0.95	WMFA 47 WMFAF47 WMF 47 WMFF 47	4P
20	355	68.09	1.15		
21	340	65.36	1.20		
24	295	56.49	1.35		
29	250	48.00	1.60		
32	220	42.86	1.80		
38	190	36.61	2.1		
40	178	34.29	2.2		
48	150	28.88	2.7		
29	145	47.02	0.80	WMFA 37 WMFAF37 WMF 37 WMFF 37	4P
31	230	43.83	0.90		
36	199	38.31	1.00		
38	186	35.91	1.05		
44	165	31.69	1.20		
49	146	28.09	1.35		
58	124	23.88	1.60		
58	123	23.63	1.65		
67	107	20.57	1.85		
72	100	19.27	2.0		
81	88	17.03	2.3		
96	74	14.33	2.7		
107	67	12.87	3.0		
125	58	11.08	3.3		
132	54	10.42	3.4		
154	47	8.97	3.8		
205	35	6.74	4.0		
228	31	6.05	4.3		
265	27	5.21	4.6		
282	25	4.90	4.7		
327	22	4.22	5.0		
366	20	3.77	5.4		

Output speed (r/min)	Output torque (N.M)	Ratio (i)	Service Factor (fs)	Type	Motor Pole
1.1KW					
3.3	3160	276.77	1.35	WMFA 97 WMFAF97 WMF 97 WMFF 97	6P
3.6	2890	253.41	1.50		
4.1	2560	223.88	1.70		
4.8	2170	189.92	2.0		
5.3	2000	174.87	2.2		
5.1	2080	276.77	2.1	WMFA 97 WMFAF97 WMF 97 WMFF 97	4P
5.5	1900	253.41	2.3		
6.2	1680	223.88	2.6		
3.4	3090	270.68	0.95	MFA 87 MFAF87 MF 87 MFF 87	6P
3.6	2920	255.37	1.05		
4.0	2610	228.93	1.15		
4.7	2250	197.20	1.35		
5.1	2050	179.97	1.45		
5.8	1820	159.61	1.65		
5.2	2030	270.68	1.50	MFA 87 MFAF87 MF 87 MFF 87	4P
5.5	1920	255.37	1.55		
6.1	1720	228.93	1.75		
7.1	1480	197.20	2.0		
7.8	1350	179.97	2.2		
8.8	1200	159.61	2.5		
10	1010	134.16	3.0		
11	930	123.29	3.2		
7.1	1490	198.31	1.00	MFA 77 MFAF77 MF 77 MFF 77	4P
7.4	1410	188.40	1.05		
8.4	1250	166.47	1.20		
9.8	1070	142.27	1.40		
11	980	130.42	1.55		
12	850	114.45	1.75		
13	810	108.46	1.85		
15	710	94.93	2.1		
16	640	85.52	2.3		
19	565	75.02	2.7		
12	910	120.79	0.90	MFA 67 MFAF67 MF 67 MFF 67	4P
13	820	109.04	1.00		
15	720	95.94	1.15		
15	680	90.59	1.20		
18	600	79.76	1.35		
21	510	67.65	1.60		
23	460	61.07	1.80		
26	105	53.73	2.0		
28	380	50.74	2.2		
32	325	43.20	2.5		
36	395	39.26	2.7		
41	255	34.01	2.9		

Output speed (r/min)	Output torque (N.M)	Ratio (i)	Service Factor (fs)	Type	Motor Pole
1.1KW					
25	425	56.49	0.95	WMFA 47 WMFAF47 WMF 47 WMFF 47	4P
29	360	48.00	1.10		
33	320	42.86	1.25		
38	275	36.61	1.45		
41	255	34.29	1.55		
48	215	28.88	1.85		
45	230	30.86	1.75		
48	220	29.32	1.80		
54	193	25.72	2.1		
64	164	21.82	2.4		
71	148	19.70	2.7		
44	240	31.69	0.85	WMFA 37 WMFAF37 WMF 37 WMFF 37	4P
50	210	28.09	0.95		
59	179	23.88	1.10		
68	154	20.57	1.30		
73	145	19.27	1.40		
82	128	17.03	1.55		
98	108	14.33	1.85		
109	97	12.87	2.1		
126	83	11.08	2.3		
134	78	10.42	2.4		
156	67	8.97	2.6		
175	60	8.01	2.8		
208	51	6.74	2.8		
231	45	6.05	3.0		
269	39	5.21	3.2		
286	37	4.90	3.3		
332	32	4.22	3.5		
372	28	3.77	3.7		
1.5KW					
3.3	4310	276.77	1.00	WMFA 97 WMFAF97 WMF 97 WMFF 97	6P
3.6	3950	253.41	1.10		
4.1	3490	223.88	1.25		
4.8	2960	189.92	1.45		
5.3	2720	174.87	1.60		
5.1	2810	276.77	1.55	WMFA 97 WMFAF97 WMF 97 WMFF 97	4P
5.6	2570	253.41	1.65		
6.3	2270	223.88	1.90		
7.4	1930	189.92	2.2		
8.1	1780	174.87	2.4		
5.2	2750	270.68	1.10	MFA 87 MFAF87 MF 87 MFF 87	4P
5.5	2590	255.37	1.15		
6.2	2330	228.93	1.30		
7.2	2000	197.20	1.50		
7.8	1830	179.97	1.65		
8.8	1620	159.61	1.85		
11	1360	134.16	2.2		
13	1110	109.49	2.7		
14	990	97.89	3.0		

Output speed (r/min)	Output torque (N.M)	Ratio (i)	Service Factor (fs)	Type	Motor Pole
1.5KW					
8.5	1690	166.47	0.90	MFA 77 MFAF77 MF 77 MFF 77	4P
9.9	1450	142.27	1.05		
11	1320	130.42	1.15		
12	1160	114.45	1.30		
13	1100	108.46	1.35		
15	960	94.93	1.55		
16	870	85.52	1.75		
19	760	75.02	1.95		
19	735	72.50	2.0		
21	675	66.46	2.2		
24	595	58.32	2.5		
26	560	55.27	2.7		
29	490	48.37	3.0		
32	445	43.58	3.4		
37	390	38.23	3.9		
39	370	36.58	3.0		
45	320	31.51	4.3		
16	920	90.59	0.90	MFA 67 MFAF67 MF 67 MFF 67	4P
18	810	79.76	1.00		
21	685	67.65	1.20		
23	620	61.07	1.30		
26	545	53.73	1.50		
28	515	50.74	1.60		
33	440	43.20	1.85		
36	400	39.26	1.95		
39	370	36.30	2.2		
44	325	32.08	2.5		
51	280	27.41	2.9		
56	255	25.13	3.2		
33	435	42.86	0.90	WMFA 47 WMFAF47 WMF 47 WMFF 47	4P
39	370	36.61	1.10		
41	350	34.29	1.15		
49	295	28.88	1.35		
46	315	30.86	1.30		
48	300	29.32	1.35		
55	260	25.72	1.55		
65	220	21.82	1.80		
72	200	19.70	2.0		
81	176	17.33	2.3		
86	166	16.36	2.4		
101	142	13.93	2.8		
69	210	20.57	0.95	WMFA 37 WMFAF37 WMF 37 WMFF 37	4P
73	196	19.27	1.00		
83	173	17.03	1.15		
98	146	14.33	1.35		
110	131	12.87	1.55		
127	113	11.08	1.70		
135	106	10.42	1.75		
157	91	8.97	1.90		
176	81	8.01	2.1		
209	69	6.74	2.0		
233	62	6.05	2.2		
271	53	5.21	2.4		
288	50	4.90	2.4		
334	43	4.22	2.6		
374	38	3.77	2.7		

Output speed (r/min)	Output torque (N.M)	Ratio (i)	Service Factor (fs)	Type	Motor Pole
2.2KW					
4.2	5000	223.88	0.85	WMFA 97	6P
5.9	4240	189.92	1.00	WMFAF97	
5.4	3910	174.87	1.10	WMF 97	
6.0	3490	156.30	1.25	WMFF 97	
5.1	4120	276.77	1.05		
5.6	3780	253.41	1.15		
6.3	3340	223.88	1.30	WMFA 97	
7.4	2830	189.92	1.50	WMFAF97	4P
8.1	2610	174.87	1.65	WMF 97	
9.0	2330	156.30	1.85	WMFF 97	
10	2100	140.71	2.0		
11	1900	127.42	2.3		
7.2	2940	197.20	1.00		
7.8	2680	179.97	1.10		
8.8	2380	159.61	1.25		
11	2000	134.16	1.50		
11	1840	123.29	1.65	MFA 87	
13	1630	109.49	1.85	MFAF87	4P
14	1460	97.89	2.1	MF 87	
16	1310	88.01	2.3	MFF 87	
18	1140	76.39	2.6		
21	1020	68.40	2.9		
25	850	56.75	3.5		
28	750	50.36	3.9		
31	675	45.28	4.2		
12	1710	114.45	0.90		
13	1620	108.46	0.95		
15	1410	94.93	1.05		
16	1270	85.52	1.20		
19	1120	75.02	1.35		
21	990	66.46	1.50	MFA 77	
24	870	58.32	1.75	MFAF77	4P
26	820	55.27	1.80	MF 77	
29	720	48.37	2.1	MFF 77	
32	650	43.58	2.3		
39	545	36.58	2.0		
45	470	31.51	2.9		
49	430	28.75	3.3		
55	380	25.50	4.0		
23	910	61.07	0.90		
26	800	53.73	1.00		
28	755	50.74	1.10		
33	645	43.20	1.25		
36	585	39.26	1.35		
41	505	34.01	1.45	MFA 67	
44	480	32.08	1.70	MFAF67	4P
51	410	27.41	2.0	MF 67	
56	375	25.13	2.2	MFF 67	
64	330	22.05	2.5		
67	310	20.90	2.6		
77	275	18.29	3.0		
55	385	25.72	1.05		
65	328	21.82	1.25		
72	295	19.70	1.35		
81	260	17.33	1.55	WMFA 47	
86	245	16.36	1.65	WMFAF47	4P
101	210	13.93	1.95	WMF 47	
111	189	12.66	2.1	WMFF 47	
129	163	10.97	2.5		
157	133	8.96	2.5		

Output speed (r/min)	Output torque (N.M)	Ratio (i)	Service Factor (fs)	Type	Motor Pole
2.2KW					
98	245	14.33	0.95		
110	192	12.87	1.05		
127	165	11.08	1.15	WMFA 37	
135	155	10.42	1.20	WMFAF37	4P
157	134	8.97	1.30	WMF 37	
176	119	8.01	1.40	WMFF 37	
209	100	6.74	1.40		
233	90	6.05	1.50		
271	78	5.21	1.60		
288	73	4.90	1.65		
334	63	4.22	1.75		
374	56	3.77	1.85		
3.0KW					
6.2	4580	223.88	0.95		
7.4	3890	189.92	1.10		
8.0	3580	174.87	1.20	WMFA 97	
9.0	3200	156.30	1.35	WMFAF97	
9.9	2880	140.71	1.50	WMF 97	4P
11	2610	127.42	1.65	WMFF 97	
12	2310	112.99	1.85		
14	2090	102.16	2.1		
16	1840	89.85	2.3		
10	2750	134.16	1.10		
11	2520	123.29	1.20		
13	2240	109.49	1.35		
14	2000	97.89	1.50	MFA 87	
16	1800	88.01	1.65	MFAF87	4P
18	1560	76.39	1.90	MF 87	
20	1400	68.40	2.1	MFF 87	
25	1160	56.75	2.6		
28	1030	50.36	2.8		
16	1750	85.52	0.85		
19	1540	75.02	1.00		
21	1360	66.46	1.10		
24	1190	58.32	1.25		
25	1130	55.27	1.35		
29	990	48.37	1.50	MFA 77	
32	890	43.58	1.70	MFAF77	4P
37	780	38.23	1.90	MF 77	
38	750	36.58	1.50	MFF 77	
44	645	31.51	2.1		
49	590	28.75	2.4		
55	520	25.50	2.9		
65	440	21.43	3.4		
32	880	43.20	0.95		
36	800	39.26	0.95		
41	695	34.01	1.05	MFA 67	
44	655	32.08	1.25	MFAF67	4P
51	560	27.41	1.45	MF 67	
56	515	25.13	1.60	MFF 67	
63	450	22.05	1.80		
67	430	20.90	1.90		
77	375	18.29	2.2		
85	335	16.48	2.4		
97	295	14.46	2.8		

Output speed (r/min)	Output torque (N.M)	Ratio (i)	Service Factor (fs)	Type	Motor Pole
3.0KW					
71	405	19.70	1.00	WMFA 47 WMFAF47 WMF 47 WMFF 47	4P
81	355	17.33	1.15		
86	335	16.36	1.20		
100	285	13.93	1.40		
111	260	12.66	1.55		
128	225	10.97	1.80		
156	183	8.96	1.80		
126	225	11.08	0.85	WMFA 37 WMFAF37 WMF 37 WMFF 37	4P
134	215	10.42	0.85		
156	184	8.97	0.95		
175	164	8.01	1.05		
208	138	6.74	1.00		
231	124	6.05	1.10		
269	107	5.21	1.15		
286	100	4.90	1.20		
332	86	4.22	1.25		
372	77	3.77	1.35		
4. 0KW					
8.1	4700	174.87	0.90	WMFA 97 WMFAF97 WMF 97 WMFF 97	4P
9.1	4200	156.30	1.00		
10	3780	140.71	1.15		
11	3430	127.42	1.25		
13	3040	112.99	1.40		
14	2750	102.16	1.55		
15	2620	97.58	1.65		
16	2420	89.85	1.80		
18	2160	80.31	2.0		
20	1940	72.30	2.2		
22	1760	65.47	2.4		
13	2950	109.49	1.00	MFA 87 MFAF87 MF 87 MFF 87	4P
15	2630	97.89	1.15		
16	2370	88.01	1.25		
19	2050	76.39	1.45		
21	1840	68.40	1.65		
25	1530	56.75	1.95		
28	1350	50.36	2.2		
31	1220	45.28	2.3		
21	1790	66.46	0.85	MFA 77 MFAF77 MF 77 MFF 77	4P
24	1570	58.32	0.95		
26	1490	55.27	1.00		
29	1300	48.37	1.15		
33	1170	43.58	1.30		
37	1030	38.23	1.45		
42	910	33.74	1.65		
47	800	29.91	1.85		
56	685	25.54	2.1		
45	850	31.51	1.65		
49	775	28.75	1.85		
56	685	25.50	2.2		
66	575	21.43	2.6		
72	530	19.70	2.8		

Output speed (r/min)	Output torque (N.M)	Ratio (i)	Service Factor (fs)	Type	Motor Pole
4.0KW					
52	735	27.41	1.10	MFA 67 MFAF67 MF 67 MFF 67	4P
57	675	25.13	1.20		
64	595	22.05	1.40		
68	560	20.90	1.45		
78	490	18.29	1.64		
86	445	16.48	1.85		
98	390	14.46	2.1		
111	345	12.76	2.4		
126	305	11.31	2.7		
147	260	9.66	3.2		
156	245	9.08	2.2		
165	230	8.60	2.5		
189	205	7.53	3.0		
209	183	6.78	3.4		
239	160	5.95	3.8		
270	141	5.25	4.2		
305	125	4.66	4.5		
357	107	3.97	4.7		
5.5KW					
11	4680	127.42	0.90	WMFA 97 WMFAF97 WMF 97 WMFF 97	4P
13	4150	112.99	1.05		
14	3750	102.16	1.1		
15	3580	97.58	1.20		
16	3300	89.85	1.30		
17	3180	86.59	1.35		
18	2950	80.31	1.45		
19	2780	75.63	1.55		
20	2660	72.30	1.60		
22	2400	65.47	1.80		
25	2130	58.06	2.0		
27	1930	52.49	2.2		
16	3230	88.01	0.95	MFA 87 MFAF87 MF 87 MFF 87	4P
19	2810	76.39	1.05		
21	2510	68.40	1.20		
25	2080	56.75	1.45		
28	1850	50.36	1.60		
32	1660	45.28	1.70		
36	1440	39.30	1.90		
41	1290	35.19	2.0		
49	1070	29.20	2.3		
42	1250	33.92	2.1		
50	1060	28.78	2.3		
54	970	26.50	3.1		
60	870	23.68	3.5		
30	1780	48.37	0.85	MFA 77 MFAF77 MF 77 MFF 77	4P
33	1600	43.58	0.95		
37	1400	38.23	1.05		
42	1240	33.74	1.20		
48	1100	29.91	1.35		
56	940	25.54	1.55		
56	940	25.50	1.60		
67	785	21.43	1.90		
73	725	19.70	2.1		
82	645	17.49	2.3		
91	575	15.64	2.6		
102	515	14.06	2.9		
117	450	12.21	3.3		

Output speed (r/min)	Output torque (N.M)	Ratio (i)	Service Factor (fs)	Type	Motor Pole
5.5KW					
65	810	22.05	1.00	MFA 67 MFAF67 MF 67 MFF 67	4P
68	770	20.90	1.05		
78	670	18.29	1.20		
87	605	16.48	1.35		
99	530	14.46	1.55		
112	470	12.76	1.75		
126	415	11.31	1.95		
148	355	9.66	2.3		
158	335	9.08	1.60		
166	315	8.60	1.80		
190	275	7.53	2.2		
211	250	6.78	2.5		
240	220	5.95	2.8		
272	193	5.25	3.1		
307	171	4.66	3.3		
360	146	3.97	3.4		
7.5KW					
15	4890	97.58	0.90	WMFA 97 WMFAF97 WMF 97 WMFF 97	4P
16	4500	89.85	0.95		
17	4340	86.59	1.00		
18	4020	80.31	1.05		
19	3790	75.63	1.15		
20	3620	72.30	1.20		
22	3280	65.47	1.30		
25	2910	58.06	1.50		
27	2630	52.49	1.65		
32	2230	44.49	1.95		
37	1950	38.86	2.2		
44	1630	32.50	2.6		
33	2170	43.28	1.40		
39	1840	36.64	1.65		
42	1700	33.91	2.5		
47	1520	30.39	2.8		
25	2840	56.75	1.05	MFA 87 MFAF87 MF 87 MFF 87	4P
28	2520	50.36	1.15		
32	2270	45.28	1.25		
36	1970	39.30	1.40		
41	1760	35.19	1.50		
49	1460	29.20	1.70		
50	1440	28.78	1.70		
54	1330	26.50	2.3		
60	1190	23.68	2.5		
67	1070	21.32	2.8		
74	970	19.31	3.1		
84	860	17.12	3.5		
92	775	15.48	3.9		
42	1690	33.74	0.90	MFA 77 MFAF77 MF 77 MFF 77	4P
48	1500	29.91	1.00		
56	1280	25.54	1.15		
56	1280	25.50	1.15		
67	1070	21.43	1.40		
73	990	19.70	1.50		
82	880	17.49	1.70		
91	785	15.64	1.90		
102	705	14.06	2.1		
117	610	12.21	2.5		
131	545	10.93	2.7		
154	465	9.30	2.3		
173	415	8.26	2.6		
194	370	7.38	2.9		
215	335	6.64	3.2		
248	290	5.76	3.7		
277	260	5.16	4.2		
344	215	4.28	4.7		

Output speed (r/min)	Output torque (N.M)	Ratio (i)	Service Factor (fs)	Type	Motor Pole
11.0KW					
22	4780	65.47	0.90	WMFA 97 WMFAF97 WMF 97 WMFF 97	4P
25	4240	58.06	1.00		
27	3830	52.49	1.10		
32	3250	44.49	1.30		
37	2830	38.86	1.50		
44	2370	32.50	1.80		
42	2470	33.91	1.75		
47	2220	30.39	1.95		
52	2000	27.44	2.2		
58	1820	24.92	2.4		
65	1610	22.11	2.7		
37	2870	39.30	0.95	MFA 87 MFAF87 MF 87 MFF 87	4P
41	2570	35.19	1.00		
49	2130	29.20	1.20		
54	1930	26.50	1.55		
61	1730	23.68	1.75		
68	1560	21.32	1.95		
75	1410	19.31	2.1		
84	1250	17.12	2.4		
93	1130	15.48	2.7		
110	960	13.12	3.1		
73	1440	19.70	1.05	MFA 77 MFAF77 MF 77 MFF 77	4P
82	1280	17.49	1.20		
92	1140	15.64	1.30		
102	1030	14.06	1.45		
118	890	12.21	1.70		
132	795	10.93	1.90		
155	680	9.30	1.60		
174	605	8.26	1.80		
195	540	7.38	2.0		
217	485	6.64	2.2		
250	420	5.76	2.6		
279	375	5.16	2.9		
336	310	4.28	3.2		
15.0KW					
33	4360	44.49	1.00	WMFA 97 WMFAF97 WMF 97 WMFF 97	4P
38	3810	38.86	1.15		
45	3190	32.50	1.35		
43	3330	33.91	1.30		
48	2980	30.39	1.45		
53	2690	27.44	1.60		
59	2450	24.92	1.75		
66	2170	22.11	2.0		
73	1970	20.07	2.2		
85	1690	17.25	2.5		
97	1480	15.06	2.9		
114	1250	12.77	3.4		
131	1100	11.16	3.7		
55	2600	26.50	1.15	MFA 87 MFAF87 MF 87 MFF 87	4P
62	2320	23.68	1.30		
68	2090	21.32	1.45		
76	1890	19.31	1.60		
85	1680	17.12	1.80		
94	1520	15.48	2.0		
111	1290	13.12	2.3		
127	1120	11.46	2.7		
152	940	9.58	3.1		
176	810	8.30	1.90		
199	720	7.35	2.1		
220	650	6.65	2.3		
259	555	5.63	2.8		
297	485	4.92	3.2		
355	405	4.12	3.6		

Output speed (r/min)	Output torque (N.M)	Ratio (i)	Service Factor (fs)	Type	Motor Pole
18.5KW					
38	4690	38.86	0.90	WMFA 97 WMFAF97 WMF 97 WMFF 97	4P
45	3920	32.50	1.10		
53	3310	27.44	1.30		
59	3010	24.92	1.45		
66	2670	22.11	1.60		
73	2420	20.07	1.80		
85	2080	17.25	2.1		
97	1820	15.06	2.4		
115	1540	12.77	2.8		
131	1350	11.16	3.0		
69	2570	21.32	1.15	MFA 87 MFAF87 MF 87 MFF 87	4P
76	2330	19.31	1.30		
86	2060	17.12	1.45		
95	1870	15.48	1.60		
112	1580	13.12	1.90		
128	1380	11.46	2.2		
153	1160	9.58	2.5		
177	1000	8.30	1.55		
199	890	7.35	1.75		
220	800	6.65	1.90		
260	680	5.63	2.2		
298	595	4.92	2.6		
356	495	4.12	2.9		
22KW					
53	3940	27.44	1.10	WMFA 97 WMFAF97 WMF 97 WMFF 97	4P
59	3570	24.02	1.20		
66	3170	22.11	1.35		
73	2880	20.07	1.50		
85	2470	17.25	1.75		
97	2160	15.06	2.0		
115	1830	12.77	2.3		
131	1600	11.16	2.6		
30KW					
66	4310	22.11	1.00	WMFA 97 WMFAF97 WMF 97 WMFF 97	4P
73	3910	20.07	1.10		
85	3360	17.25	1.30		
98	2930	15.06	1.45		
115	2490	12.77	1.75		
132	2180	11.16	1.96		
162	1770	9.06	1.35		
179	1600	8.22	1.45		
208	1380	7.07	1.70		
238	1200	6.17	1.85		
281	1020	5.23	2.1		
321	890	4.57	2.3		

WMF37



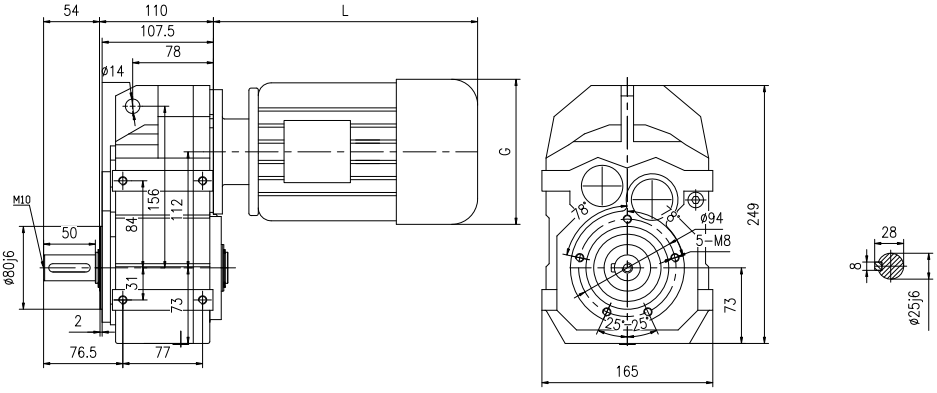

WMFA37



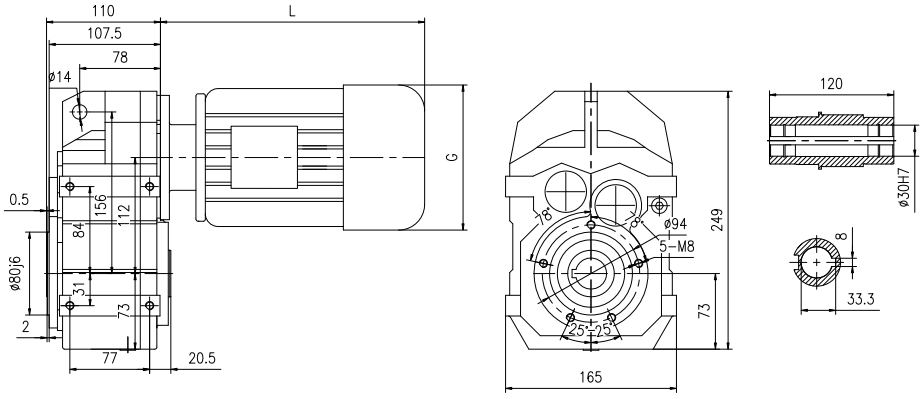

WMFF37



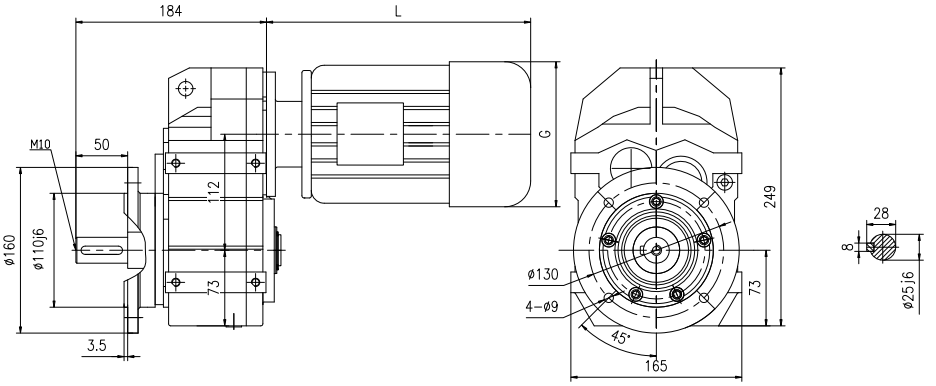

WMFAF37



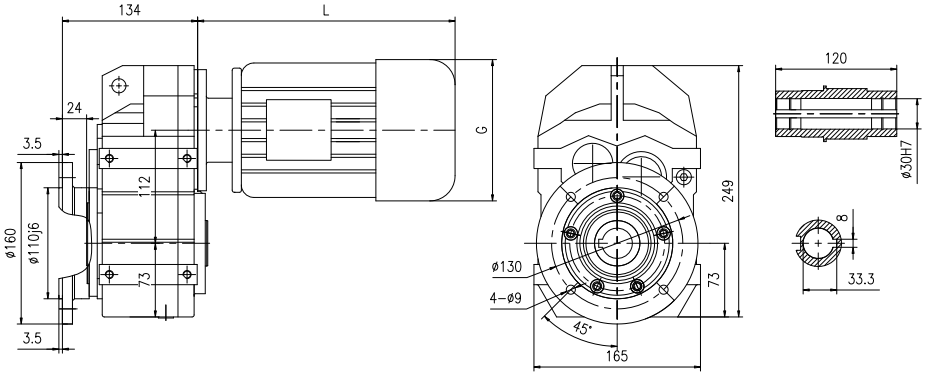

WMFAF37

WMFAZ37



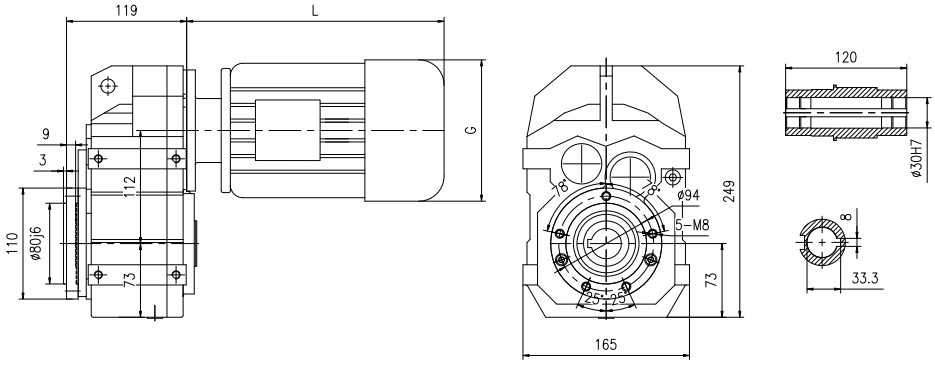

WMF..S37



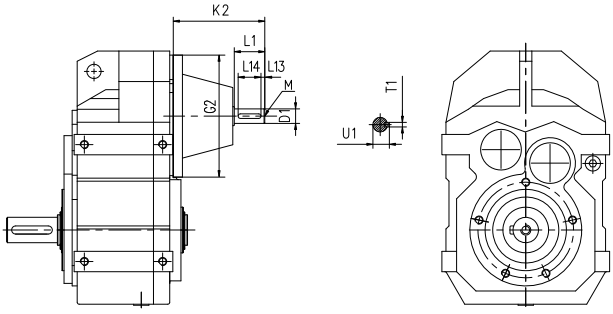

Input Shaft Kit	D1	G2	K2	L1	L13	L14	M	T1	U1
AD1 (Φ120)	Φ16k6	Φ120	102	40	4	32	M5	5	18
AD2 (Φ120)	Φ19k6		129	40	4	32	M6	6	21.5

WMF47

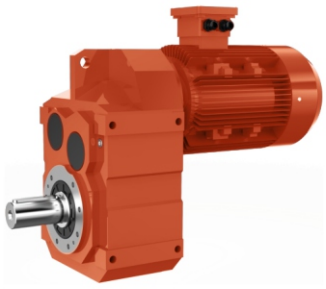

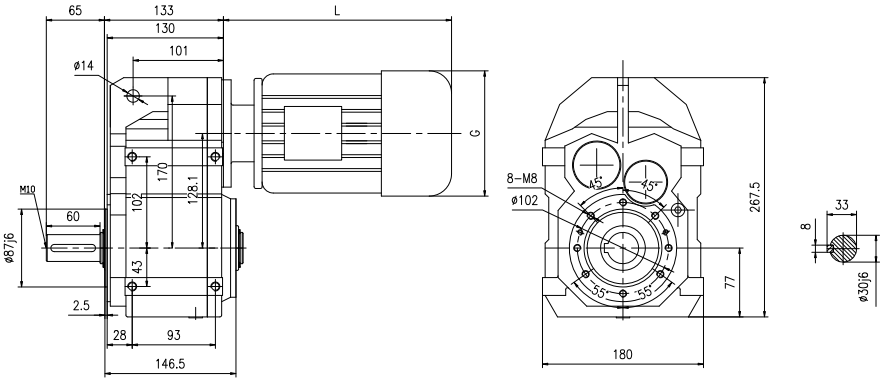

WMFA47



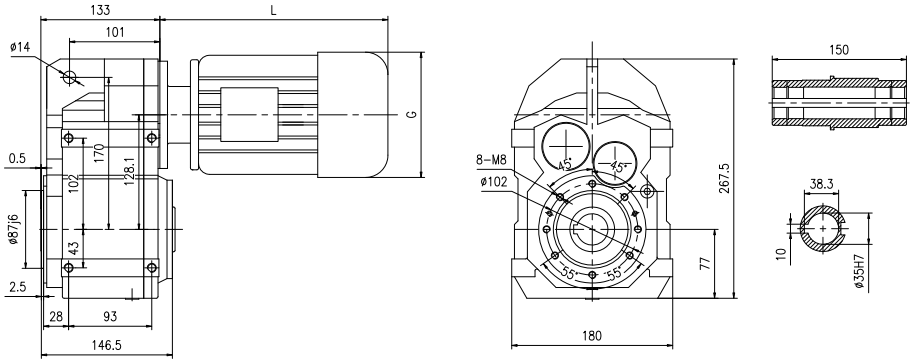

WMFF47

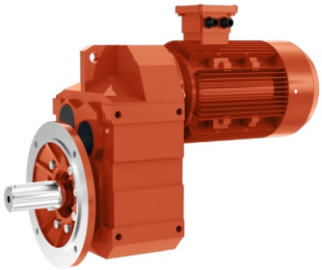

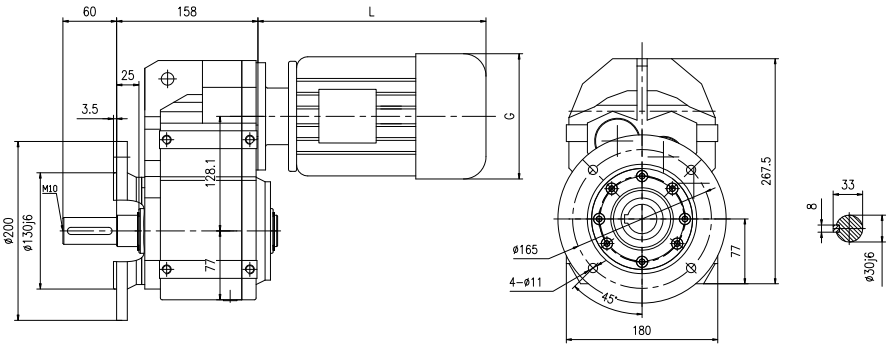

WMFAF47



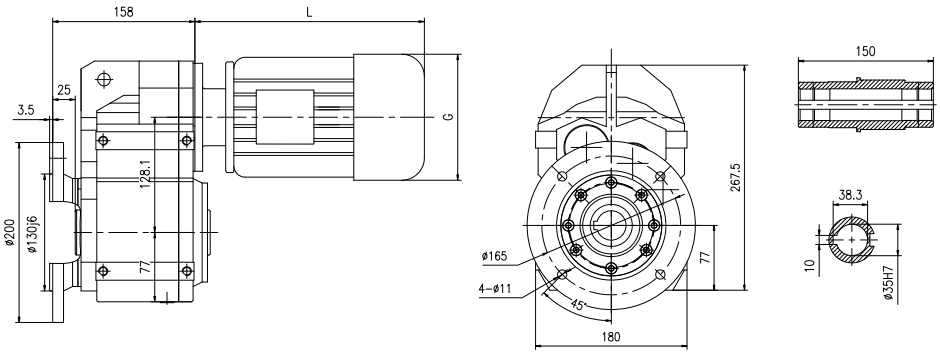

WMFAZ47



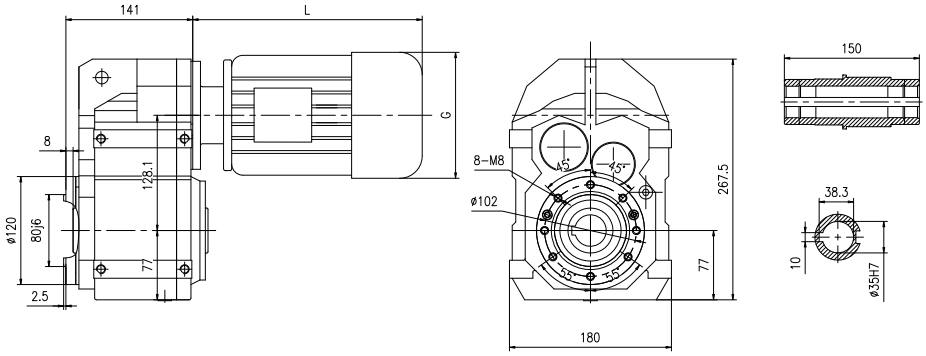

WMF..S47



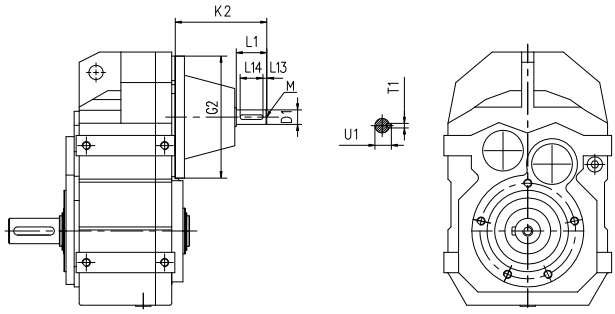

Input Shaft Kit	D1	G2	K2	L1	L13	L14	M	T1	U1
AD1 (Φ120)	Φ16k6	Φ120	102	40	4	32	M5	5	18
AD2 (Φ120)	Φ19k6		129	40	4	32	M6	6	21.5

MF67

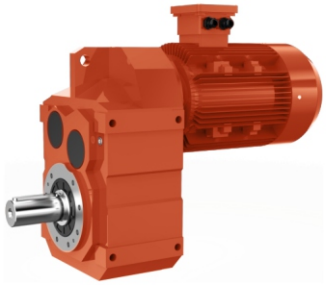

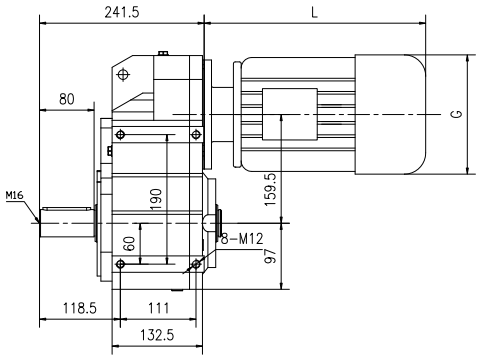

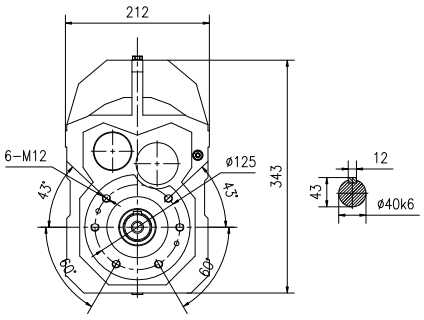

MFA67



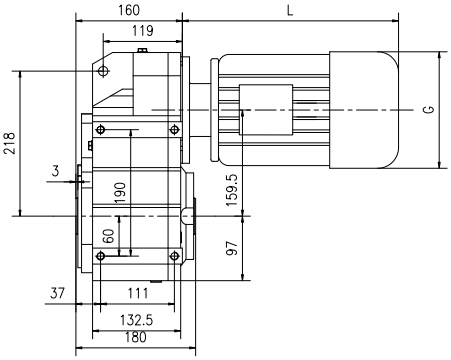

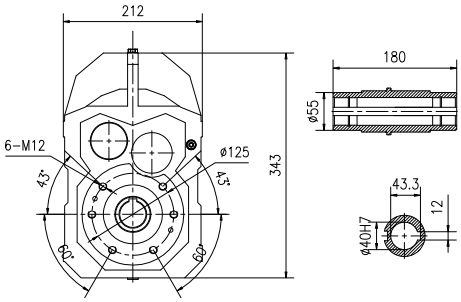

MFF67

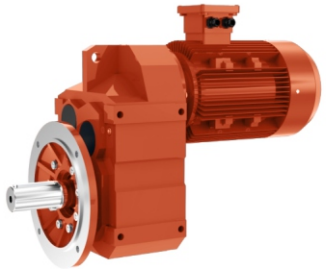

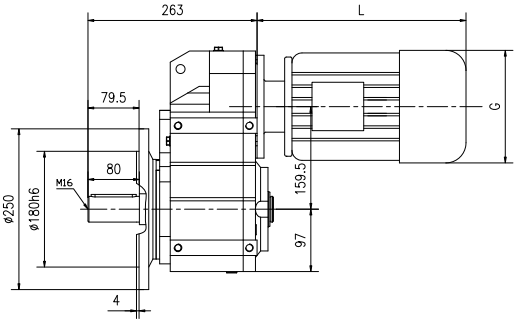

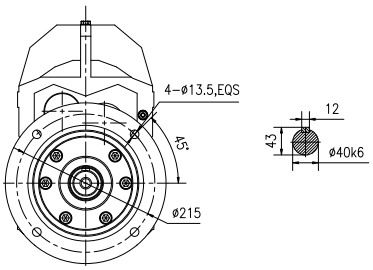

MFAF67



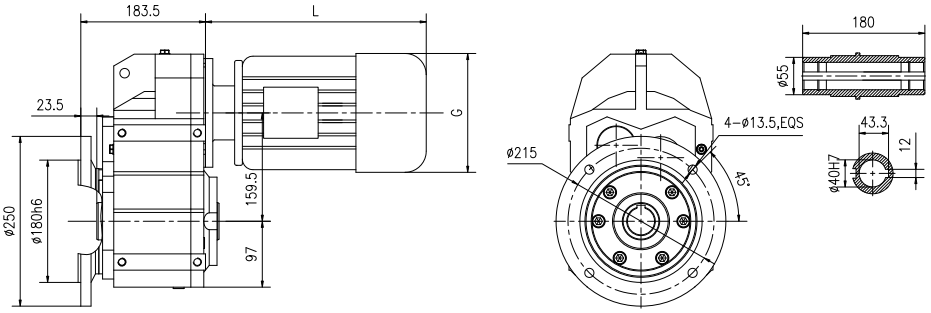

MFAZ67



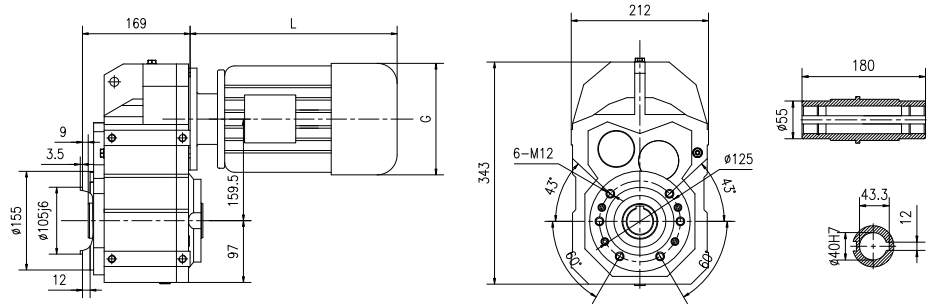

MF..S67



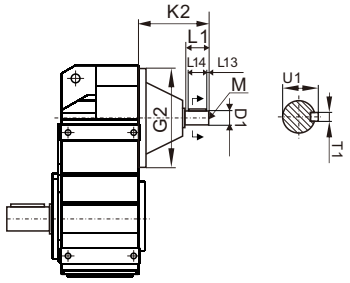

Input Shaft Kit	D1	G2	K2	L1	L13	L14	M	T1	U1
AD2 (Φ160)	Φ19k6	Φ160	123	40	4	32	M6	6	21.5
AD3 (Φ160)	Φ24k6		159	50	5	40	M8	8	27

MF77

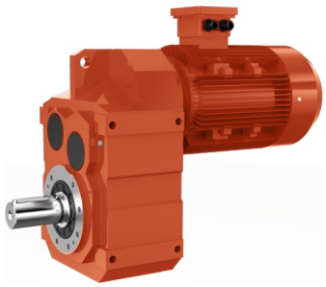

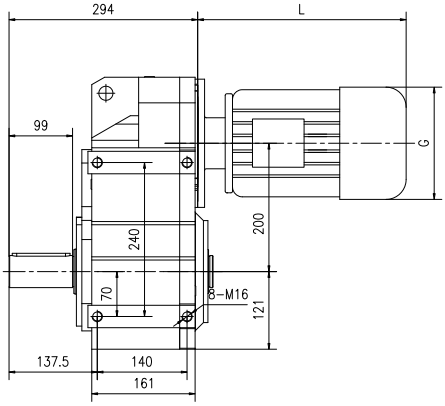

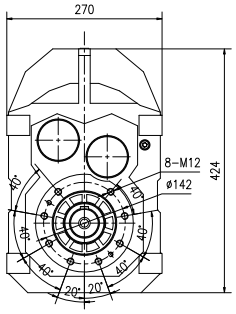

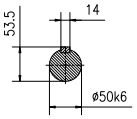

MFA77



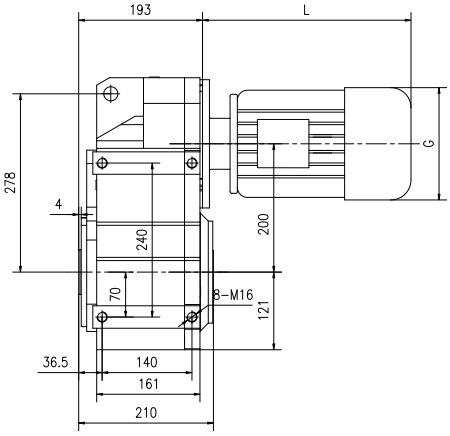

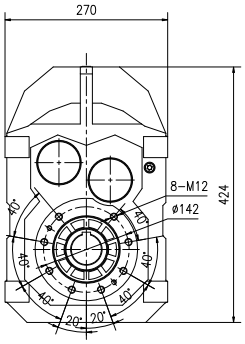

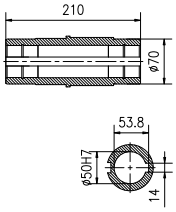

MFF77

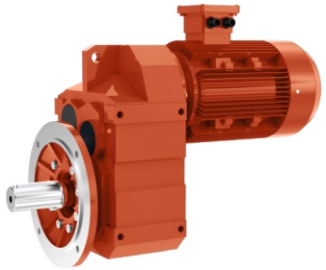

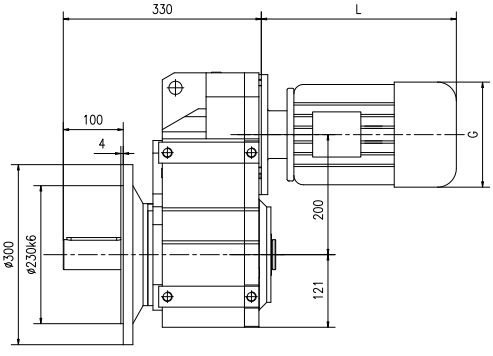

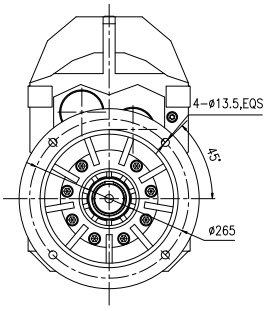

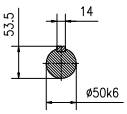

MFAF77



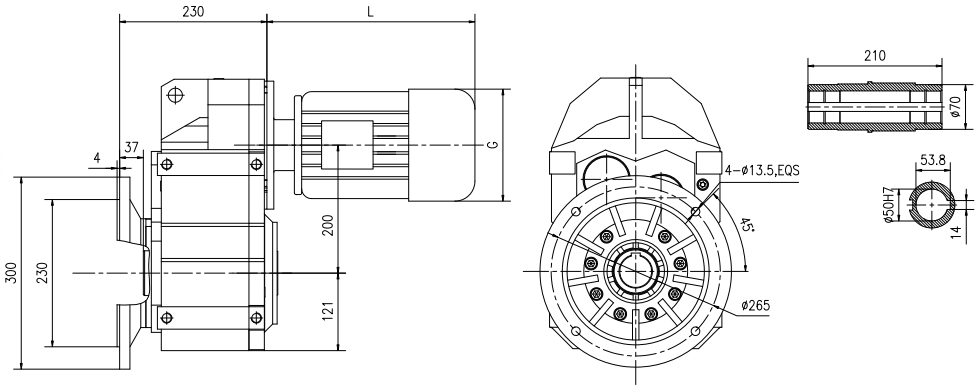

MFAZ77



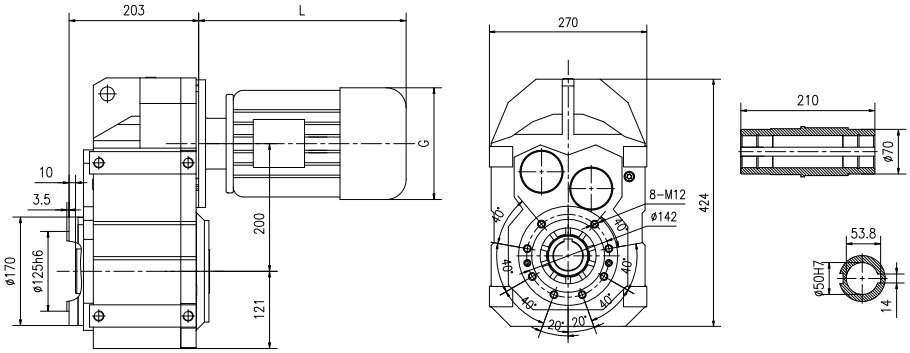

MF..S77



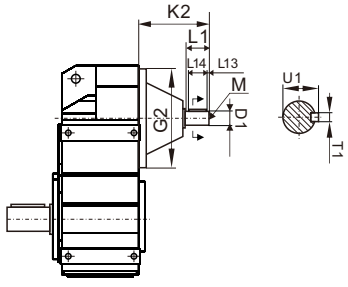

Input Shaft Kit	D1	G2	K2	L1	L13	L14	M	T1	U1
AD2 (Φ200)	Φ19k6	Φ200	115	40	4	32	M6	6	21.5
AD3 (Φ200)	Φ24k6		151	50	5	40	M8	8	27
AD4 (Φ200)	Φ38k6		224	80	7	70	M12	10	41

MF87

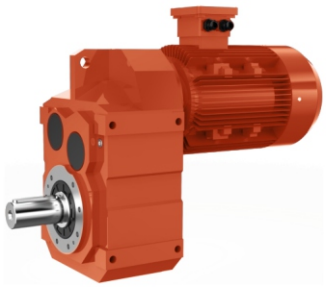

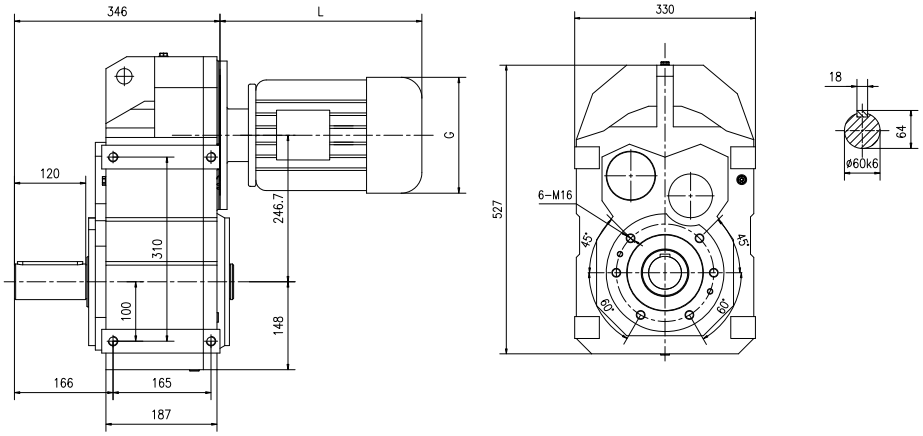

MFA87



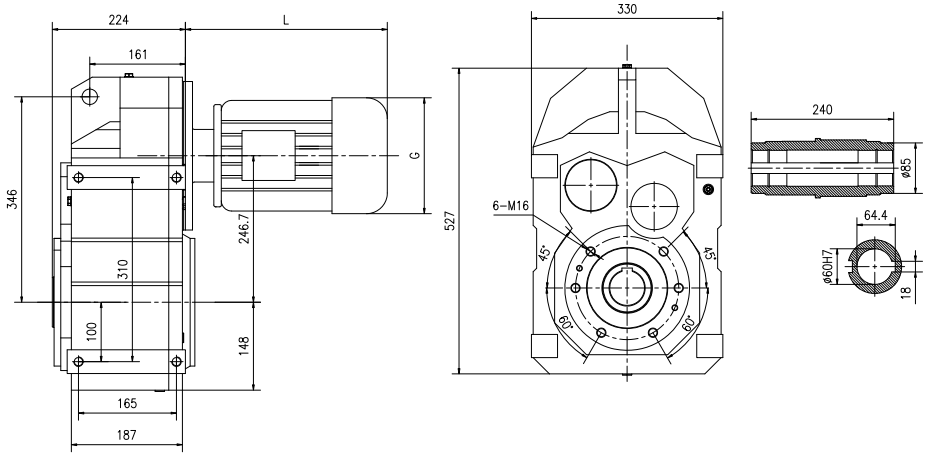

MFF87

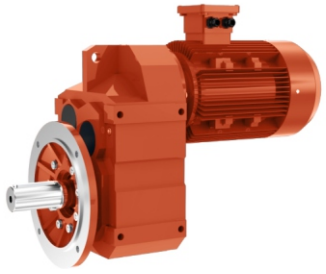

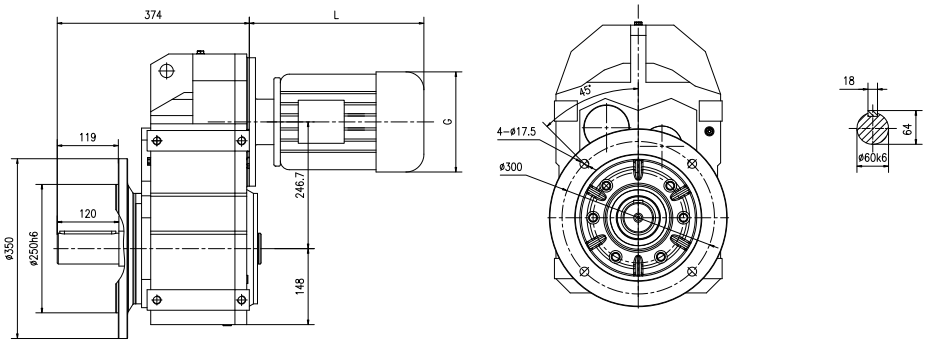

MFAF87



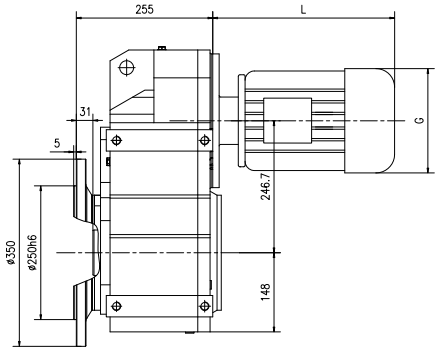

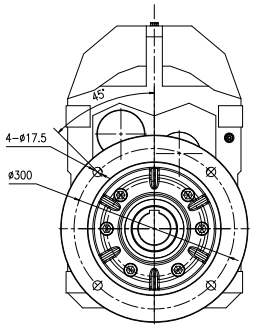

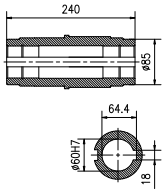

MFAZ87



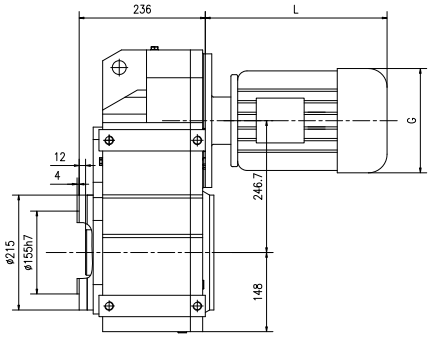

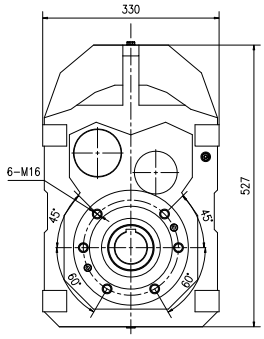

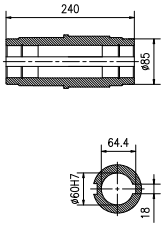

MF..S87



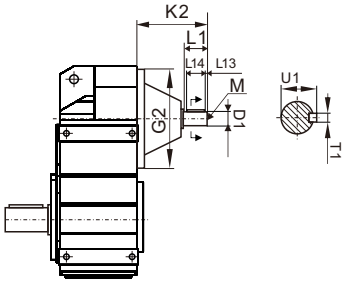

Input Shaft Kit	D1	G2	K2	L1	L13	L14	M	T1	U1
AD2 (Φ250)	Φ19k6	Φ250	110	40	4	32	M6	6	21.5
AD3 (Φ250)	Φ28k6		156	60	5	50	M10	8	31
AD4 (Φ250)	Φ38k6		219	80	7	70	M12	10	41
AD5 (Φ250)	Φ42k6		292	110	10	70	M16	12	45

WMF97

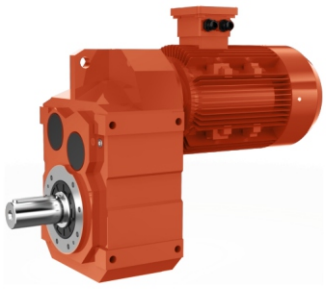

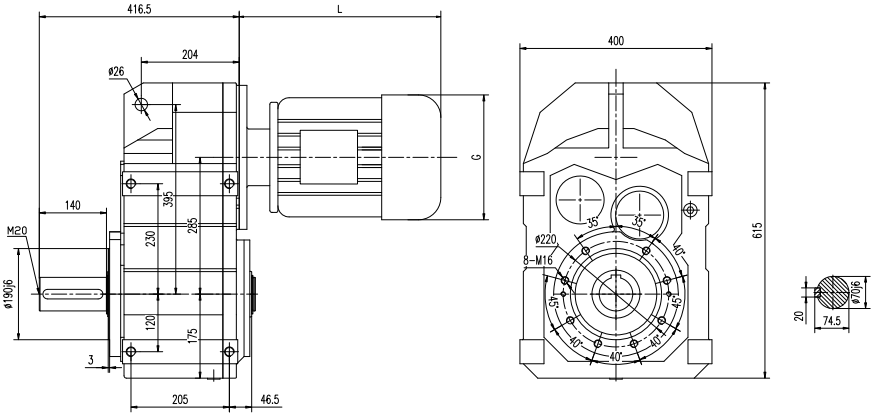

WMFA97



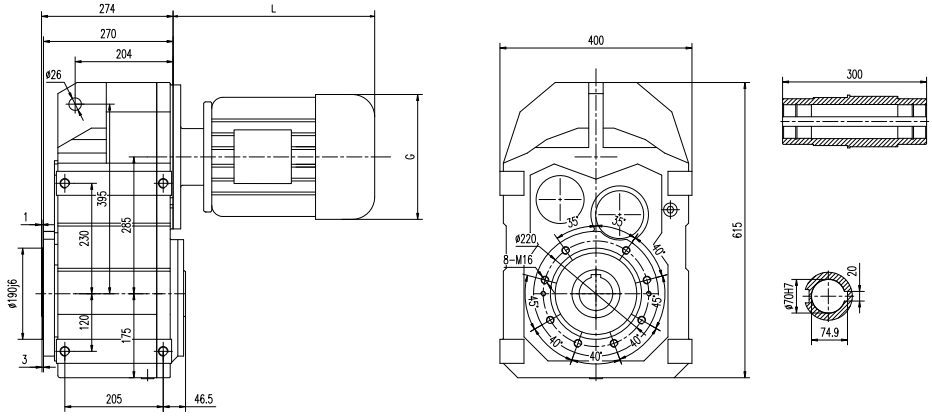

WMFF97

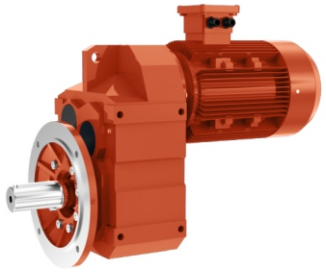

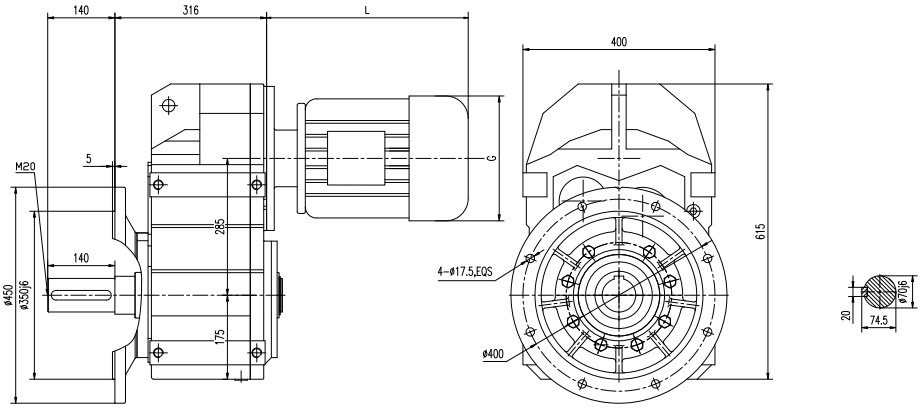

WMFAF97



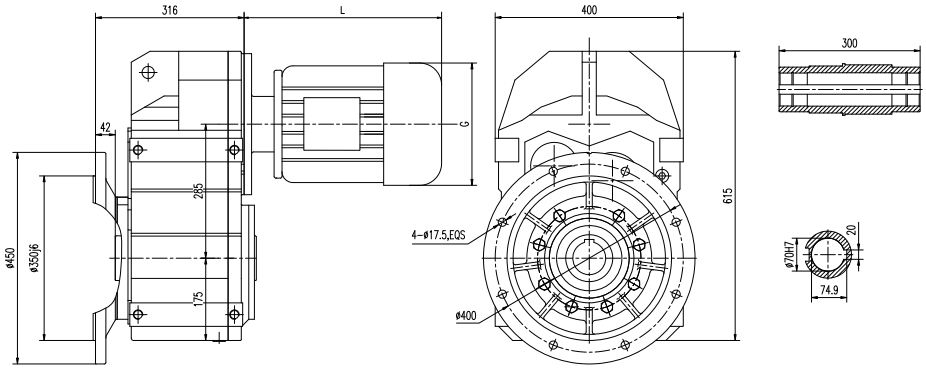

WMFAZ97



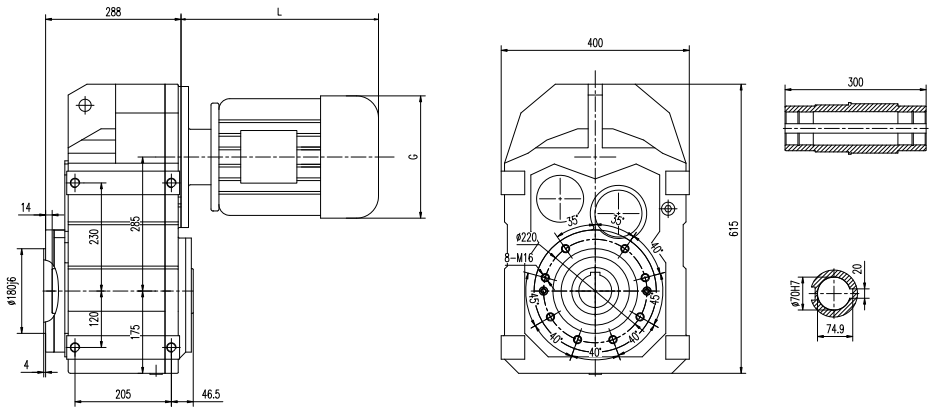

WMF..S97



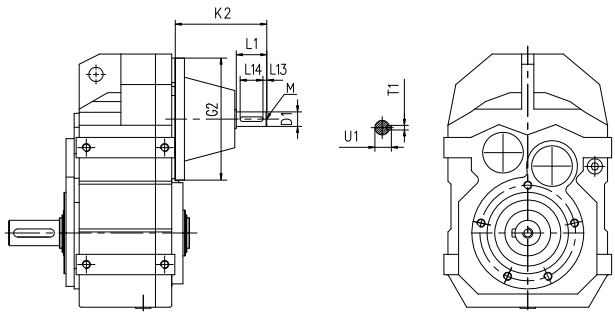

Input Shaft Kit	D1	G2	K2	L1	L13	L14	M	T1	U1
AD3 (Φ300)	Φ28k6	Φ300	151	60	5	50	M10	8	31
AD4 (Φ300)	Φ38k6		214	80	7	70	M12	10	41
AD5 (Φ300)	Φ42k6		287	110	10	70	M16	12	45
AD6 (Φ300)	Φ48k6		327	110	10	80	M16	14	51.5

MFA Series Installation Direction Diagram

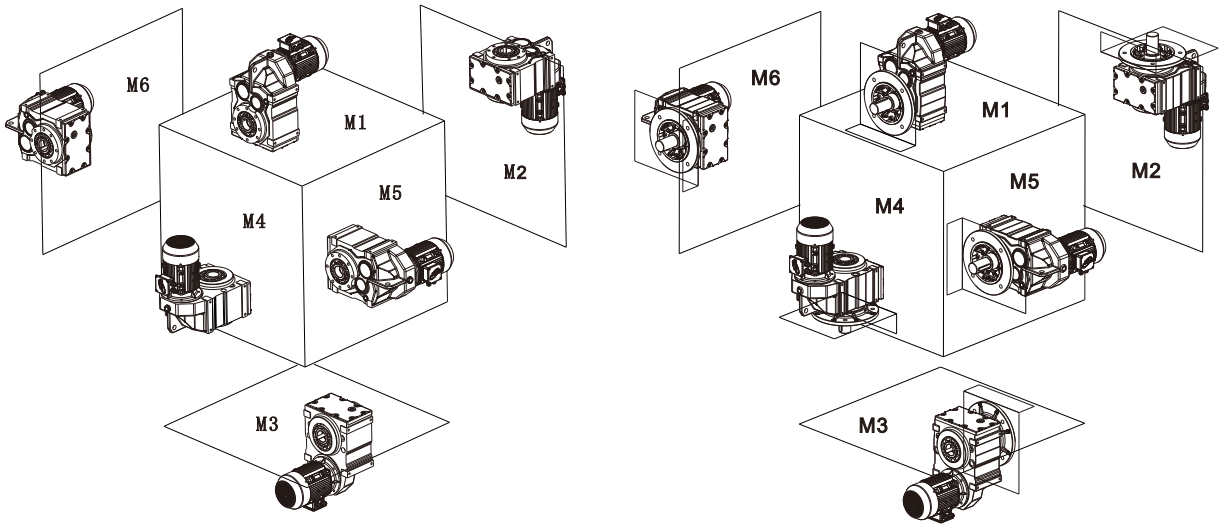

MFA Series Oil Capacity Table (Unit:kg)

Models \ Mounting Position	M1	M2	M3	M4	M5	M6
MFA37	1.4	5	1.2	1.6	1.3	1.3
MFA47	1.6	1.9	1.6	1.8	1.6	1.6
MFA67	2.8	2.8	2.1	3.1	2	2
MFA77	4.5	4	4.5	5.5	4.3	4.4
MFA87	11	9	8.7	15.0	8.5	8.7
MFA97	16.4	17.5	12.0	21.5	14.8	14

MF/MFAB37-97 Mounting Position Example

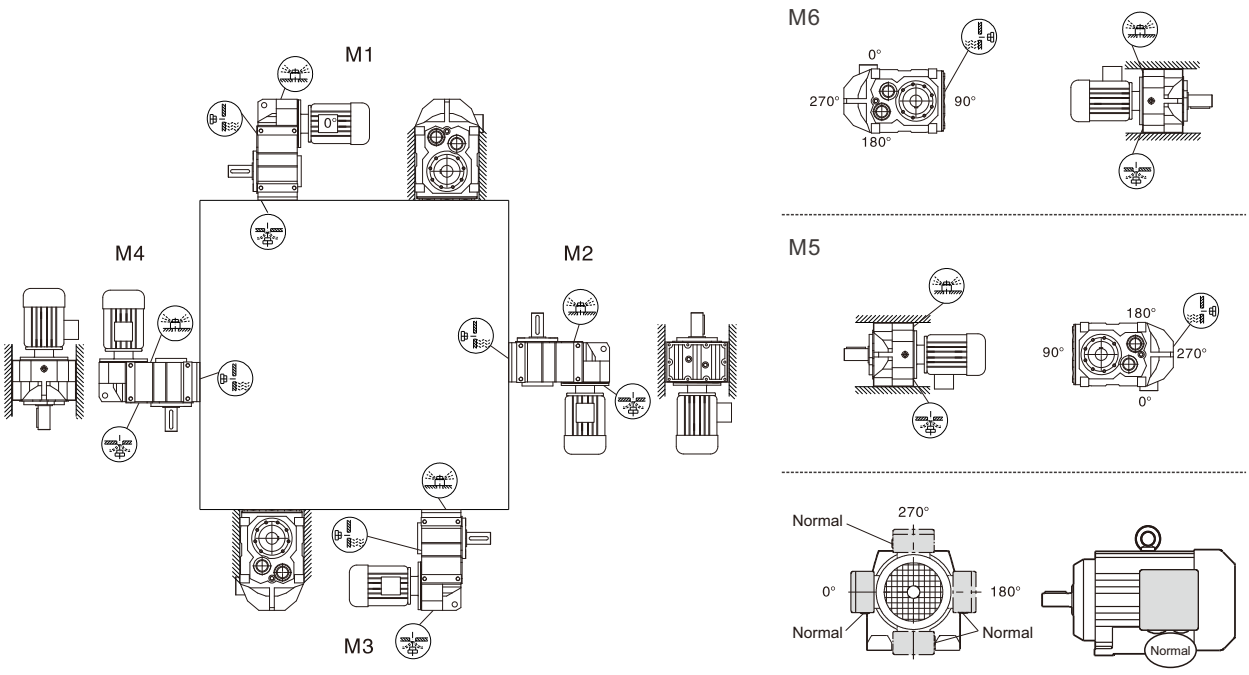

MF/MFAT37-97 Mounting Position Example

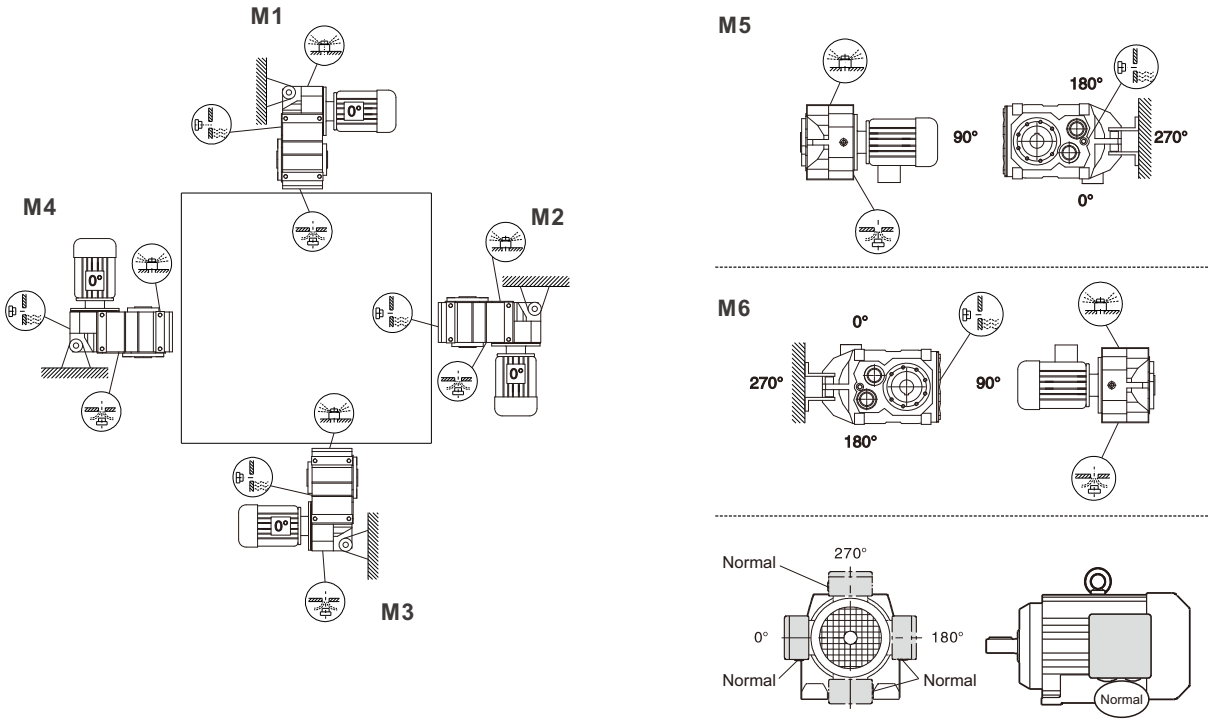

MFF/MFAF/MFAZ37-97 Mounting Position Example

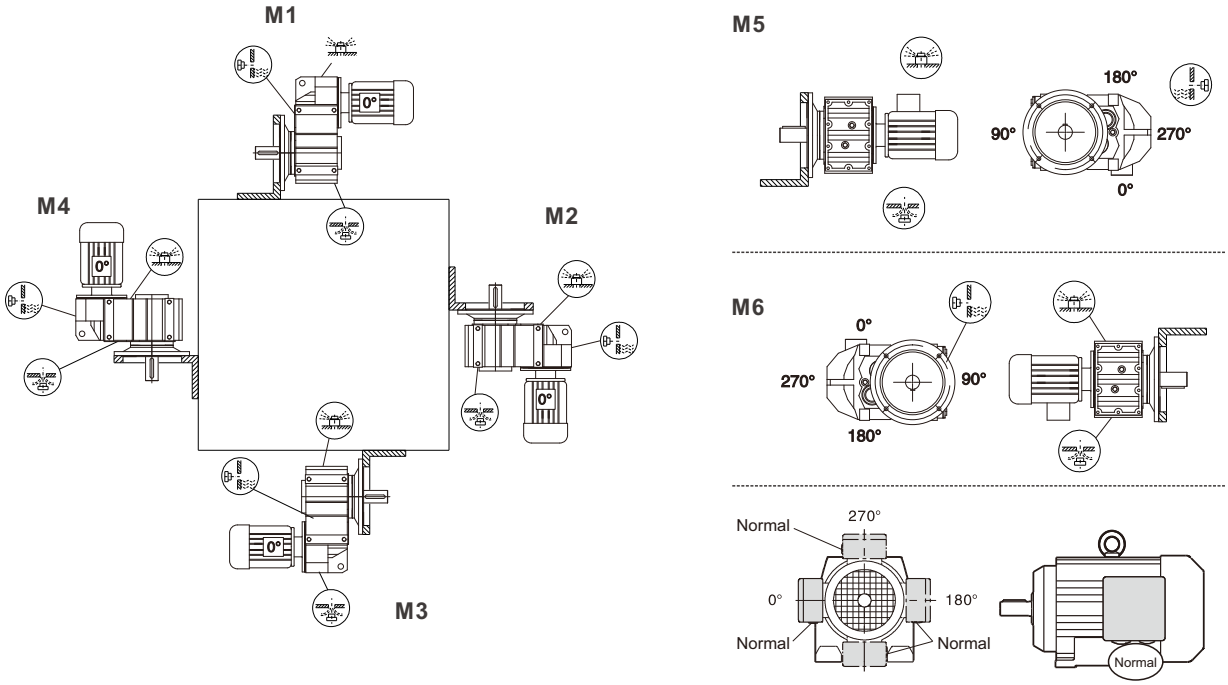

NOTE

NOTE

ZHEJIANG WUMA DRIVE CO.,LTD.

Add:
No. 10, Xiangcun Industrial Zone, Dongyuan Town,
Qingtian County, Lishui City, Zhejiang, China
323900

Foreign Trade Department:
0577-56782096

E-mail: wuma@zjwuma.com
zjwuma@zjwuma.com

www.wumadrive.com