WUMA 午马传动
Dreams drive the future!

Hypoid Gearbox Selection Catalogue

WKM准双曲面减速机

2026C

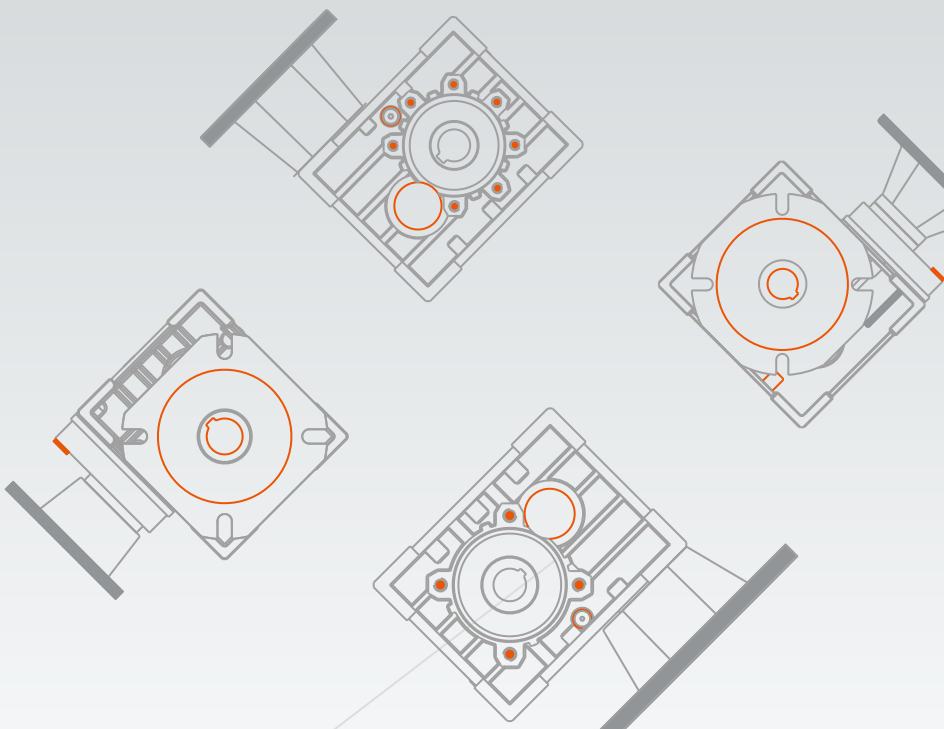

SINCE 1995



RELIABLE MOTION SMARTER FUTURE

面积 Area **60,000m²**

历史 Experience **30+year**

技术人员 Technicians **30+**

员工 Employees **300+**

年产量 Annual Output Units **500,000**

浙江午马传动有限公司经营发展渊源可追溯至1995年。三十余年来，公司始终专注于减速机与精密传动领域，持续积累研发、制造与行业应用经验。

2021年，公司完成主体升级，成立浙江午马传动有限公司，延续“午马（WUMA）”品牌发展体系，开启智能制造与高质量发展新阶段。

公司围绕工业传动应用需求，形成以RV系列蜗轮蜗杆减速机、R/K/F/S系列硬齿面斜齿轮减速机、准双曲面减速机等为核心的系列化、模块化产品体系，拥有10余个产品系列、数千种规格型号，为食品包装、环保设备、仓储物流、智能制造等行业提供可靠传动解决方案。

依托数字化制造体系、精密加工能力和完善的质量管理体系，公司持续提升产品可靠性与交付能力。从产品出海迈向品牌出海，公司遵循着1+N的生产经营模式，构建全球协同的制造与交付网络。

未来，午马传动将持续深化技术创新与智能制造升级，以可靠传动赋能高效生产，致力于打造一流的中国减速机出口企业与一流的中国减速机品牌——可靠传动，智启未来。







愿景 VISION

成为全球一流的智能传动方案引领者

使命 MISSION

让传动更可靠，让生产更高效

价值观 VALUES

共创共享 Win-win Together	至诚至信 Mutual Trust
精益求精 Ultimate Excellence	使命必达 Accountability

Smart Workshop
智能化车间











QUALITY









Digital Factory
数字化工厂



CONTENTS 目录

Page		
2	▶ **概述**	SUMMARIZE
3-4	▶ **产品结构图**	PRODUCT STRUCTURE PICTURE
5-7	▶ **型号说明**	MODEL ILLUMINATE
8-12	▶ **型号相关参数**	RELEVANT PARAMETER
13	▶ **选型举例**	SELECTION EXAMPLE
	◀ **减速器选型表**	GEAR UNIT SELECTION TABLES
14-16	▶ **减速器组合表**	POSSIBLE GEOMETRICAL COMBINATIONS
17-32	▶ **WKM 性能参数表**	WKM PERFORMANCE PARAMETER
	◀ **外形尺寸图表**	OUTLINE DIMENSION SHEET
33-40	▶ **WKM...外形尺寸**	WKM.. OUTLINE DIMENSION
41	▶ **WKMS 轴输入外形尺寸**	WKMS OUTLINE DIMENSION OF SHAFT INPUT
41-42	▶ **附件**	ACCESSORIES
42	▶ **旋转方向**	DIRECTION OF ROTATION
43	▶ **安装**	INSTALLATION
44	▶ **安装方法**	INSTALLATION METHODS
	◀ **润滑油**	LUBRICANTS
45	▶ **润滑油型号**	TYPES OF LUBRICANTS
45	▶ **润滑剂加注量**	LUBRICANT VOLUME
46	▶ **维护**	MAINTENANCE
47	▶ **存放**	STORAGE
47	▶ **定货须知**	NOTICE FOR ORDER
48	▶ **运转故障**	MULFUNCTIONS
49-50	▶ **减速器负载特征表**	CHARGE CHARACTERISTIC CHART

产品图片 / PRODUCT PICTURE



WKM50B~90B

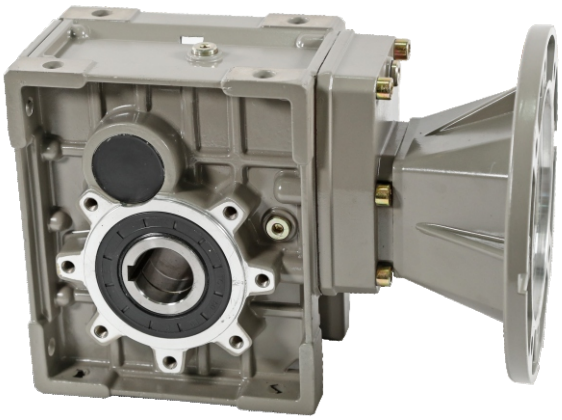

WKM50C~90C

1. 概述　SUMMARIZE

1.1 产品特点　Products characteristics

①. 方箱外形，优质铝合金压铸箱体，美观大方。

②. 散热性能优良，承载能力大。

③. 多面安装、空心输出轴结构，另配有各种输入、输出方式、并能方便的与其它传动机械组合，适应性强。

④. 机型小巧、结构紧凑，体积小、重量轻，节省安装空间。

⑤. 传动平稳、噪音小。

⑥. 安全可靠、经济耐用。

①.High quality Aluminum alloy, appearance elegant.

②.Good heat dissipation capacity, high carrying ability.

③.Installed in multi-surfaces,hollow output shaft, various input and output type, connect with other transmission machinery easily.

④.Small size, compact structure, light weight and output type, conjoin other transmission machinery easily.

⑤.Run steadily and low nosie.

⑥.High reliability and high effiliency.

1.2 主要零件的技术方法　Technical method of main parts

①. 压铸箱体,三维设计有限元分析,铝合金压铸在保证加工精度的同时,提高箱体的强度与刚度;

②. 齿轮:20CrMnTi，渗碳淬火，磨齿精度达6级以上,齿形、齿向修形,提高减速机的承载能力及啮合的平稳性。

①.Die-casting Housing, 3D design with analysis,aluminum alloy die-casting could make sure processing precision, as well as strongness and rigidity of housing ;

②.helical Gear :20CrMnTi,carbonize & quencher heat treatment, precision level of gear grinding could reach above 6 grade, correction of gear shape and tooth curve, which could enhance the bearing capacity and stability of mesh.

1.3 壳体表面处理　Surface painting

铝合金外壳:

①.壳体压铸后喷丸处理,保证表面光洁;

②.钝化处理后喷塑,美观且提高耐腐蚀性。

Aluminum alloy housing:

①.Shot blasting on the surface, after die-casting of housing.

②.Make plastic spray coating after passivation treatment on housing, which looks good and enhance corrision resistance.

2. 产品构造原理 / Basic structure

2.1. WKM...B 结构图/ WKM...B Basic structure

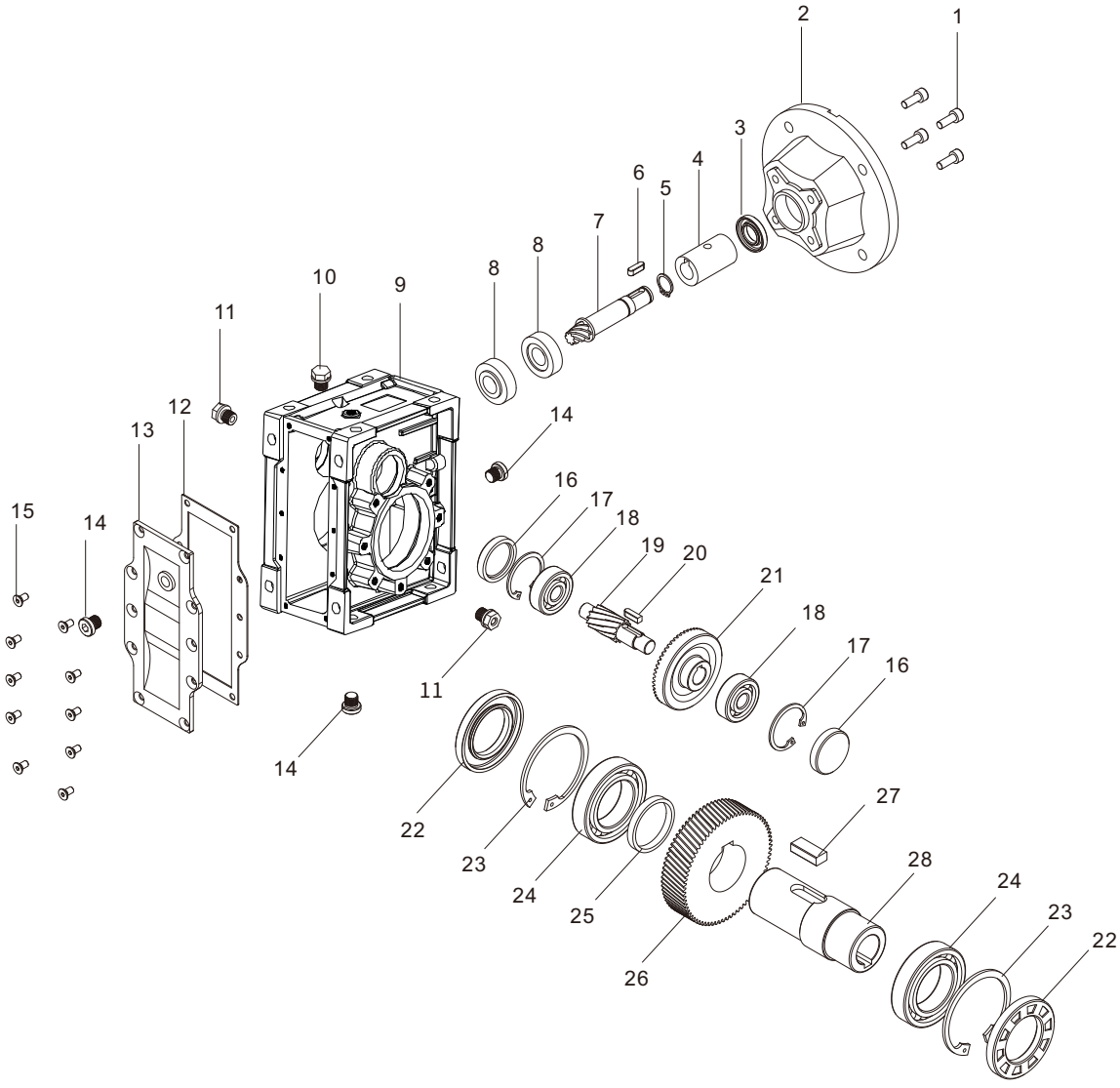

1	内六角螺钉 / Inner hex screw	11	油镜塞 / oil plug	21	齿轮 / gear
2	输入法兰 / Intput flange	12	橡胶垫 / Rubber gasket	22	油封 / Oil seal
3	油封 / Oil seal	13	后盖 / Cover	23	孔用挡圈 / Hole-circlip
4	输入轴套 / Intput adaptor	14	放油塞 / Oil drain plug	24	轴承 / Bearing
5	轴用挡圈 / Shaft-circlip	15	内六角沉头螺钉 / Hexagon sunk screw	25	定距环 / Distance collar
6	键 / Key	16	密封端盖 / Seal cover	26	齿轮 / gear
7	齿轮轴 / Gear shaft	17	孔用挡圈 / Hole-circlip	27	键 / Key
8	轴承 / Bearing	18	轴承 / Bearing	28	输出轴 / Hollow shaft
9	箱体 / Housing	19	齿轮轴 / Gear shaft		
10	通气帽 / Breather	20	键 / Key		

2.2. WKM...C 结构图/ WKM...C Basic structure

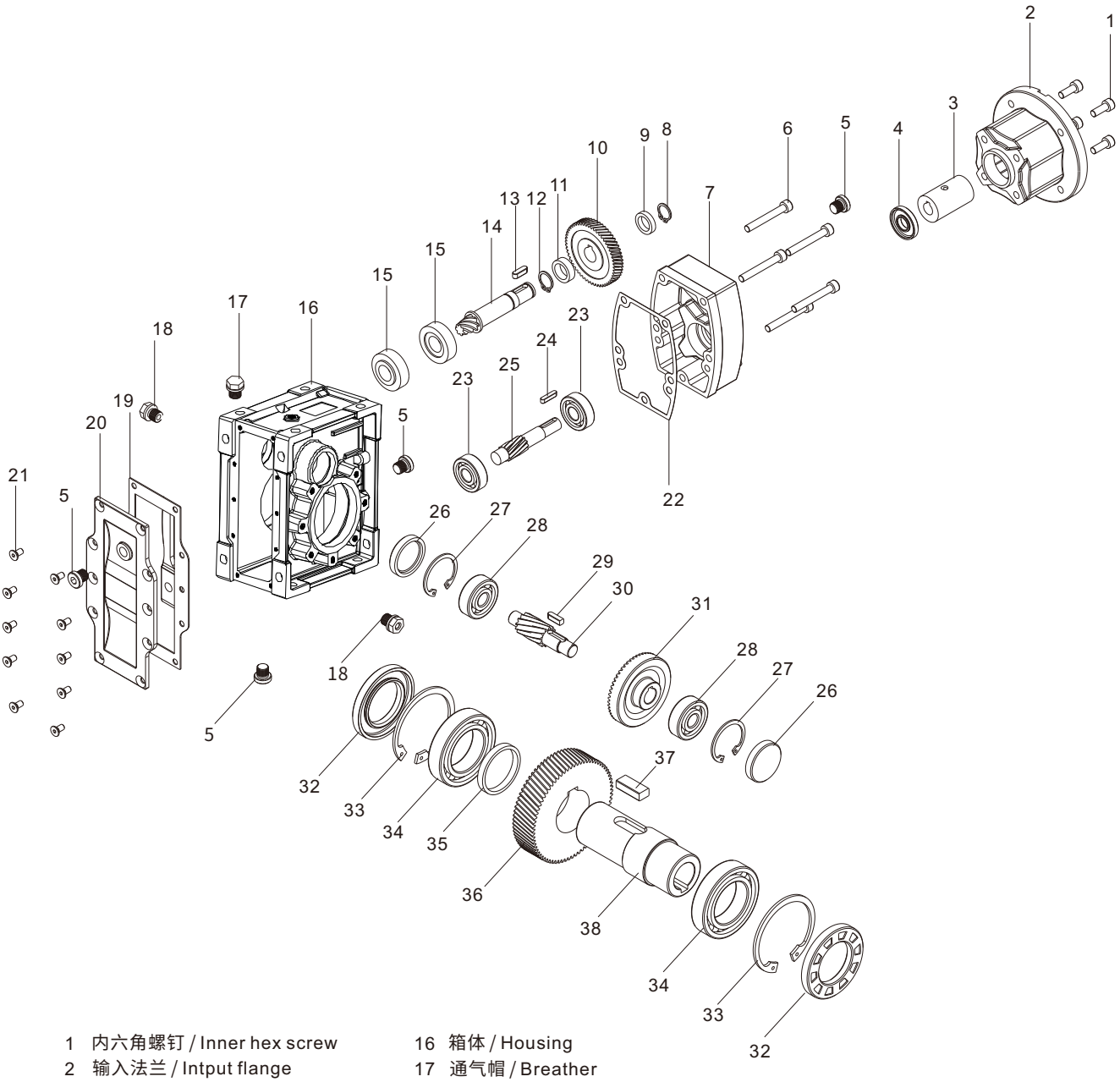

1 内六角螺钉 / Inner hex screw
2 输入法兰 / Intput flange
3 输入轴套 / Intput adaptor
4 油封 / Oil seal
5 放油塞 / Oil drain plug
6 内六角螺钉 / Inner hex screw
7 输入法兰座 / Intput flange holder
8 轴用挡圈 / Shaft-circlip
9 定距环 / Distance collar
10 齿轮 / gear
11 定距环 / Distance collar
12 轴用挡圈 / Shaft-circlip
13 键 / Key
14 齿轮轴 / Gear shaft
16 箱体 / Housing
17 通气帽 / Breather
18 油镜塞 / Oil level plug
19 橡胶垫 / Rubber gasket
20 后盖 / Cover
21 内六角沉头螺钉 / Hexagon sunk screw
22 密封纸垫 / Housing gasket
23 轴承 / Bearing
24 键 / Key
25 齿轮轴 / Gear shaft
26 密封端盖 / Seal cover
27 孔用挡圈 / Hole-circlip
28 轴承 / Bearing
29 键 / Key
31 齿轮 / gear
32 油封 / Oil seal
33 孔用挡圈 / Hole-circlip
34 轴承 / Bearing
35 定距环 / Distance collar
36 齿轮 / gear
37 键 / Key
38 输出轴 / Hollow shaft

3. 标记方式 / Model designation

WKMS 50 B - 12.5 - Y0.25-4 or 71B5- DZ1 -B3-1
① ② ③ ④ ⑤ ⑥ ⑦ ⑧

No	说　明	Comments
1	1.WKM:带输入法兰式减速机 2.WKMS:输入轴式减速机	1.WKM:With input flange 2.WKMS:With input shaft
2	减速器规格代号: 50、63、75、90	Specification code of gear units 50、63、75、90
3	1.B: 表示2级传动 2.C: 表示3级传动	1.B:Means 2 stages 2.C:Means 3 stages
4	减速器速比: i=12.5	Reducer Ratio: i=12.5
5	1.配输入法兰,配电机:Y0.25-4 2.配输入法兰,不配电机:71B5	1.With input flange and electric motor: Y0.25-4 2.With input flange,without electric motor:71B5
6	1.配输出轴:DZ1,DZ2,SZ 2.配输出法兰:FA1,FA2 3.配扭力臂:TA1,TA2 (见第7页)	1.With output shaft:DZ1, DZ2, SZ 2.With output flange:FA1, FA2 3.With torque arm:TA1, TA2 (see page 7)
7	安装方位代号 (见第8页)	Installation position code (see page 8)
8	电机接线盒位置 (见第8页)	Position of motor terminal box (see page 8)

订单时请说明是否带电机，一般按不带电机供应。
when ordering, you should show whether the reducers are equipped with motors, otherwise reducers aren't supplied with motors.

示例 EXAMPLE: WKM63B - 40 - Y0.25-4 -DZ1- B3-1

WKM型
Model WKM

减速机规格 63
Specification code of gear units 63

2级传动
2 stages transmission

速比i=40
Ratio of reducer i=40

电机接线盒位置 1
Poition of motor terminal box 1

安装方式 B3
Installation position B3

配输出轴 DZ1
With output shaft DZ1

配0.25KW电机,4级
With 0.25KW electric motor

WKM. . . . . .

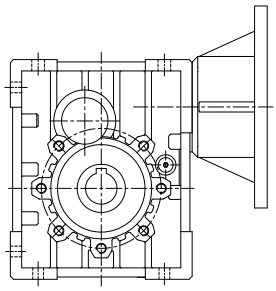

WKMS. . . . . .

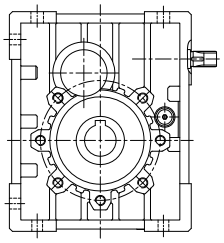

WKM.....FA1

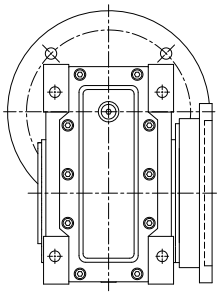

WKM.....FA2

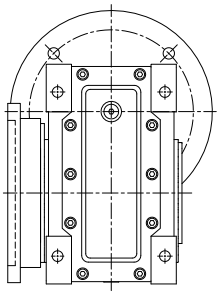

WKM.....TA1

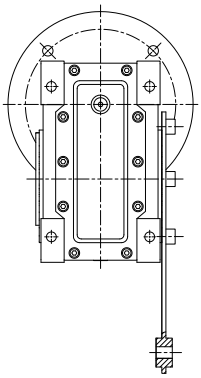

WKM.....TA2

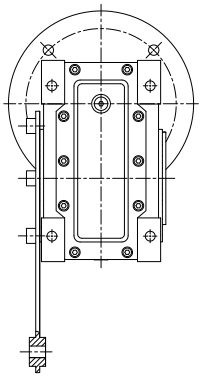

WKM. DZ1

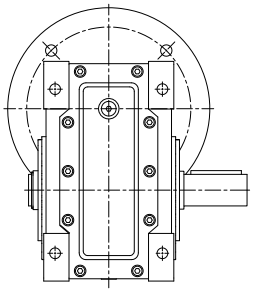

WKM. DZ2

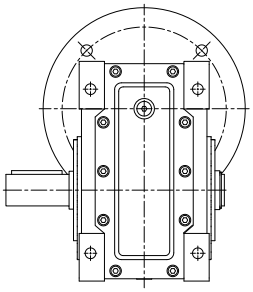

WKM. . . . . SZ

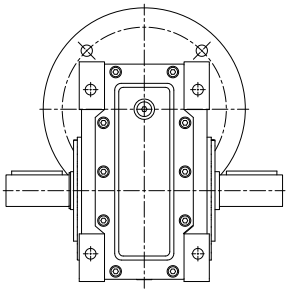

符号 Symbol	含义 Meaning
	通气帽 Breather
	油镜塞 Oil mirror
	放油塞 Oil drain plug

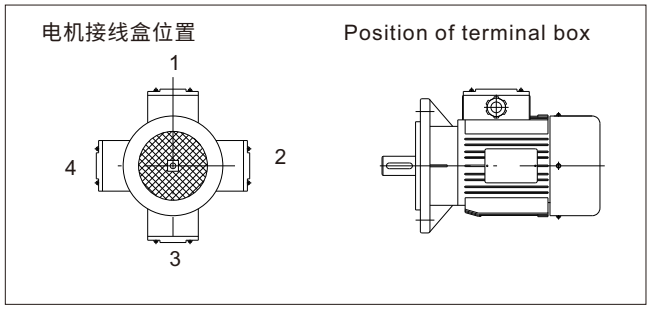

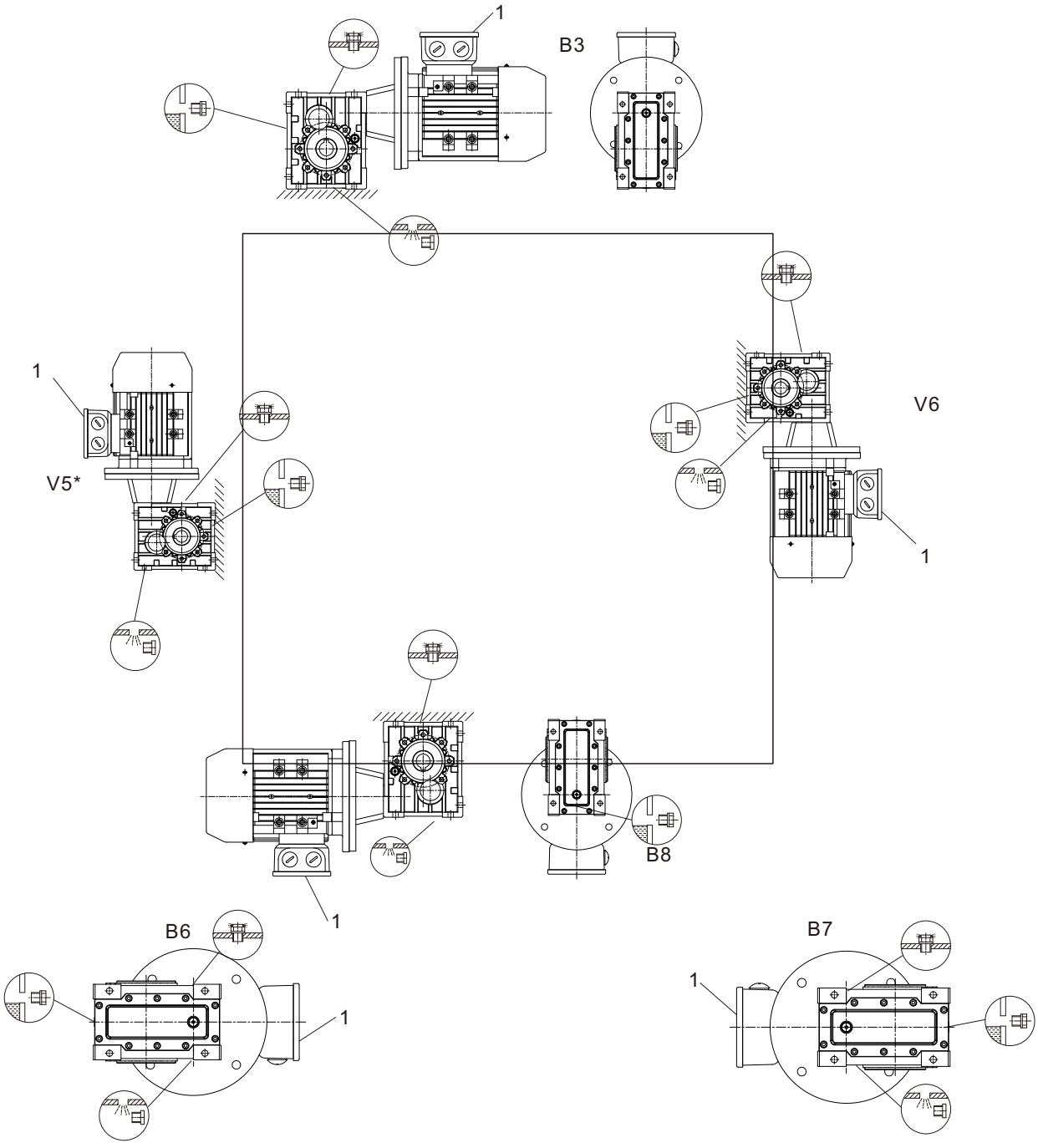

*:表示在此安装方式，不能仅凭油镜塞加注润滑油，油位需高出油镜塞，加注量按表内所示.

*:It means the lubricant can't be added only according to the oil level of mirror, but also higher than it, the fill quantity as shown in the table.

4. 选型相关参数

4.1 功率 P

$$P_1 = \frac{P_2}{\eta} \quad [kW]$$

$$P_{1n} \geqslant P_1 \quad [kW]$$

P_1 输入功率
P_2 输出功率
P_{1n} 电机额定功率
η 传动效率

WKM系列减速器的效率是根据传动级数确定，2级传动效率η为92%，3级传动效率η为90%。

4.2 转速 n

n_1 减速器输入转速
n_2 减速器输出转速

本系列减速机的额定输入转速为1400r/min,建议用户在1400r/min或者更低的转速下使用;允许在较高的输入转速条件下使用，但在这种情况下，额定扭矩M2会有所下降。

4.3 传动比 i

$$i = \frac{n_1}{n_2}$$

传动比通常为小数，在选型表中保留两位小数。

4.4 扭矩 M

$$M_2 = \frac{9550 \cdot P_1 \cdot \eta}{n_2} \quad [Nm]$$

$$M_{2MAX} \geqslant M_2 \cdot f_s \quad [Nm]$$

M_2 输出扭矩
M_{2MAX} 最大允许输出扭矩
P_1 输入功率
η 传动效率
f_S 工况系数

4.5 使用系数

使用减速器时，应考虑一定的使用系数。
f_S为工况系数，它是根据每天的运转时间和启停频率Z,及负载类型确定的。
f_B为使用系数,它是根据减速机承载能力计算出来的。

选型时需满足:

$$f_B \geqslant f_S$$

4. RELEVANT PARAMETER

4.1 Power P

$$P_1 = \frac{P_2}{\eta} \quad [kW]$$

$$P_{1n} \geqslant P_1 \quad [kW]$$

P_1 Input power
P_2 Output power
P_{1n} Rated power of motor
η Transmission efficiency

The efficiency of WKM gear units varies with the number of gear stages, between 92 % (2-stage), 90%(3-stage).

4.2 Rotation speed n

n_1 Input speed of reducer
n_2 Output speed of reducer

If driven by the external equipment,1400r/min or lower rotation speed is suggested to be used in order to optimize the working conditions and prolong the service life. Higher input rotation speed is permitted, but in this case,the rated torque M_2 will be reduced.

4.3 Transmission ratio i

$$i = \frac{n_1}{n_2}$$

Usually transmission ratio is decimal fraction with 2 radix point tagged in selection tables.

4.4 Torque M

$$M_2 = \frac{9550 \cdot P_1 \cdot \eta}{n_2} \quad [Nm]$$

$$M_{2n} \geqslant M_2 \cdot f_s \quad [Nm]$$

M_2 Output torque
M_{2MAX} Max. permissible output torque [Nm]
P_1 Input power
η Transmission efficiency
f_S Service factor

4.5 Service factor

We must take service factor into consideration when we use reducer .

f_S service factor is determined according to the daily operating and the starting frequency Z.

F_B service factor is determined gear unit output torque.

Please meet below requirement when choose product:

$$f_B \geqslant f_S$$

根据惯性加速系数确定三种负载类型，在下图中可以读取实际应用的使用系数，按下图选取的工况系数必须小于或等于从性能参数表中提供的使用系数。

Three load classifications are considered depending on the inertia coefficient. You can read off the service factor applicable to your application in following Figure. The service factor selected using this diagram must be less than or equal to the service factor as given in the performance parameter table.

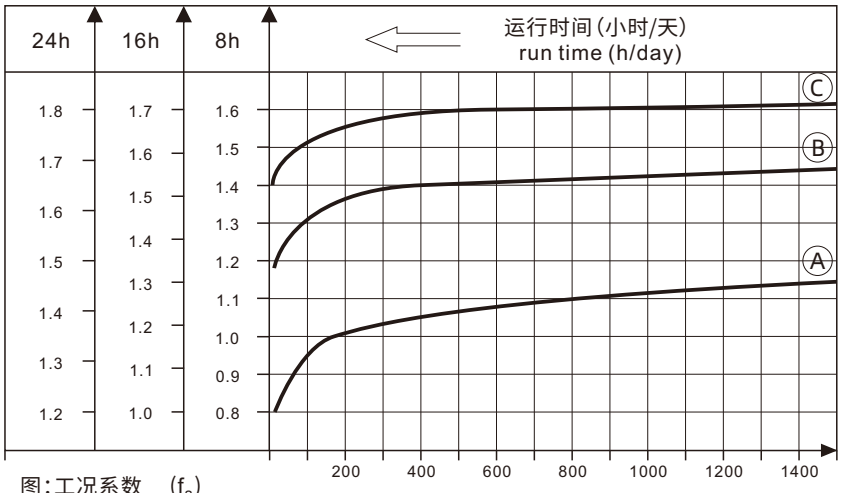

图：工况系数 (f_s)
Fig:Service factor (f_s)

#启动频率 Z：周期包括所有启动、制动的次数以及变速电机高低速变化时的次数。

Starting frequency Z: The cycles include all starting and braking procedures as well as change overs from low to high speed.

4.5.1 负载类型

Ⓐ 均匀冲击负载，允许惯性加速系数 $f_a \leqslant 0.2$

Ⓑ 中等冲击负载，允许惯性加速系数 $f_a \leqslant 3$

Ⓒ 重冲击负载，允许惯性加速系数 $f_a \leqslant 10$

负载类型：

Ⓐ 螺杆输送，风扇，装备线，输送带，小型搅拌器，电梯，清洗机器，过滤器，控制驱动。

Ⓑ 卷扬机，木工机器进料器，货物起重机，平衡器，绞螺纹机器，中型搅拌器，重型输送带，绞盘，滑动阀门，刮料机，包装机械，混凝土搅拌机，行车驱动装置，铣床，齿轮泵。

Ⓒ 大型搅拌器，剪床，压机，离心机，旋转支撑装置，重型绞盘和起重机，磨床，石材打磨机，翻斗机，钻床，冲床，凸轴压机，摺床，机床转盘，翻桶装置，振荡装置，破碎机。

4.5.1 load classifications

Ⓐ Uniform shock load, permitted mass acceleration factor $f_a \leqslant 0.2$

Ⓑ Moderate shock load,permitted mass acceleration factor $f_a \leqslant 3$

Ⓒ Heavy shock load,permitted mass acceleration factor $f_a \leqslant 10$

Load classifications:

Ⓐ Screw feeders, fans, assembly lines, conveyor belts, small mixers, lifts, cleaning machines, fillers, control machines.

Ⓑ Winding devices, woodworking machine feeders, goods lifts, balancers, threading machines, medium mixers, conveyor belts for heavy materials, winches, sliding doors, fertilizer scrapers, packing machines, concrete mixers, crane mechanisms, milling cutters, folding machines, gear pumps.

Ⓒ Mixers for heavy materials, shears, presses, centrifuges, rotating supports, winches and lifts for heavy materials, grinding lathes, stone mills, bucket elevators, drilling machines, hammer mills, cam presses, folding machines, turntables, tumbling barrels, vibrators, shredders.

4.5.2 惯性加速系数

惯性加速系数计算如下:

$$f_a = \frac{J_c}{J_m}$$

f_a 惯性加速系数
J_c 所有外部转动惯量 (kgm^2)
J_m 驱动电机转动惯量 (kgm^2)

如果惯性加速系数 $f_a > 10$, 请与我们技术部联系

为了保持减速器的使用寿命, 从产品样本中的性能参数表所选择的使用系数f_B应等于或略高于实际应用中的工况系数f_s

举例:

惯性加速系数2.5(负载类型 Ⓑ运行时间14小时/天, (按16小时/天查图) 和每小时200次起停, 查图得工况系数f_s=1.48。根据性能参数表所选择的使用系数$f_B \geq 1.48$。

4.5.2 Interial coefficient

The interial coefficient is calculated as follows:

$$f_a = \frac{J_c}{J_m}$$

f_a Coefficient of inertia
J_c All external moments of inertia (kgm^2)
J_m Moment of inertia of the motor (kgm^2)

If coefficient of inertia $f_a > 10$, please call our Technical Service.

To keep the lifetime of reducer, the use factor f_B selected from the catalogue must be equal or slightly higher than actual application service factor f_s.

Example:

Inertial coefficient of 2.5(load classification Ⓑ), 14 hours/day operating time (read off at 16 h/d) and 200 stop/hour result in a service factor f_s = 1.48. According to the parameter sheet, we choose the service factor $f_B \geq 1.48$.

4.6 径向载荷和轴向载荷

在确定影响径向载荷时, 必须考虑安装在轴端上的传动件类型。不同类型的传动件的传动附加系数fz列表如下:

4.6 Radial loads and axial forces

When determining the resulting radial loads, the type of transmission elements, mounted on the shaft end must be considered. Various transmission elements are corresponding with following transmission element factors f_z:

传动件 Transmission element	传动附加系数f_z Additional transmission factor f_z	注释 Comments
齿轮 Gears	1.15	<17齿 17 teeth
链轮 Chain sprockets	1.40	<13齿 13 teeth
	1.25	<20齿 20 teeth
V带轮 Narrow V-belt pulleys	1.75	有预紧力作用 Influence of the tensile force
平带轮 Flat belt pulleys	2.50	有预紧力作用 Influence of the tensile force
齿带轮 Toothed belt pulleys	2.50	有预紧力作用 Influence of the tensile force

作用在电机和齿轮轴上的径向载荷按如下公式计算:

$$F_r = \frac{M \cdot 2000 \cdot f_z}{d_o} \quad [N]$$

F_r 作用在轴上的载荷[N]
M 作用在轴上的扭矩[Nm]
d_o 安装在轴上传动件的平均直径[mm]
f_z 传动附加系数

The radial loads exerted on the motor or gear shaft is then calculated as follows:

$$F_r = \frac{M \cdot 2000 \cdot f_z}{d_o} \quad [N]$$

F_r Resulting radial load [N]
M Torque on the shaft [Nm]
d_o Mean diameter of transmission element mounted on shaft [mm]
f_z Additional transmission factor

许用径向载荷是根据轴承额定使用寿命L_{10h}来估算的(根据ISO281)。作用点位于输出轴伸的中部(L/2)

当作用点偏离出轴中点时,许用径向载荷须按以下公式来计算,取在X点的许可数值F_{XL}(根据轴承的使用寿命)。

根据轴承的使用寿命公式:

$$F_{XL} = F_{r2} \cdot \frac{a}{b+x} \quad [N]$$

F_{r2} = 性能参数表中的许用径向载荷(x=L/2)[N]

x = 从轴肩到受力点的距离[mm]

a,b, = 减速器径向转化常量[mm]

The basis for determining the permitted radial loads is based on the rated service life L_{10h} of the bearings (according to ISO281).Function point is placed in the middle of exposed part of output shaft.

The permitted radial loads given in the selection tables must be calculated using the following formula in the event of force application not in the center of the shaft end. The smaller of the two calues F_{XL}(according to bearing service life)

F_{XL} according to bearing service life:

$$F_{XL} = F_{r2} \cdot \frac{a}{b+x} \quad [N]$$

F_{r2} = Permitted radial load(x=L/2) according to he selection tables in [N]

x = Distance from the shaft shoulder to the force application point in [mm]

a,b, = Constant conversion of radial load [mm]

输出轴径向载荷 F_{r2}/ radial loads of output shaft F_{r2}

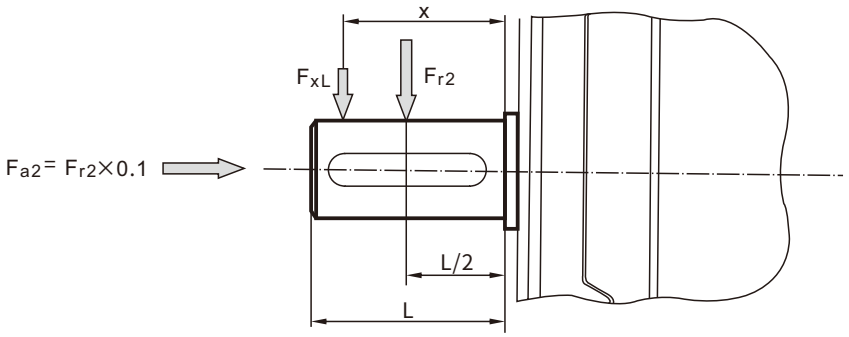

F_{a2} = 输出轴向载荷
Output axial loads

WKM 减速器径向转化常量 / Constants conversion of radial load of WKM reduer:

	WKM50B	WKM50C	WKM63B	WKM63C	WKM75B	WKM75C	WKM90B	WKM90C
a	105.5	105.5	120	120	133	133	163	163
b	80.5	80.5	95	95	103	103	123	123

注:本减速机的输入轴不宜采用齿轮,皮带轮,等有较大径向力的传动形式输入,如有特殊需要,请与本公司技术部联系。

Remark:This reducer is not suitable to connect with gear,pulley and so on,which have big radial force as input.If it has special requests,please contact our technical department.

4.7 选型表注释

	表示电机与减速器的组合是可行的
	表示电机与减速器的组合是不可行的
*	表示速比可除尽
P_{1n}	电机额定功率 [kW];
P_{1MAX}	电机最大功率 [kW];
n_2	输出转速 [r/min];
M_2	输出扭矩 [Nm];
$M_{2\,max}$	最大允许输出扭矩 [Nm];
F_{r2}	输出轴径向载荷 [N];
i	减速器公称传动比;
i_a	减速器实际传动比;
f_B	使用系数;
	减速器型号;
	电机型号;

4.7 Selection tables comments

	Combination with the motor in the header row is possible
	Combination with the motor in the header row is not possible
*	It means ratio is divisible
P_{1n}	Rated power of motor [kW];
P_{1MAX}	Max. motor power [kW];
n_2	Output speed [r/min];
M_2	Output torque [Nm];
$M_{2\,max}$	Max. allowed output torque [Nm];
F_{r2}	Radial load of output shaft [N];
i	Nominal ratio of reducer;
i_a	Actual ratio of reducer;
f_B	Service factor;
	Gear unit type;
	Motor type;

5 选型举例

5.1 减速电机

例：被驱动设备所需功率0.66kW，工作16小时/天，中等冲击，启动频率50次/小时，输出转速n_2=28r/min，减速机要求B3安装，则：

1. 查使用系数图表即可选工况系数f_s=1.4

2. 传动比：
ratio: $$i = \frac{n_1}{n_2} = \frac{1400}{28} = 50$$

3. 电机功率
power of motor: $$P_{1n} \geqslant P_1 = \frac{P_2}{\eta} = \frac{0.66}{0.92} = 0.72 \ [KW]$$

$$f_B \geqslant f_s$$

查WKM..系列性能参数表可确定减速电机型号为：

WKM75B - 48.18 - Y0.75-4 - B3

$$f_B = 1.5 \geqslant f_s = 1.4$$

满足 $f_B \geqslant f_s$ 的要求

5 SELECTION EXAMPLE

5.1 Gear motor

Example: Required power 0.66kW on driven machine, work for 16 h/day, moderate shock load, start up frequency 50(1/h), n_2=28r/min, B3 mounted, So:

Check the service factor table,choose f_s=1.4

Choose type:

WKM75B - 48.18 - Y0.75-4 - B3

Must meet requirement when $f_B \geqslant f_s$

5.2 减速器

例：被驱动设备所需扭矩为260Nm，工作16小时/天，均匀冲击负载，启动频率200次/小时，减速机要求FA1法兰安装，减速器要求输入转速1400r/min，输出转速n_2=12r/min，请选合适减速机。

1. 查使用系数图表即可选工况系数fs=1.47

2. 传动比：
ratio: $$i = \frac{n_1}{n_2} = \frac{1400}{12} = 125$$ （只能选三级传动）

3. 最大扭矩
MAX torque $$M_{2MAX} \geqslant M_2 \cdot f_s = 260 \times 1.47 = 382 \ [Nm]$$

4. 电机功率
power of motor: $$P_{1n} \geqslant P_1 = \frac{M_2 \cdot n_1}{9550 \cdot \eta \cdot i} = \frac{260 \times 1400}{9550 \times 0.90 \times 125} = 0.34 \ [kW]$$

$$f_B \geqslant f_s$$

查WKM系列性能参数表可确定减速型号为：

WKMS90C-125.95-FA1 轴输入减速器

$$f_B = 1.7 \geqslant f_s = 1.47$$

满足 $f_B \geqslant f_s$ 的要求

建议采用0.37KW，1400r/min电机驱动，电机与减速器之间采用联轴器连接。

5.2 Gear units

Example: Required torque is 260Nm on driven machine, work 16 h/day, uniform load, start up frequency 200(1/h), FA1 mounted, n_1=1400 r/min, n_2=12 r/min, please choose suitable reducer:

Check the service factor table , choose f_s=1.47

Choose type:

WKMS90C-125.95-FA1 Shaft input reducer

Must meet requirement when $f_B \geqslant f_s$

Advice to take 0.37KW,1400r/min motor as drive,we use coupling to connect reducer and motor.

6. 减速器选型表 / GEAR UNIT SELECTION TABLES

6.1 减速器组合表 / Possible geometrical combinations

WKM 50..　n_1=1400 r/min　130Nm

减速器型号 Gear units	i 公称 Nominal	i 实际 Actual	n_2 [r/min]	M_{2MAX} [Nm]	F_{r2} [N]	63B5	71B5 71B14	80B5 80B14	90B5 90B14
3 级 / 3 Stage									
WKM50C	300	291.79	4.8	130	4100				
WKM50C	250	244.29	5.7	130	4100				
WKM50C	200	200.44	7.0	130	4100				
WKM50C	150	146.67	9.5	130	4000				
WKM50C	125	120.34	11.6	100	3770				
WKM50C	100	101.04	13.9	80	3560				
WKM50C	75	74.62	18.8	130	3220				
WKM50C	60	62.36	22	100	3030				
WKM50C	50	52.36	27	110	2860				
2 级 / 2 Stage									
WKM50B	60	58.36	24	130	2960				
WKM50B	50	48.86	29	130	2790				
WKM50B	40	40.09	35	130	2610				
WKM50B	30	29.33	48	130	2350				
WKM50B	25	24.07	59	130	2200				
WKM50B	20	20.21	70	100	2080				
WKM50B	15	14.92	94	80	1880				
WKM50B	12.5	12.47	113	130	1770				
WKM50B	10	10.47	134	100	1670				
WKM50B	7.5	7.73	182	80	1510				

WKM 63..　n_1=1400 r/min　200Nm

减速器型号 Gear units	i 公称 Nominal	i 实际 Actual	n_2 [r/min]	M_{2MAX} [Nm]	F_{r2} [N]	63B5	71B5 71B14	80B5 80B14	90B5 90B14
3 级 / 3 Stage									
WKM63C	300	304.46	4.7	200	4800				
WKM63C	250	242.26	5.8	200	4800				
WKM63C	200	196.43	7.2	180	4800				
WKM63C	150	150.74	9.3	200	4650				
WKM63C	125	122.22	12	180	4330				
WKM63C	100	101.27	14	150	4070				
WKM63C	75	73.33	20	110	3650				
WKM63C	60	63.33	23	180	3480				
WKM63C	50	52.48	27	150	3270				
2 级 / 2 Stage									
WKM63B	60	60.89	24	200	3430				
WKM63B	50	48.45	29	200	3190				
WKM63B	40	39.29	36	180	2970				
WKM63B	30	30.15	47	200	2720				
WKM63B	25	24.44	58	180	2530				
WKM63B	20	20.25	70	150	2380				
WKM63B	15	14.67	96	110	2130				
WKM63B	12.5	12.67	111	180	2030				
WKM63B	10	10.50	134	150	1910				
WKM63B	7.5	7.60	185	110	1710				

WKM 75.. n_1=1400 r/min 350Nm

减速器型号 Gear units	i 公称 Nominal	i 实际 Actual	n_2 [r/min]	M_{2MAX} [Nm]	F_{r2} [N]	63B5	71B5	80B5 80B14	90B5 90B14	100B5 100B14	112B5 112B14
3 级 / Stage											
WKM75C	300	295.18	4.8	350	6500						
WKM75C	250	240.89	5.9	350	6500						
WKM75C	200	200.66	7.0	300	6500						
WKM75C	150	149.29	9.3	350	6500						
WKM75C	125	121.02	12	300	5980						
WKM75C	100	100.81	15	240	5520						
WKM75C	75	79.41	19	200	5040						
WKM75C	60	62.43	23	300	4730						
WKM75C	50	49.18	29	240	4370						
2 级 / Stage											
WKM75B	60	59.04	24	350	4660						
WKM75B	50	48.18	30	350	4340						
WKM75B	40	40.13	35	300	4080						
WKM75B	30	29.66	47	350	3720						
WKM75B	25	24.20	56	300	3500						
WKM75B	20	20.16	71	240	3230						
WKM75B	15	15.88	93	200	2950						
WKM75B	12.5	12.49	113	300	2770						
WKM75B	10	9.84	143	240	2550						
WKM75B	7.5	7.48	188	200	2330						

WKM 90.. n_1=1400 r/min 500Nm

减速器型号 Gear units	i 公称 Nominal	i 实际 Actual	n_2 [r/min]	M_{2MAX} [Nm]	F_{r2} [N]	63B5	71B5	80B5 80B14	90B5 90B14	100B5 100B14	112B5 112B14
3 级 / Stage											
WKM90C	300	295.18	4.8	500	8300						
WKM90C	250	240.89	5.9	500	8300						
WKM90C	200	200.66	7.0	480	8300						
WKM90C	150	151.20	9.3	500	8050						
WKM90C	125	125.95	12	480	7580						
WKM90C	100	99.22	15	380	7000						
WKM90C	75	75.45	19	300	6390						
WKM90C	60	62.43	23	480	6000						
WKM90C	50	49.18	29	380	5540						
2 级 / Stage											
WKM90B	60	59.04	24	500	5890						
WKM90B	50	48.18	30	500	5500						
WKM90B	40	40.13	35	480	5170						
WKM90B	30	30.24	47	500	4710						
WKM90B	25	25.19	56	480	4430						
WKM90B	20	19.84	71	380	4090						
WKM90B	15	15.09	93	300	3730						
WKM90B	12.5	12.49	113	480	3510						
WKM90B	10	9.84	143	380	3240						
WKM90B	7.5	7.48	188	300	2950						

WKM 110.. n_1=1400 r/min

750Nm

减速器型号 Gear units	i 公称 Nominal	i 实际 Actual	n_2 [r/min]	M_{2MAX} [Nm]	F_{r2} [N]	MV71	MV80	MV90	MV100	MV112	MV132
3级 / Stage											
WKM110B	300	296.1	4.7	750	10000						
WKM110B	250	244.29	5.7	750	10000						
WKM110B	200	206.26	6.8	750	9920						
WKM110B	150	153.33	9.1	750	8980						
WKM110B	125	129.48	10.8	750	8490						
WKM110B	100	103.64	13.5	650	7880						
WKM110B	75	75.55	18.5	520	7080						
WKM110B	60	64.18	22	750	6720						
WKM110B	50	51.37	27	650	6240						
2级 / Stage											
WKM110C	60	59.22	24	750	6540						
WKM110C	50	48.86	29	750	6130						
WKM110C	40	41.26	34	750	5800						
WKM110C	30	30.67	46	750	5250						
WKM110C	25	25.5	54	750	4960						
WKM110C	20	20.73	68	650	4610						
WKM110C	15	15.11	93	520	4150						
WKM110C	12.5	12.84	109	750	3900						
WKM110C	10	10.27	136	650	3650						
WKM110C	7.5	7.49	187	520	3280						

6.2 WKM.. 性能参数 / Performance parameter

P_{1n} [kW]	n_2 [r/min]	M_2 [Nm]	i 公称 Nominal	i 实际 Actual	F_{r_2} [N]	f_B		
0.12	5.7	180	250	244.29	4100	0.7	WKM50C	63B5-4
	7.0	148	200	200.44	4100	0.9		
	9.5	108	150	146.67	4000	1.2		
	11.6	89	125	120.34	3770	1.1		
	13.9	74	100	101.04	3560	1.0		
	18.8	55	75	74.62	3220	2.3		
	22.5	46	60	62.36	3030	2.1		
	26.7	39	50	52.36	2860	2.8		
	24.0	44	60	58.36	2960	3.0	WKM50B	63B5-4
	28.7	37	50	48.86	2790	3.5		
	35	30	40	40.09	2610	4.2		
	48	22	30	29.33	2350	5.8		
	58	18	25	24.07	2200	7.0		
	69	15.2	20	20.21	2080	6.6		
	94	11.2	15	14.92	1880	7.1		
	112	9.4	12.5	12.47	1770	13.5		
	134	7.9	10	10.47	1670	12.7		
	181	5.8	7.5	7.73	1510	13.7		
	5.7	179	250	242.26	4800	1.1	WKM63C	63B5-4
	7.1	145	200	196.43	4800	1.2		
	9.2	112	150	150.74	4650	1.8		
	11.5	90	125	122.22	4330	2.0		
	13.8	75	100	101.27	4070	2.0		
	19.1	54	75	73.33	3650	2.0		
	22.1	47	60	63.33	3480	3.9		
	26.7	39	50	52.48	3270	3.9		
	23.1	46	60	60.89	3430	4.4	WKM63B	63B5-4
	28.7	37	50	48.45	3190	5.5		
	36	30	40	39.29	2970	6.1		
	46	23	30	30.15	2720	8.8		
	4.7	219	300	295.18	6500	1.6	WKM75C	63B5-4
	5.8	177	250	240.89	6500	2.0		
	7.0	148	200	200.66	6500	2.0		
	9.3	111	150	149.28	6500	3.1		
	11.1	93	125	121.42	5980	3.2		
	4.7	217	300	295.18	8300	2.3	WKM90C	63B5-4
	5.8	177	250	240.89	8300	2.8		
	7.0	148	200	200.66	8300	3.2		
	9	111	150	151.20	8050	4.5		
0.18	9.6	161	300	291.79	4000	0.8	WKM50C	63B5-2
	11.5	135	250	244.29	3790	0.9		
	14.0	111	200	200.44	3550	1.2		
	19.1	81	150	146.67	3200	1.6		
	23.3	66	125	120.34	2990	2.0		
	27.7	56	100	101.04	2820	1.8		
	38	41	75	74.62	2550	1.9		
	45	34	60	62.36	2400	3.8		
	53	29	50	52.36	2270	3.5		
	48	33	60	58.36	2350	3.8	WKM50B	63B5-2
	57	27	50	48.86	2220	4.6		
	70	22	40	40.09	2070	5.6		
	95	16	30	29.33	1870	7.7		
	116	13	25	24.07	1750	9.4		

P_{1n} [kW]	n_2 [r/min]	M_2 [Nm]	i 公称 Nominal	i 实际 Actual	F_{r2} [N]	f_B		
0.18	11.6	133	125	120.34	3770	1.0	WKM50C	63B5-4
	13.9	112	100	101.04	3560	0.9		
	18.8	82	75	74.62	3220	1.0		
	22.5	69	60	62.36	3030	1.9		
	26.7	58	50	52.36	2860	1.7		
	24.0	66	60	58.36	2960	2.0	WKM50B	63B5-4
	28.7	55	50	48.86	2790	2.4		
	35	45	40	40.09	2610	2.9		
	48	33	30	29.33	2350	3.9		
	58	27	25	24.07	2200	4.7		
	69	23	20	20.21	2080	4.4		
	94	16.9	15	14.92	1880	4.7		
	112	14.1	12.5	12.47	1770	9.0		
	134	11.8	10	10.47	1670	8.3		
	181	8.7	7.5	7.73	1510	9.0		
	12.1	128	75	74.62	3730	1.0	WKM50C	71B5/B14-6
	14.4	107	60	62.36	3510	0.9		
	17.2	90	50	52.36	3310	1.2		
	15.4	103	60	58.36	3430	1.3	WKM50B	71B5/B14-6
	18.4	86	50	48.86	3240	1.5		
	22.4	70	40	40.09	3030	1.8		
	31	52	30	29.33	2730	2.5		
	37	42	25	24.07	2550	3.1		
	45	36	20	20.21	2410	2.8		
	60	26	15	14.92	2180	3.1		
	72	22	12.5	12.47	2050	5.9		
	9.3	167	300	304.46	4650	1.2	WKM63C	63B5-2
	11.5	135	250	242.26	4330	1.5		
	14.3	109	200	196.43	4030	1.7		
	18.5	84	150	150.74	3690	2.4		
	22.9	68	125	122.22	3440	2.7		
	27.6	56	100	101.27	3230	2.7		
	38	41	75	73.33	2900	2.7		
	44	35	60	63.33	2760	5.1		
	53	29	50	52.48	2590	5.2		
	7.1	217	200	196.43	4800	0.8	WKM63C	63B5-4
	9.2	167	150	150.74	4650	1.2		
	11.5	135	125	122.22	4330	1.3		
	13.8	112	100	101.27	4070	1.3		
	19.1	81	75	73.33	3650	1.4		
	22.1	70	60	63.33	3480	2.6		
	26.7	58	50	52.48	3270	2.6		
	23.1	68	60	60.89	3430	2.9	WKM63B	63B5-4
	28.7	55	50	48.45	3190	3.6		
	36	44	40	39.29	2970	4.1		
	7.4	210	125	122.22	4800	0.9	WKM63C	71B5/B14-6
	8.9	174	100	101.27	4720	0.9		
	12.3	126	75	73.33	4230	0.9		
	14.2	109	60	63.33	4030	1.7		
	17.1	90	50	52.48	3790	1.7		
	14.9	106	60	60.89	3970	1.9	WKM63B	71B5/B14-6
	18.5	86	50	48.45	3690	2.3		
	22.9	69	40	39.29	3440	2.6		
	29.7	53	30	30.15	3150	3.8		
	9.4	164	300	295.18	6320	2.1	WKM75C	63B5-2
	11.6	133	250	240.89	5890	2.6		
	14.0	111	200	200.66	5540	2.7		
	18.5	84	150	149.29	5040	4.2		

P_{1n} [kW]	n_2 [r/min]	M_2 [Nm]	i 公称 Nominal	i 实际 Actual	F_{r2} [N]	f_B		
0.18	4.7	328	300	295.18	6500	1.1	WKM75C	63B5-4
	5.8	266	250	240.89	6500	1.3		
	7.0	222	200	200.66	6500	1.4		
	9.3	167	150	149.29	6500	2.1		
	11.1	139	125	121.02	5980	2.2		
	14.1	110	100	100.81	5520	2.2		
	18.6	83	75	79.46	5040	2.4		
	4.5	345	200	200.66	6500	0.87	WKM75C	71B5-6
	6.0	260	150	149.29	6500	1.3		
	7.1	217	125	121.02	6500	1.4		
	9.1	171	100	100.81	6400	1.4		
	11.9	130	75	79.46	5840	1.5		
	14.4	107	60	62.43	5480	2.8		
	18.3	85	50	49.18	5060	2.8		
	15.1	104	60	59.04	5390	3.4	WKM75B	71B5-6
	18.7	85	50	48.18	5030	4.1		
	9.5	163	300	295.18	7990	3.1	WKM90C	63B5-2
	11.6	133	250	240.89	7470	3.8		
	4.7	326	300	295.18	8300	1.5	WKM90C	63B5-4
	5.8	266	250	240.89	8300	1.9		
	7.0	222	200	200.66	8300	2.2		
	9.3	167	150	151.20	8050	3.0		
	11.1	139	125	125.95	7580	3.4		
	3.7	414	250	240.89	8300	1.2	WKM90C	71B5-6
	4.5	345	200	200.66	8300	1.4		
	6.0	260	150	151.20	8300	1.9		
	7.1	217	125	125.95	8300	2.2		
	9.1	171	100	99.22	8110	2.2		
	11.9	130	75	75.45	7400	2.3		
	14.4	107	60	62.43	6950	4.5		
0.25	19.1	113	150	146.67	3200	1.2	WKM50C	63B5-2
	23.3	92	125	120.34	2990	1.4		
	27.7	78	100	101.04	2820	1.3		
	38	57	75	74.62	2550	1.4		
	45	48	60	62.36	2400	2.7		
	53	40	50	52.36	2270	2.4		
	48	46	60	58.36	2350	2.7	WKM50B	63B5-2
	57	38	50	48.86	2220	3.3		
	70	31	40	40.09	2070	4.0		
	18.8	114	75	74.62	3220	0.94	WKM50C	71B5/B14-4
	22.5	96	60	62.36	3030	1.4		
	26.7	80	50	52.36	2860	1.2		
	24.0	92	60	58.36	2960	1.4	WKM50B	71B5/B14-4
	28.7	77	50	48.86	2790	1.7		
	35	63	40	40.09	2610	2.1		
	48	46	30	29.33	2350	2.8		
	58	38	25	24.07	2200	3.4		
	69	32	20	20.21	2080	3.2		
	94	23	15	14.92	1880	3.4		
	18.4	119	50	48.86	3240	1.1	WKM50B	71B5/B14-6
	22.4	98	40	40.09	3030	1.3		
	31	72	30	29.33	2730	1.8		
	37	59	25	24.07	2550	2.2		
	45	49	20	20.21	2410	2.0		
	60	36	15	14.92	2180	2.2		
	72	30	12.5	12.47	2050	4.3		
	86	26	10	10.47	1930	3.9		
	116	19	7.5	7.73	1750	4.2		

P_{1n} [kW]	n_2 [r/min]	M_2 [Nm]	i 公称 Nominal	i 实际 Actual	F_{r2} [N]	f_B		
0.25	11.5	187	250	242.26	4330	1.1	WKM63C	63B5-2
	14.3	151	200	196.43	4030	1.2		
	18.5	116	150	150.24	3690	1.7		
	22.9	94	125	122.22	3440	1.9		
	27.6	78	100	101.27	3230	1.9		
	38	56	75	73.33	2900	2.0		
	44	49	60	63.33	2760	3.7		
	53	40	50	52.48	2590	3.7		
	11.5	188	125	122.22	4330	1.0	WKM63C	71B5/B14-4
	13.8	155	100	101.27	4070	1.0		
	19.1	113	75	73.33	3650	1.0		
	22.1	97	60	63.33	3480	1.9		
	26.7	81	50	52.48	3270	1.9		
	23.1	95	60	60.89	3430	2.1	WKM63B	71B5/B14-4
	28.7	76	50	48.45	3190	2.6		
	36	62	40	39.29	2970	2.9		
	46	48	30	30.15	2720	4.2		
	14.2	151	60	63.33	4030	1.2	WKM63C	71B5/B14-6
	17.1	125	50	52.48	3790	1.2		
	14.9	148	60	60.89	3970	1.4	WKM63B	71B5/B14-6
	18.5	119	50	48.45	3690	1.7		
	22.9	96	40	39.29	3440	1.9		
	29.7	74	30	30.15	3150	2.7		
	37	60	25	24.44	2930	3.0		
	44	49	20	20.25	2760	3.0		
	9.4	228	300	295.18	6320	1.5	WKM75C	63B5-2
	11.6	185	250	240.89	5890	1.9		
	14.0	154	200	200.66	5540	1.9		
	18.5	116	150	149.29	5040	3.0		
	22.2	97	125	121.02	4750	3.1		
	5.8	370	250	240.89	6500	0.95	WKM75C	71B5-4
	7.0	308	200	200.66	6500	0.97		
	9.3	232	150	149.29	6500	1.5		
	11.1	193	125	121.02	5980	1.6		
	14.1	152	100	100.81	5520	1.6		
	18.6	116	75	79.46	5040	1.7		
	22.4	96	60	62.43	4730	3.1		
	6.0	361	150	149.29	6500	0.97	WKM75C	71B5-6
	7.1	301	125	121.02	6500	1.0		
	9.1	237	100	100.81	6400	1.0		
	11.9	180	75	79.46	5840	1.1		
	14.4	149	60	62.43	5480	2.0		
	18.3	117	50	49.18	5060	2.0		
	15.1	145	60	59.04	5390	2.4	WKM75B	71B5-6
	18.7	118	50	48.18	5030	3.0		
	22.4	98	40	40.13	4730	3.1		
	9.5	227	300	295.18	7990	2.2	WKM90C	63B5-2
	11.6	185	250	240.89	7470	2.7		
	14.0	154	200	200.66	7030	3.1		
	18.5	116	150	151.20	6390	4.3		
	4.7	453	300	295.18	8300	1.1	WKM90C	71B5-4
	5.8	370	250	240.89	8300	1.4		
	7.0	308	200	200.66	8300	1.6		
	9.3	232	150	151.20	8050	2.2		
	11.1	193	125	125.95	7580	2.5		
	14.1	152	100	99.22	7000	2.5		
	18.6	116	75	75.45	6390	2.6		

P_{1n} [kW]	n_2 [r/min]	M_2 [Nm]	i 公称 Nominal	i 实际 Actual	F_{r2} [N]	f_B		
0.25	4.5	479	200	200.66	8300	1.0	WKM90C	71B5-6
	6.0	361	150	151.20	8300	1.4		
	7.1	301	125	125.95	8300	1.6		
	9.1	237	100	99.22	8110	1.6		
	11.9	180	75	75.45	7400	1.7		
	14.4	149	60	62.43	6950	3.2		
	18.3	117	50	49.18	6420	3.2		
	15.2	144	60	59.04	6820	3.5	WKM90B	71B5-6
	18.7	118	50	48.18	6370	4.3		
0.37	23.3	137	125	120.34	2990	0.95	WKM50C	71B5/B14-2
	27.7	115	100	101.04	2820	0.87		
	38	85	75	74.62	2550	0.94		
	45	71	60	62.36	2400	1.8		
	53	59	50	52.36	2270	1.7		
	48	67	60	58.36	2350	1.9	WKM50B	71B5/B14-2
	57	57	50	48.86	2220	2.2		
	70	47	40	40.09	2070	2.7		
	95	34	30	29.33	1870	3.7		
	28.7	113	50	48.86	2790	1.1	WKM50B	71B5/B14-4
	35	93	40	40.09	2610	1.4		
	48	68	30	29.33	2350	1.9		
	58	56	25	24.07	2200	2.3		
	69	47	20	20.21	2080	2.1		
	94	35	15	14.92	1880	2.3		
	112	29	12.5	12.47	1770	4.5		
	134	24	10	10.47	1670	4.1		
	181	18	7.5	7.73	1510	4.5		
	31	106	30	29.33	2730	1.2	WKM50B	80B5/B14-6
	37	87	25	24.07	2550	1.5		
	45	73	20	20.21	2410	1.4		
	60	54	15	14.92	2180	1.5		
	72	45	12.5	12.47	2050	2.9		
	86	38	10	10.47	1930	2.6		
	116	28	7.5	7.73	1750	2.9		
	14.3	223	200	196.43	4030	0.78	WKM63C	71B5/B14-2
	18.5	172	150	150.74	3690	1.2		
	22.9	139	125	122.22	3440	1.3		
	27.6	115	100	101.27	3230	1.3		
	38	83	75	73.33	2900	1.3		
	44	72	60	63.33	2760	2.5		
	53	60	50	52.48	2590	2.5		
	46	70.5	60	60.89	2720	2.7	WKM63B	71B5/B14-2
	57	57	50	48.45	2530	3.5		
	71	46	40	39.29	2350	3.8		
	22.1	144	60	63.33	3480	1.3	WKM63C	71B5/B14-4
	26.7	119	50	52.48	3270	1.3		
	23.1	140	60	60.89	3430	1.4	WKM63B	71B5/B14-4
	28.7	113	50	48.45	3190	1.8		
	36	91	40	39.29	2970	2.0		
	46	70	30	30.15	2720	2.8		
	57	57	25	24.44	2530	3.2		
	69	47	20	20.25	2380	3.2		
	18.5	176	50	48.45	3690	1.1	WKM63B	80B5/B14-6
	22.9	142	40	39.29	3440	1.3		
	29.7	109	30	30.15	3150	1.8		

P_{1n} [kW]	n_2 [r/min]	M_2 [Nm]	i 公称 Nominal	i 实际 Actual	F_{r2} [N]	f_B		
0.37	37	88	25	24.44	2930	2.0	WKM63B	80B5/B14-6
	44	73	20	20.25	2760	2.1		
	61	53	15	14.67	2470	2.1		
	71	46	12.5	12.67	2360	3.9		
	86	38	10	10.50	2210	4.0		
	118	27	7.5	7.60	1990	4.0		
	9.4	338	300	295.18	6320	1.0	WKM75C	71B5-2
	11.6	274	250	240.89	5890	1.3		
	14.0	228	200	200.66	5540	1.3		
	18.5	172	150	149.29	5040	2.0		
	22.2	143	125	121.02	4750	2.1		
	28.2	113	100	100.81	4380	2.1		
	37	86	75	79.41	4000	2.3		
	9.3	343	150	149.29	6500	1.0	WKM75C	71B5-4
	11.1	286	125	121.02	5980	1.0		
	14.1	225	100	100.81	5520	1.1		
	18.6	171	75	79.41	5040	1.2		
	22.4	142	60	62.43	4730	2.1		
	28.5	112	50	49.18	4370	2.1		
	23.6	138	60	59.04	4660	2.5	WKM75B	71B5-4
	29.1	112	50	48.18	4340	3.1		
	35	93	40	40.13	4080	3.2		
	14.4	221	60	62.43	5480	1.4	WKM75C	80B5/B14-6
	18.3	174	50	49.18	5060	1.4		
	15.1	215	60	59.04	5390	1.6	WKM75B	80B5/B14-6
	18.7	174	50	48.18	5030	2.0		
	22.4	145	40	40.13	4730	2.1		
	29.8	109	30	29.66	4310	3.2		
	36	91	25	24.20	4050	3.3		
	9.5	335	300	295.18	7990	1.5	WKM90C	71B5-2
	11.6	274	250	240.89	7470	1.8		
	14.0	228	200	200.66	7030	2.1		
	18.5	172	150	151.20	6390	2.8		
	22.2	143	125	125.95	6010	3.4		
	5.8	547	250	240.89	8300	0.9	WKM90C	71B5-4
	7.0	456	200	200.66	8300	1.1		
	9.3	343	150	151.20	8050	1.5		
	11.1	286	125	125.95	7580	1.7		
	14.1	225	100	99.22	7000	1.7		
	18.6	171	75	75.45	6390	1.8		
	22.4	142	60	62.43	6000	3.4		
	28.5	112	50	49.18	5540	3.4		
	23.7	137	60	59.04	5890	3.6	WKM90B	71B5-4
	29.1	112	50	48.18	5500	4.5		
	6.0	534	150	151.20	8300	0.94	WKM90C	80B5/B14-6
	7.1	445	125	125.95	8300	1.1		
	9.1	351	100	99.22	8110	1.1		
	11.9	267	75	75.45	7400	1.1		
	14.4	221	60	62.43	6950	2.2		
	18.3	174	50	49.18	6420	2.2		
	15.2	213	60	59.04	6820	2.3	WKM90B	80B5/B14-6
	18.7	174	50	48.18	6370	2.9		
	22.4	145	40	40.13	6000	3.3		
0.55	38	126	75	74.62	2550	0.77	WKM50C	71B5/B14-2
	45	105	60	62.36	2400	1.2		
	53	88	50	52.36	2270	1.1		

P_{1n} [kW]	n_2 [r/min]	M_2 [Nm]	i 公称 Nominal	i 实际 Actual	F_{r2} [N]	f_B		
0.55	48	101	60	58.36	2350	1.26	WKM50B	71B5/B14-2
	57	84	50	48.86	2220	1.5		
	70	69	40	40.09	2070	1.8		
	95	51	30	29.33	1870	2.5		
	116	41	25	24.07	1750	3.1		
	139	35	20	20.21	1650	2.7		
	35	138	40	40.09	2610	0.9	WKM50B	80B5/B14-4
	48	101	30	29.33	2350	1.3		
	58	83	25	24.07	2200	1.6		
	69	70	20	20.21	2080	1.4		
	94	51	15	14.92	1880	1.6		
	112	43	12.5	12.47	1770	3.0		
	134	36	10	10.47	1670	2.8		
	181	27	7.5	7.73	1510	3.0		
	37	129	25	24.07	2550	1.0	WKM50B	80B5/B14-6
	45	109	20	20.21	2410	0.92		
	60	80	15	14.92	2180	1.0		
	72	67	12.5	12.47	2050	1.9		
	86	56	10	10.47	1930	1.8		
	116	42	7.5	7.73	1750	1.9		
	22.9	206	125	122.22	3440	0.9	WKM63C	71B5/B14-2
	27.6	171	100	101.27	3230	0.9		
	38	124	75	73.33	2900	0.9		
	44	107	60	63.33	2760	1.7		
	53	89	50	52.48	2590	1.7		
	46	105	60	60.89	2720	1.86	WKM63B	71B5/B14-2
	57	84	50	48.45	2530	2.3		
	71	67.5	40	39.29	2350	2.6		
	92	52	30	30.15	2160	3.7		
	28.7	168	50	48.45	3190	1.2	WKM63B	80B5/B14-4
	36	136	40	39.29	2970	1.3		
	46	105	30	30.15	2720	1.9		
	57	84	25	24.44	2530	2.1		
	69	70	20	20.25	2380	2.1		
	95	51	15	14.67	2130	2.2		
	100	44	12.5	12.67	2030	4.1		
	133	36	10	10.50	1910	4.1		
	184	26	7.5	7.60	1710	4.2		
	22.9	211	40	39.29	3440	0.9	WKM63B	80B5/B14-6
	29.7	163	30	30.15	3150	1.2		
	37	131	25	24.44	2930	1.4		
	44	109	20	20.25	2760	1.4		
	61	79	15	14.67	2470	1.4		
	71	68	12.5	12.67	2360	2.6		
	86	58	10	10.50	2210	2.7		
	118	41	7.5	7.60	1990	2.7		
	14.0	339	200	200.66	5540	0.89	WKM75C	71B5-2
	18.5	255	150	149.29	5040	1.4		
	22.2	213	125	121.02	4750	1.4		
	28.2	168	100	100.81	4380	1.4		
	37	127	75	79.46	4000	1.6		
	45	105	60	62.43	3750	2.8		
	57	83	50	49.18	3470	2.9		
	47	103	60	59.04	3690	3.3	WKM75B	71B5-2
	58	83	50	48.18	3440	4.1		
	14.1	334	100	100.81	5520	0.7	WKM75C	80B5/B14-4
	18.6	255	50	79.46	5040	0.79		

P_{1n} [kW]	n_2 [r/min]	M_2 [Nm]	i 公称 Nominal	i 实际 Actual	F_{r2} [N]	f_B		
0.55	22.4	211	60	62.43	4730	1.4	WKM75C	80B5/B14-4
	28.5	166	50	49.18	4370	1.4		
	23.6	205	60	59.04	4660	1.7	WKM75B	80B5/B14-4
	29.1	166	50	48.18	4340	2.1		
	35	139	40	40.13	4080	2.2		
	46	104	30	29.66	3720	3.4		
	56	87	25	24.20	3500	3.5		
	14.4	328	60	62.43	5480	0.91	WKM75C	80B5/B14-6
	18.3	258	50	49.18	5060	0.93		
	15.1	319	60	59.04	5390	1.1	WKM75B	80B5/B14-6
	18.7	259	50	48.18	5030	1.4		
	22.4	215	40	40.13	4730	1.4		
	29.8	162	30	29.66	4310	2.2		
	36	135	25	24.20	4050	2.2		
	45	107	20	20.16	3740	2.3		
	60	81	15	15.88	3410	2.5		
	9.5	498	300	295.18	7990	1.0	WKM90C	71B5-2
	11.6	407	250	240.89	7470	1.2		
	14.0	339	200	200.66	7030	1.4		
	18.5	255	150	151.20	6390	2.0		
	22.2	213	125	125.95	6010	2.3		
	28.2	168	100	99.22	5550	2.3		
	37	127	75	75.45	5070	2.4		
	45	105	60	62.43	4760	4.6		
	57	83	50	49.18	4390	4.6		
	9.3	511	150	151.20	8050	1.0	WKM90C	80B5/B14-4
	11.1	425	125	125.95	7580	1.1		
	14.1	335	100	99.22	7000	1.1		
	18.6	255	75	75.45	6390	1.2		
	22.4	211	60	62.43	6000	2.3		
	28.5	166	50	49.18	5540	2.3		
	23.7	204	60	59.04	5890	2.5	WKM90B	80B5/B14-4
	29.1	166	50	48.18	5500	3.0		
	35	139	40	40.13	5170	3.5		
	9.1	521	100	99.22	8110	0.71	WKM90C	80B5/B14-6
	11.9	396	75	75.45	7400	0.74		
	14.4	328	60	62.43	6950	1.5		
	18.3	258	50	49.18	6420	1.5		
	15.2	317	60	59.04	6820	1.6	WKM90B	80B5/B14-6
	18.7	259	50	48.18	6370	1.9		
	22.4	215	40	40.13	6000	2.2		
	29.8	162	30	30.24	5460	3.1		
	36	135	25	25.19	5130	3.5		
0.75	57	114.5	50	48.86	2220	1.1	WKM50B	80B5/B14-2
	70	94	40	40.09	2070	1.3		
	95	69	30	29.33	1870	1.8		
	116	57	25	24.07	1750	2.2		
	139	48	20	20.21	1650	2.0		
	188	35	15	14.92	1490	2.2		
	48	138	30	29.33	2350	0.9	WKM50B	80B5/B14-4
	58	113	25	24.07	2200	1.1		
	69	95	20	20.21	2080	1.1		
	94	70	15	14.92	1880	1.1		
	112	59	12.5	12.47	1770	2.2		
	134	49	10	10.47	1670	2.0		
	181	36	7.5	7.73	1510	2.2		

P_{1n} [kW]	n_2 [r/min]	M_2 [Nm]	i 公称 Nominal	i 实际 Actual	F_{r2} [N]	f_B		
0.75	60	110	15	14.92	2180	0.71	WKM50B	90B5/B14-6
	72	91	12.5	12.47	2050	1.4		
	86	77	10	10.47	1930	1.3		
	116	57	7.5	7.73	1750	1.4		
	38	169	75	73.33	2900	0.63	WKM63C	80B5/B14-2
	44	146	60	63.33	2760	1.2		
	53	121	50	52.48	2590	1.2		
	46	142	60	60.89	2720	1.38	WKM63B	80B5/B14-2
	57	114.5	50	48.45	2530	1.7		
	71	92	40	39.29	2350	1.9		
	92	71	30	30.15	2160	2.7		
	115	58	25	24.44	2010	3.0		
	138	48	20	20.25	1890	3.0		
	28.7	229	50	48.45	3190	0.9	WKM63B	80B5/B14-4
	36	185	40	39.29	2970	1.0		
	46	143	30	30.15	2720	1.4		
	57	115	25	24.44	2530	1.6		
	69	95	20	20.25	2360	1.6		
	95	69	15	14.67	2130	1.6		
	110	60	12.5	12.67	2030	3.0		
	133	49	10	10.50	1910	3.0		
	184	36	7.5	7.60	1710	3.1		
	37	179	25	24.44	2930	1.0	WKM63B	90B5/B14-6
	44	148	20	20.25	2760	1.0		
	61	107	15	14.67	2470	1.0		
	71	93	12.5	12.67	2360	1.9		
	86	77	10	10.50	2210	2.0		
	118	56	7.5	7.60	1990	2.0		
	18.5	348	150	149.29	5040	1.0	WKM75C	80B5/B14-2
	22.2	290	125	121.02	4750	1.0		
	28.2	228	100	100.81	4380	1.1		
	37	174	75	79.41	4000	1.2		
	45	144	60	62.43	3750	2.1		
	57	113	50	49.18	3470	2.1		
	47	140	60	59.04	3690	2.4	WKM75B	80B5/B14-2
	58	113.5	50	48.18	3440	3.0		
	70	94	40	40.13	3240	3.1		
	22.4	287	60	62.43	4730	1.0	WKM75C	80B5/B14-4
	28.5	226	50	49.18	4370	1.1		
	23.6	280	60	59.04	4660	1.3	WKM75B	80B5/B14-4
	29.1	227	50	48.18	4340	1.5		
	35	189	40	40.13	4080	1.6		
	46	142	30	29.66	3720	2.5		
	56	119	25	24.20	3500	2.5		
	71	93	20	20.16	3230	2.8		
	18.7	353	50	48.18	5030	1.0	WKM75B	90B5/B14-6
	22.4	294	40	40.13	4730	1.0		
	29.8	221	30	29.66	4310	1.6		
	36	184	25	24.20	4050	1.6		
	45	145	20	19.84	3740	1.7		
	60	110	15	15.88	3410	1.8		
	72	91	12.5	12.49	3210	3.3		
	11.6	555	250	240.89	7470	0.9	WKM90C	80B5/B14-2
	14.0	462	200	200.66	7030	1.0		
	18.5	348	150	151.20	6390	1.4		
	22.2	290	125	125.95	6010	1.7		

P_{1n} [kW]	n_2 [r/min]	M_2 [Nm]	i 公称 Nominal	i 实际 Actual	F_{r2} [N]	f_B		
0.75	28.2	228	100	99.22	5550	1.7	WKM90C	80B5/B14-2
	37	174	75	75.45	5070	1.7		
	45	144	60	62.43	4760	3.3		
	57	113	50	49.18	4390	3.4		
	14.1	457	100	99.22	7000	0.83	WKM90C	80B5/B14-4
	18.6	347	75	75.45	6390	0.86		
	22.4	287	60	62.43	6000	1.7		
	28.5	226	50	49.18	5540	1.7		
	23.7	278	60	59.04	5890	1.8	WKM90B	80B5/B14-4
	29.1	227	50	48.18	5500	2.2		
	35	189	40	40.13	5170	2.5		
	46	142	30	30.24	4710	3.5		
	56	119	25	25.19	4430	4.0		
	14.4	447	60	62.43	6950	1.1	WKM90C	90B5/B14-6
	18.3	352	50	49.18	6420	1.1		
	15.2	432	60	59.04	6820	1.2	WKM90B	90B5/B14-6
	18.7	353	50	48.18	6370	1.4		
	22.4	294	40	40.13	6000	1.6		
	29.8	221	30	30.24	5460	2.3		
	36	184	25	25.19	5130	2.6		
	45	145	20	19.84	4740	2.6		
	60	110	15	15.09	4330	2.7		
1.1	70	138	40	40.09	2070	0.9	WKM50B	80B5/B14-2
	95	101	30	29.33	1870	1.3		
	116	83	25	24.07	1750	1.5		
	139	69	20	20.21	1650	1.4		
	188	52	15	14.92	1490	1.5		
	225	43	12.5	12.47	1400	2.9		
	267	36	10	10.47	1320	2.7		
	362	26	7.5	7.73	1200	2.9		
	69	140	20	20.21	2080	0.7	WKM50B	90B5/B14-4
	94	103	15	14.92	1880	0.76		
	112	86	12.5	12.47	1770	1.5		
	134	72	10	10.47	1670	1.4		
	181	53	7.5	7.73	1510	1.5		
	72	134	12.5	12.47	2050	1.0	WKM50B	90B5/B14-6
	86	112	10	10.47	1930	0.9		
	116	83	7.5	7.73	1750	1.0		
	57	168	50	48.45	2530	1.2	WKM63B	80B5/B14-2
	71	136	40	39.29	2350	1.3		
	92	105	30	30.15	2160	1.9		
	115	84	25	24.44	2010	2.1		
	138	69	20	20.25	1890	2.1		
	191	51	15	14.67	1690	2.1		
	221	44	12.5	12.67	1610	4.0		
	267	36	10	10.50	1510	4.0		
	368	26	7.5	7.60	1360	4.1		
	46	209	30	30.15	2720	1.0	WKM63B	90B5/B14-4
	57	169	25	24.44	2530	1.1		
	69	140	20	20.25	2380	1.1		
	95	101	15	14.67	2130	1.1		
	110	87	12.5	12.67	2030	2.1		
	133	72	10	10.50	1910	2.1		
	184	52	7.5	7.60	1710	2.1		

P_{1n} [kW]	n_2 [r/min]	M_2 [Nm]	i 公称 Nominal	i 实际 Actual	F_{r2} [N]	f_B		
1.1	71	136	12.5	12.67	2360	1.3	WKM63B	90B5/B14-6
	86	113	10	10.50	2210	1.3		
	118	82	7.5	7.60	1990	1.3		
	28.2	334.5	100	100.81	4380	0.58	WKM75C	80B5/B14-2
	37	254	75	79.46	4000	1.15		
	45	211	60	62.43	3750	1.4		
	57	166	50	49.18	3470	1.4		
	47	205.5	60	59.04	3690	1.7	WKM75B	80B5/B14-2
	58	166	50	48.18	3440	2.1		
	70	139	40	40.13	3240	2.1		
	93	105	30	29.66	2950	3.3		
	111	87	25	24.20	2770	3.3		
	29.1	333	50	48.18	4340	1.1	WKM75B	90B5/B14-4
	35	277	40	40.13	4080	1.1		
	46	209	30	29.66	3720	1.7		
	56	174	25	24.20	3500	1.7		
	71	137	20	20.16	3230	1.8		
	93	104	15	15.88	2950	1.9		
	112	86	12.5	12.49	2770	3.5		
	29.8	325	30	29.66	4310	1.1	WKM75B	90B5/B14-6
	36	271	25	24.20	4050	1.1		
	45	213	20	20.16	3740	1.1		
	60	162	15	15.88	3410	1.2		
	72	134	12.5	12.49	3210	2.2		
	91	106	10	9.84	2960	2.3		
	120	80	7.5	7.48	2700	2.5		
	18.5	511	150	151.20	6390	1.0	WKM90C	80B5/B14-2
	22.2	425	125	125.95	6010	1.1		
	28.2	335	100	99.22	5550	1.1		
	37	255	75	75.45	5070	1.2		
	45	211	60	62.43	4760	2.3		
	57	166	50	49.18	4390	2.3		
	47	203.5	60	59.04	4670	2.4	WKM90B	80B5/B14-2
	58	166	50	48.18	4360	2.9		
	70	162	40	40.13	4110	3.3		
	22.4	422	60	62.43	6000	1.1	WKM90C	90B5/B14-4
	28.5	332	50	49.18	5540	1.1		
	23.7	408	60	59.04	5890	1.2	WKM90B	90B5/B14-4
	29.1	333	50	48.18	5500	1.5		
	35	277	40	40.13	5170	1.7		
	46	209	30	30.24	4710	2.4		
	56	174	25	25.19	4430	2.8		
	71	137	20	19.84	4090	2.8		
	18.7	517	50	48.18	6370	1.0	WKM90B	90B5/B14-6
	22.4	431	40	40.13	6000	1.1		
	29.8	325	30	30.24	5460	1.5		
	36	271	25	25.19	5130	1.8		
	45	213	20	19.84	4740	1.8		
	60	162	15	15.09	4330	1.9		
	72	134	12.5	12.49	4060	3.6		
	91	106	10	9.84	3750	3.6		
	120	80	7.5	7.48	3420	3.7		
1.5	116	113.5	25	24.07	1750	1.1	WKM50B	90B5/B14-2
	139	95	20	20.21	1650	1.03		
	188	70	15	14.92	1490	1.1		
	225	59	12.5	12.47	1400	2.2		

P_{1n} [kW]	n_2 [r/min]	M_2 [Nm]	i 公称 Nominal	i 实际 Actual	F_{r2} [N]	f_B		
1.5	267	49	10	10.47	1320	2.0	WKM50B	90B5/B14-2
	362	36	7.5	7.73	1200	2.2		
	94	141	15	14.92	1880	0.6	WKM50B	90B5/B14-4
	112	117	12.5	12.47	1770	1.1		
	134	99	10	10.47	1670	1.0		
	181	73	7.5	7.73	1510	1.1		
	57	229	50	48.45	2530	0.9	WKM63B	90B5/B14-2
	71	185	40	39.29	2350	0.95		
	92	143	30	30.15	2160	1.4		
	115	115	25	24.44	2010	1.5		
	138	95	20	20.25	1890	1.5		
	191	69	15	14.67	1690	1.5		
	221	60	12.5	12.67	1610	3.0		
	267	49	10	10.50	1510	3.0		
	368	36	7.5	7.60	1360	3.0		
	57	230	25	24.44	2530	0.8	WKM63B	90B5/B14-4
	69	191	20	20.25	2380	0.8		
	95	138	15	14.67	2130	0.8		
	110	119	12.5	12.67	2030	1.5		
	133	99	10	10.50	1910	1.5		
	184	72	7.5	7.60	1710	1.5		
	37	347	75	79.46	4000	0.6	WKM75C	90B5/B14-2
	45	287	60	62.43	3750	1.0		
	57	226	50	49.18	3470	1.1		
	47	280	60	59.04	3690	1.2	WKM75B	90B5/B14-2
	58	227	50	48.18	3440	1.5		
	70	189	40	40.13	3240	1.5		
	93	142	30	29.66	2950	2.4		
	111	118	25	24.20	2770	2.5		
	141	93	20	20.16	2560	2.5		
	35	378	40	40.13	4080	0.8	WKM75B	90B5/B14-4
	46	285	30	29.66	3720	1.2		
	56	237	25	24.20	3500	1.3		
	71	187	20	20.16	3230	1.3		
	93	142	15	15.88	2950	1.4		
	112	118	12.5	12.49	2770	2.6		
	142	93	10	9.84	2550	2.6		
	187	70	7.5	7.48	2330	2.8		
	45	291	20	20.16	3740	0.83	WKM75B	100B5/B14-6
	60	221	15	15.88	3410	0.91		
	72	183	12.5	12.49	3210	1.6		
	91	144	10	9.84	2960	1.7		
	120	110	7.5	7.48	2700	1.8		
	28.2	457	100	99.22	5550	0.83	WKM90C	90B5/B14-2
	37	347	75	75.45	5070	0.86		
	45	287	60	62.43	4760	1.7		
	57	226	50	49.18	4390	1.7		
	47	278	60	59.04	4670	1.8	WKM90B	90B5/B14-2
	58	227	50	48.18	4360	2.2		
	70	189	40	40.13	4110	2.5		
	93	142	30	30.24	3740	3.4		
	111	118	25	25.19	3520	4.0		
	29.1	454	50	48.18	5500	1.1	WKM90B	90B5/B14-4
	35	378	40	40.13	5170	1.3		
	46	285	30	30.24	4710	1.8		
	56	237	25	25.19	4430	2.0		

P_{1n} [kW]	n_2 [r/min]	M_2 [Nm]	i 公称 Nominal	i 实际 Actual	F_{r2} [N]	f_B		
1.5	71	187	20	19.84	4090	2.0	WKM90B	90B5/B14-4
	93	142	15	15.09	3730	2.1		
	112	118	12.5	12.49	3510	4.1		
	142	93	10	9.84	3240	4.1		
	187	70	7.5	7.48	2950	4.3		
	30	443	30	30.24	5460	1.1	WKM90B	100B5/B14-6
	36	369	25	25.19	5130	1.3		
	45	291	20	19.84	4740	1.3		
	60	221	15	15.09	4330	1.4		
	72	183	12.5	12.49	4060	2.6		
	91	144	10	9.84	3750	2.6		
	120	110	7.5	7.48	3420	2.7		
2.2	139	140	20	20.21	1650	0.7	WKM50B	90B5/B14-2
	188	103	15	14.92	1490	0.76		
	225	86	12.5	12.47	1400	1.5		
	267	72	10	10.47	1320	1.35		
	362	54	7.5	7.73	1200	1.5		
	92	209	30	30.15	2160	0.9	WKM63B	90B5/B14-2
	115	168	25	24.44	2010	1.0		
	138	140	20	20.25	1890	1.0		
	191	101	15	14.67	1690	1.0		
	221	87	12.5	12.67	1610	2.0		
	267	72	10	10.50	1510	2.0		
	368	53	7.5	7.60	1360	2.0		
	58	333	50	48.18	3440	1.0	WKM75B	90B5/B14-2
	70	277	40	40.13	3240	1.0		
	93	208	30	29.66	2950	1.6		
	111	174	25	24.20	2770	1.7		
	141	137	20	20.16	2560	1.7		
	186	104	15	15.88	2340	1.9		
	224	86	12.5	12.49	2190	3.4		
	56	348	25	24.20	3500	0.86	WKM75B	100B5/B14-4
	71	274	20	20.16	3230	0.9		
	93	208	15	15.88	2950	1.0		
	112	172	12.5	12.49	2770	1.7		
	142	136	10	9.84	2550	1.8		
	187	103	7.5	7.48	2330	1.9		
	60	324	15	15.88	3410	0.6	WKM75B	112B5/B14-6
	72	268	12.5	12.49	3210	1.1		
	91	211	10	9.84	2960	1.1		
	120	161	7.5	7.48	2700	1.2		
	37	510	75	75.45	5070	0.6	WKM90C	90B5/B14-2
	45	422	60	62.43	4760	1.1		
	57	332	50	49.18	4390	1.1		
	47	407	60	59.04	4670	1.2	WKM90B	90B5/B14-2
	58	333	50	48.18	4360	1.5		
	70	277	40	40.13	4110	1.7		
	93	208	30	30.24	3740	2.3		
	111	174	25	25.19	3520	2.7		
	141	137	20	19.84	3250	2.7		
	35	554	40	40.13	5170	0.9	WKM90B	100B5/B14-4
	46	418	30	30.24	4710	1.2		
	56	348	25	25.19	4430	1.4		
	71	274	20	19.84	4090	1.4		
	93	208	15	15.09	3730	1.4		
	112	172	12.5	12.49	3510	2.8		

P_{1n} [kW]	n_2 [r/min]	M_2 [Nm]	i 公称 Nominal	i 实际 Actual	F_{r2} [N]	f_B		
2.2	142	136	10	9.84	3240	2.8	WKM90B	100B5/B14-4
	187	103	7.5	7.48	2950	2.9		
	36	541	25	25.19	5130	0.9	WKM90B	112B5/B14-6
	45	426	20	19.84	4740	0.9		
	60	324	15	15.09	4330	0.93		
	72	268	12.5	12.49	4060	1.8		
	91	211	10	9.84	3750	1.8		
	120	161	7.5	7.48	3420	1.9		
3	70	378	40	40.13	3240	0.77	WKM75B	112B5/B14-2
	93	285	30	29.66	2950	1.2		
	111	237	25	24.20	2770	1.2		
	141	187	20	20.16	2560	1.25		
	186	142	15	15.88	2340	1.4		
	224	117	12.5	12.49	2190	2.5		
	285	93	10	9.84	2030	2.5		
	374	70	7.5	7.48	1850	2.7		
	9.3	284	15	15.88	2950	0.7	WKM75B	100B5/B14-4
	112	235	12.5	12.49	2770	1.3		
	142	185	10	9.84	2550	1.3		
	187	141	7.5	7.48	2330	1.4		
	47	556	60	59.04	4670	0.9	WKM90B	100B5/B14-2
	58	453	50	48.18	4360	1.1		
	70	378	40	40.13	4110	1.24		
	93	285	30	30.24	3740	1.7		
	111	237	25	25.19	3520	2.0		
	141	187	20	19.84	3250	2.0		
	186	142	15	15.09	2960	2.1		
	224	117	12.5	12.49	2780	4.0		
	285	93	10	9.84	2570	4.0		
	374	70	7.5	7.48	2340	4.2		
	56	474	25	25.19	4430	1.0	WKM90B	100B5/B14-4
	71	374	20	19.84	4090	1.0		
	93	284	15	15.09	3730	1.1		
	112	235	12.5	12.49	3510	2.0		
	142	185	10	9.84	3240	2.1		
	187	141	7.5	7.48	2950	2.1		
4	111	316	25	24.20	2770	0.9	WKM75B	112B5/B14-2
	141	248.5	20	20.16	2560	0.9		
	186	190	15	15.88	2340	1.0		
	224	156.5	12.5	12.49	2190	1.8		
	285	123	10	9.84	2030	1.9		
	374	94	7.5	7.48	1850	2.1		
	112	314	12.5	12.49	2770	1.0	WKM75B	112B5/B14-4
	142	247	10	9.84	2550	1.0		
	187	188	7.5	7.48	2330	1.1		
	70	504	40	40.13	4110	0.9	WKM90B	112B5/B14-2
	93	380	30	30.24	3740	1.3		
	111	316	25	25.19	3520	1.5		
	141	248.5	20	19.84	3250	1.5		
	186	190	15	15.09	2960	1.5		
	224	156.5	12.5	12.49	2780	3.0		
	285	123	10	9.84	2570	3.0		
	374	94	7.5	7.48	2340	3.1		
	71	498	20	19.84	4090	0.74	WKM90B	112B5/B14-4
	93	379	15	15.09	3730	0.77		
	112	314	12.5	12.49	3510	1.5		
	142	247	10	9.84	3240	1.5		
	187	188	7.5	7.48	2950	1.6		

6.3 WKMS 性能参数 / Performance parameter

n_1=1400r/min

f_B=1

$M_{2\,max}$ [Nm]	n_2 [r/min]	i 公称 Nominal	i 实际 Actual	P_{1MAX} [kW]	F_{r2} [N]	F_{r1} [N]	
130	4.8	300	291.79	0.07	4100	400	WKMS50C
130	5.7	250	244.29	0.09	4100	400	
130	7	200	200.44	0.11	4100	400	
130	10	150	146.67	0.14	4000	400	
130	12	125	120.34	0.18	3770	400	
100	14	100	101.04	0.16	3560	400	
80	19	75	74.62	0.17	3220	400	
130	22	60	62.36	0.34	3030	400	
100	27	50	52.36	0.31	2860	400	
130	24	60	58.36	0.35	2960	400	WKMS50B
130	29	50	48.86	0.42	2790	400	
130	35	40	40.09	0.52	2610	400	
130	48	30	29.33	0.71	2350	400	
130	58	25	24.07	0.86	2200	400	
100	69	20	20.21	0.79	2080	400	
80	94	15	14.92	0.85	1880	400	
130	112	12.5	12.47	1.7	1770	400	
100	134	10	10.47	1.5	1670	400	
80	181	7.5	7.73	1.6	1510	400	
200	4.6	300	304.46	0.11	4800	400	WKMS63C
200	5.7	250	242.26	0.13	4800	400	
180	7.1	200	196.43	0.15	4800	400	
200	9.2	150	150.74	0.21	4650	400	
180	11	125	122.22	0.24	4330	400	
150	14	100	101.27	0.24	4070	400	
110	19	75	73.33	0.24	3650	400	
180	22	60	63.33	0.46	3480	400	
150	27	50	52.48	0.47	3270	400	
200	23	60	60.89	0.53	3430	530	WKMS63B
200	29	50	48.45	0.65	3190	530	
180	36	40	39.29	0.73	2970	530	
200	46	30	30.15	1.1	2720	530	
180	57	25	24.44	1.2	2530	530	
150	69	20	20.25	1.2	2380	530	
110	95	15	14.67	1.2	2130	530	
180	110	12.5	12.67	2.3	2030	530	
150	133	10	10.50	2.3	1910	530	
110	184	7.5	7.60	2.3	1710	530	
350	4.7	300	295.18	0.19	6500	560	WKMS75C
350	5.8	250	240.89	0.24	6500	560	
300	7	200	200.66	0.24	6500	560	
350	9.3	150	149.29	0.38	6500	560	
300	11	125	121.02	0.39	5980	560	
240	14	100	100.81	0.39	5520	560	
200	19	75	79.41	0.43	5040	560	
300	22	60	62.43	0.78	4730	560	
240	28	50	49.18	0.79	4370	560	
350	24	60	59.04	0.94	4660	860	WKMS75B
350	29	50	48.18	1.2	4340	860	
300	35	40	40.13	1.2	4080	860	
350	46	30	29.66	1.8	3720	860	
300	56	25	24.20	1.9	3500	860	

n_1=1400r/min

$M_{2\,max}$ [Nm]	n_2 [r/min]	i 公称 Nominal	i 实际 Actual	P_{1MAX} [kW]	F_{r2} [N]	F_{r1} [N]	
240	71	20	20.16	1.9	3230	860	WKMS75B
200	93	15	15.88	2.1	2950	860	
300	112	12.5	12.49	3.8	2770	860	
240	142	10	9.84	3.9	2550	860	
200	187	7.5	7.48	4.3	2330	860	
500	4.7	300	295.18	0.27	8300	560	WKMS90C
500	5.8	250	240.89	0.34	8300	560	
480	7	200	200.66	0.39	8300	560	
500	9.3	150	151.20	0.54	8050	560	
480	11	125	125.95	0.62	7580	560	
380	14	100	99.22	0.62	7000	560	
300	19	75	75.45	0.65	6390	560	
480	22	60	62.43	1.3	6000	560	
380	28	50	49.18	1.3	5540	560	
500	24	60	59.04	1.3	5890	1260	WKMS90B
500	29	50	48.18	1.7	5500	1260	
480	35	40	40.13	1.9	5170	1260	
500	46	30	30.24	2.6	4710	1260	
480	56	25	25.19	3.0	4430	1260	
380	71	20	19.84	3.1	4090	1260	
300	93	15	15.09	3.2	3730	1260	
480	112	12.5	12.49	6.1	3510	1260	
380	142	10	9.84	6.2	3240	1260	
300	187	7.5	7.48	6.4	2950	1260	

7.外形尺寸图集 / OUTLINE DIMENSION SHEET

7.1 WKM.. 外形尺寸 / Outline Dimension

WKM 50B..

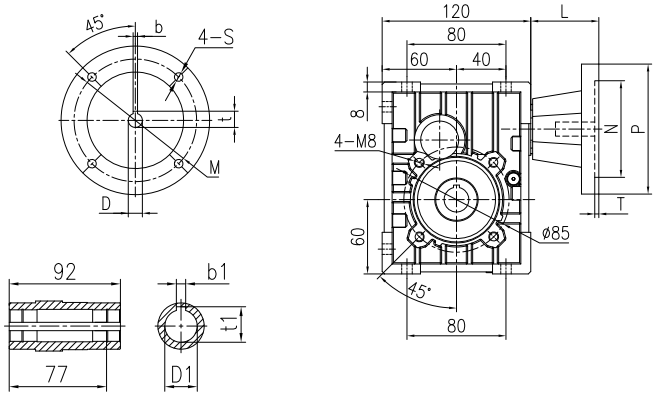

FA

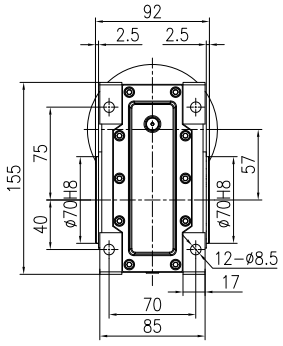

FB

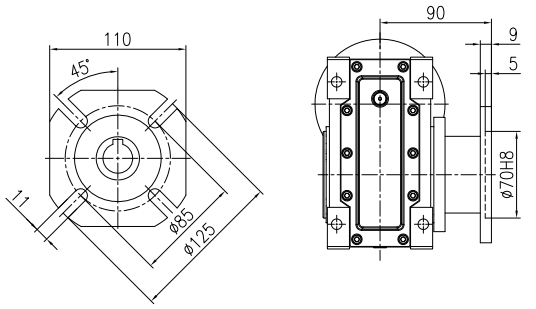

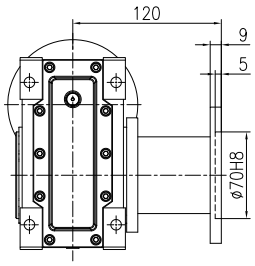

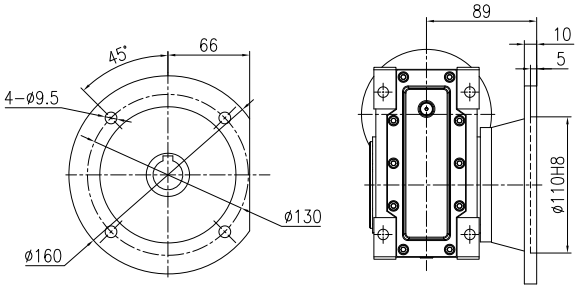

FC

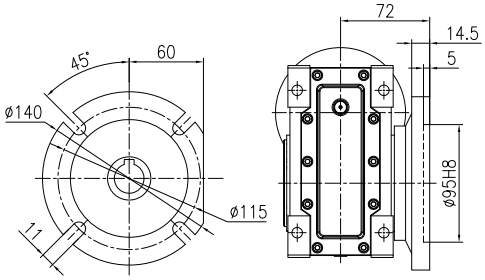

FD

IEC	D_{E8}	b	t	P	M	N	S	T	L
63B5	11	4	12.8	140	115	95	9	3.5	45
71B5	14	5	16.3	160	130	110	9	4	52
71B14	14	5	16.3	105	85	70	7	3	52
80B5	19	6	21.8	200	165	130	11	4	62
80B14	19	6	21.8	120	100	80	7	3.5	62
90B5	24	8	27.3	200	165	130	11	4	72
90B14	24	8	27.3	140	115	95	9	3.5	72

$D_{1\,H7}$	b_1	t_1
20*	6*	22.8*
24	8	27.3
25*	8*	28.1*

* 非标产品，订单时请说明
* Only on request

重量（不包括马达）
≈4.1kg

Weight without motor
≈4.1kg

WKM 50C..

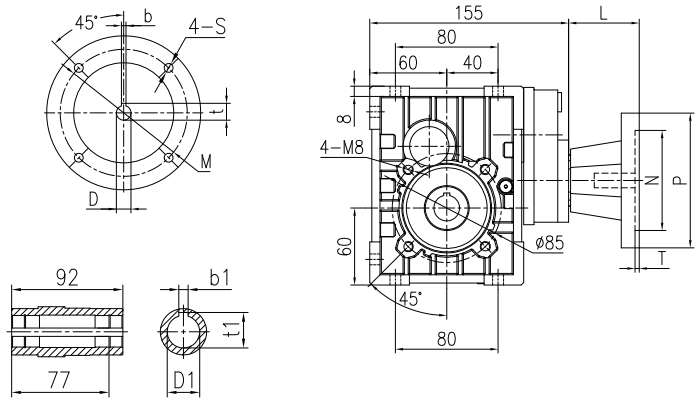

FA

FB

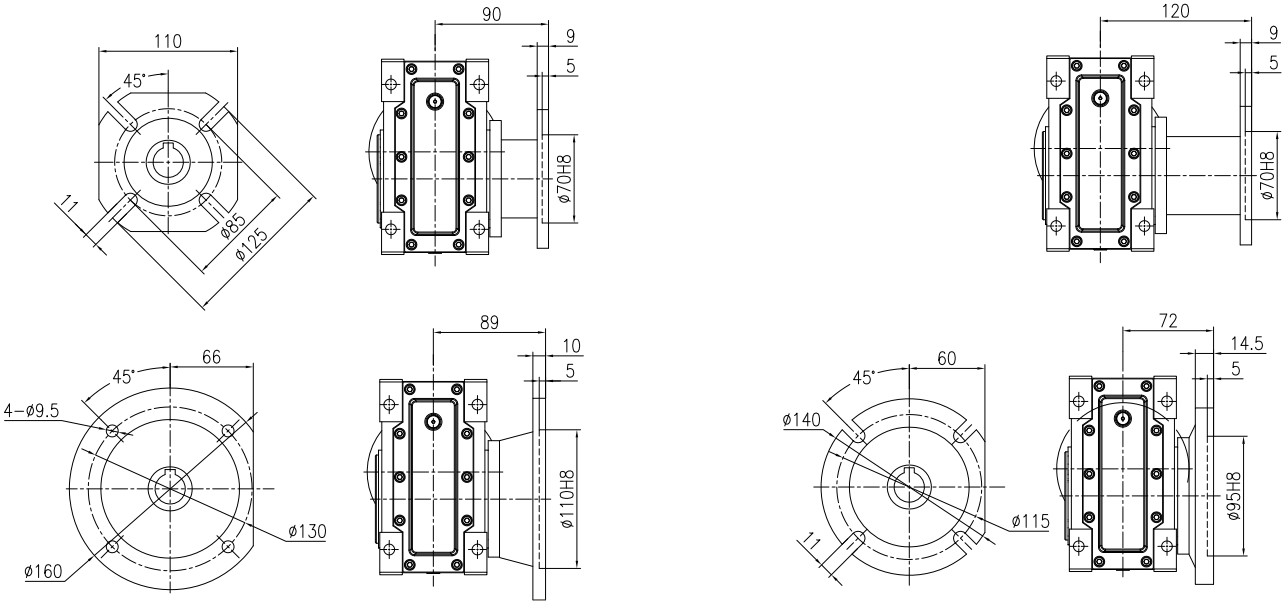

FC

FD

IEC	D_{E8}	b	t	P	M	N	S	T	L
63B5	11	4	12.8	140	115	95	9	3.5	45
71B5	14	5	16.3	160	130	110	9	4	52
71B14	14	5	16.3	105	85	70	7	3	52

$D_{1\,H7}$	b_1	t_1
20*	6*	22.8*
24	8	27.3
25*	8*	28.1*

* 非标产品，订单时请说明
* Only on request

重量（不包括马达）
≈4.7kg

Weight without motor
≈4.7kg

WKM 63B..

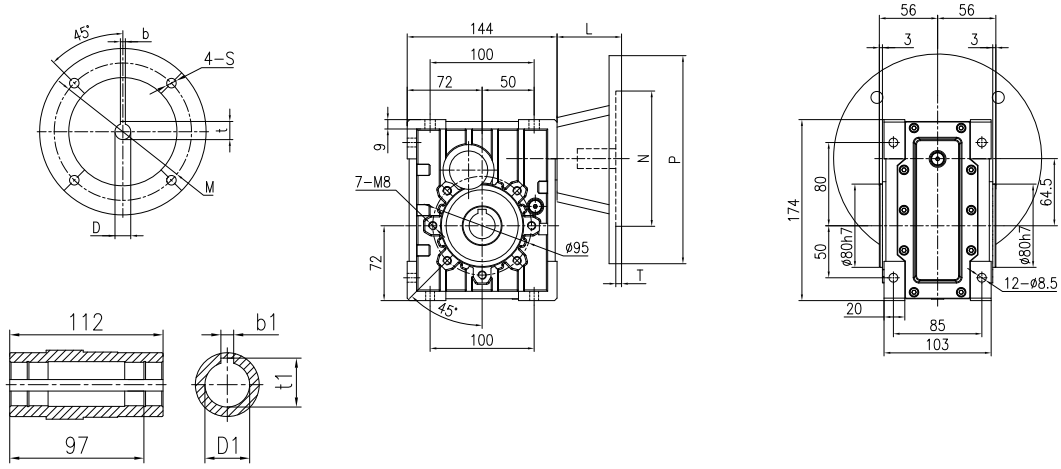

FA

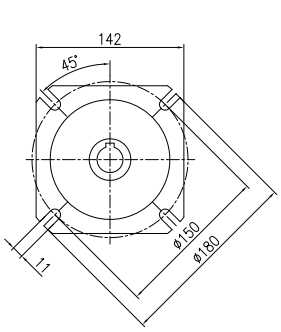

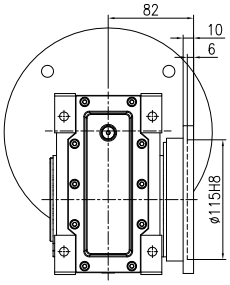

FB

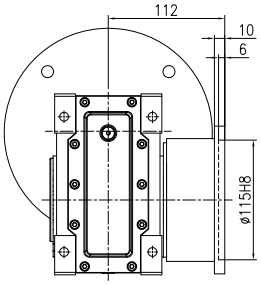

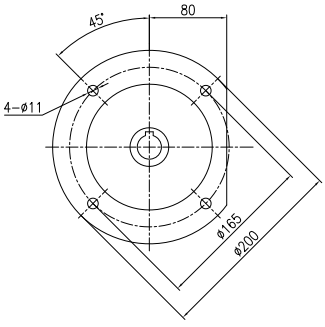

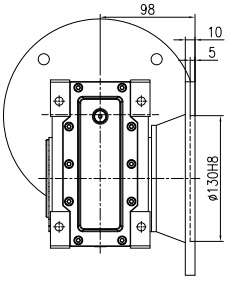

FC

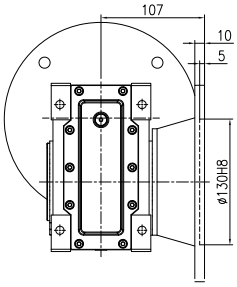

FD

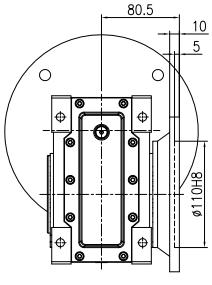

FE

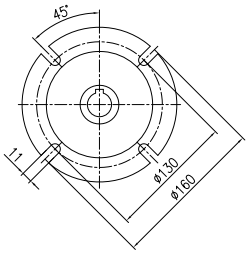

IEC	D_{E8}	b	t	P	M	N	S	T	L	$D_{1\,H7}$	b_1	t_1
63B5	11	4	12.8	140	115	95	9	3.5	45	25	8	28.3
71B5	14	5	16.3	160	130	110	9	4	52			
71B14	14	5	16.3	105	85	70	7	3	52			
80B5	19	6	21.8	200	165	130	11	4	62			
80B14	19	6	21.8	120	100	80	7	3.5	62			
90B5	24	8	27.3	200	165	130	11	4	72			
90B14	24	8	27.3	140	115	95	9	3.5	72			

* 非标产品，订单时请说明
* Only on request

重量（不包括马达）
≈6.1kg

Weight without motor
≈6.1kg

WKM 63C..

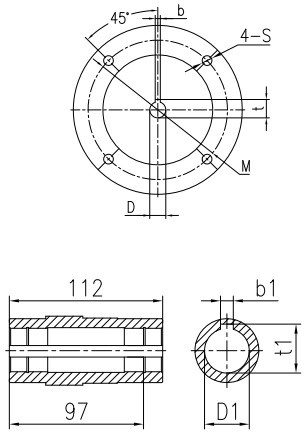

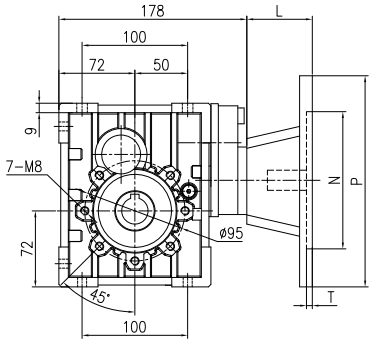

FA

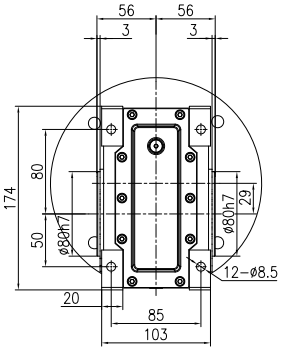

FB

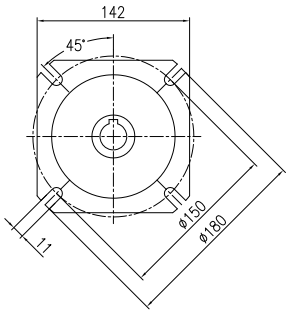

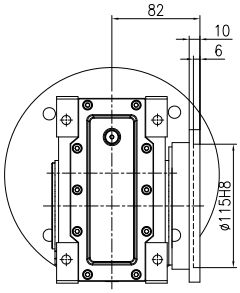

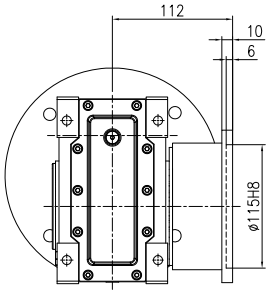

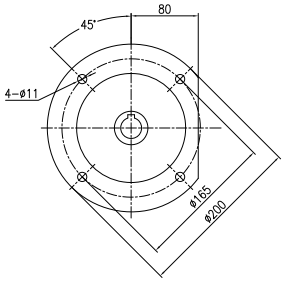

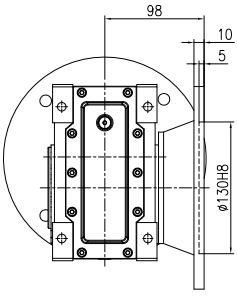

FC

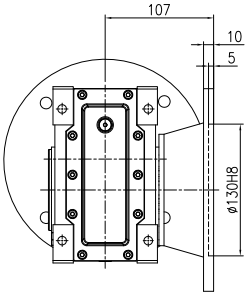

FD

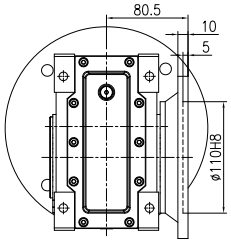

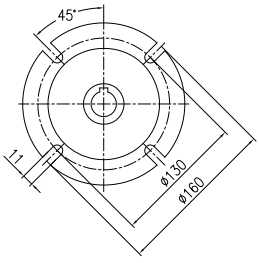

FE

IEC	D_{E8}	b	t	P	M	N	S	T	L
63B5	11	4	12.8	140	115	95	9	3.5	45
71B5	14	5	16.3	160	130	110	9	4	52
71B14	14	5	16.3	105	85	70	7	3	52
80B5	19	6	21.8	200	165	130	11	4	62
80B14	19	6	21.8	120	100	80	7	3.5	62

$D_{1\,H7}$	b_1	t_1
25	8	28.3

* 非标产品，订单时请说明
* Only on request

重量（不包括马达）
≈6.7kg

Weight without motor
≈6.7kg

WKM 75B..

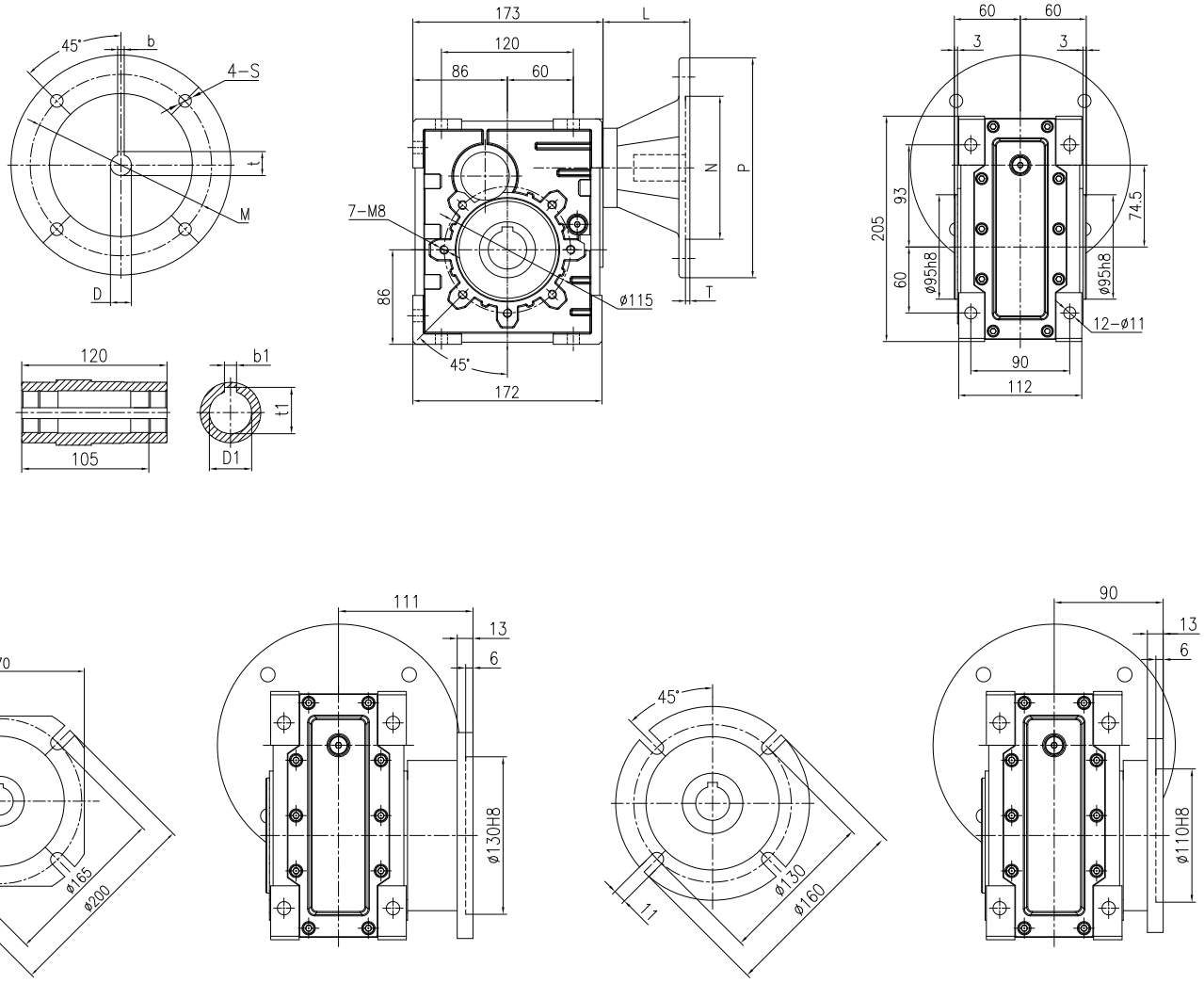

FA

FB

IEC	D_{E8}	b	t	P	M	N	S	T	L
63B5	11	4	12.8	140	115	95	9	3.5	53
71B5	14	5	16.3	160	130	110	9	4	60
80B5	19	6	21.8	200	165	130	11	4	79
80B14	19	6	21.8	120	100	80	6.5	3.5	69
90B5	24	8	27.3	200	165	130	11	4	79
90B14	24	8	27.3	140	115	95	9	3.5	79
100/112B5	28	8	31.3	250	215	180	13.5	4	89
100/112B14	28	8	31.3	160	130	110	9	4.5	89

$D_{1\,H8}$	b_1	t_1
28	8	31.3
30*	8*	33.3*
35*	10*	38.3*

* 非标产品，订单时请说明
* Only on request

重量(不包括马达)
≈9.5kg

Weight without motor
≈9.5kg

WKM 75C..

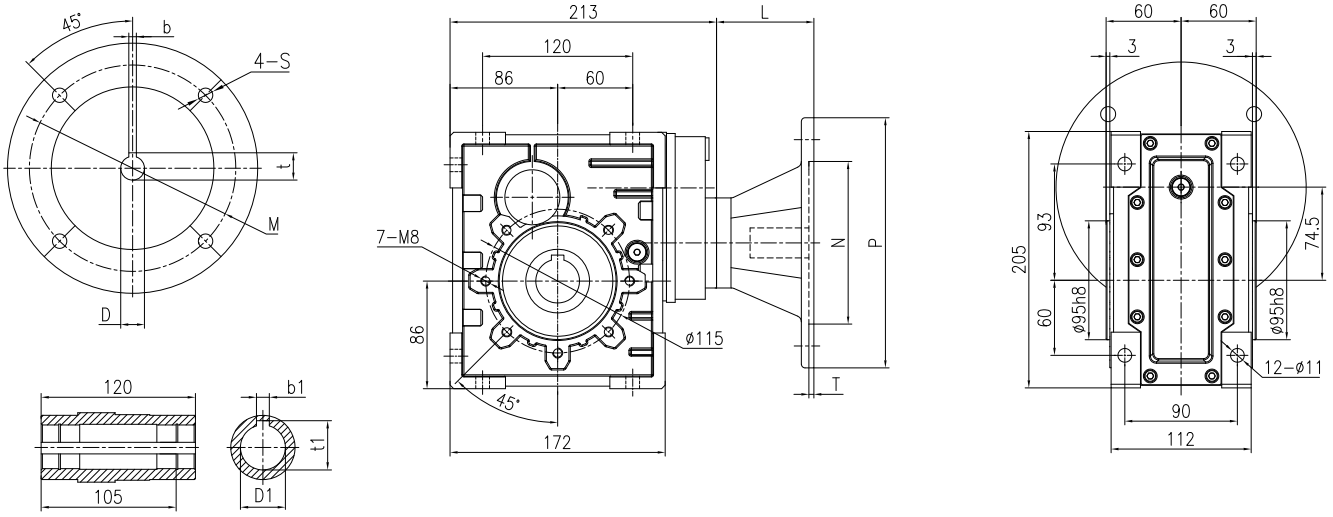

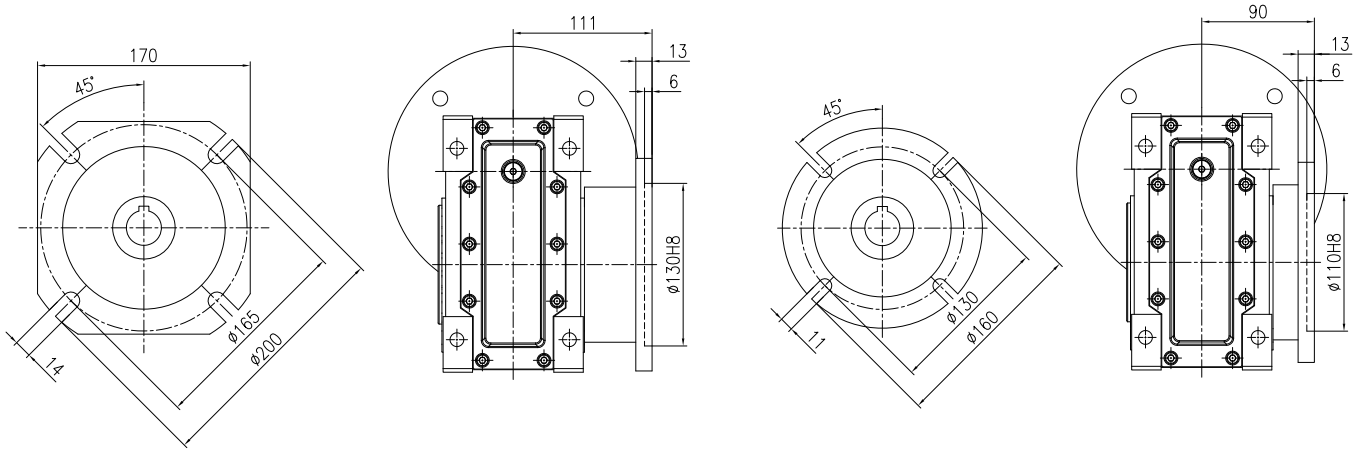

FA

FB

IEC	D_{E8}	b	t	P	M	N	S	T	L
63B5	11	4	12.8	140	115	95	9	3.5	53
71B5	14	5	16.3	160	130	110	9	4	60
80B5	19	6	21.8	200	165	130	11	4	79
80B14	19	6	21.8	120	100	80	6.5	3.5	69
90B5	24	8	27.3	200	165	130	11	4	79
90B14	24	8	27.3	140	115	95	9	3.5	79

$D_{1\,H8}$	b_1	t_1
28	8	31.3
30*	8*	33.3*
35*	10*	38.3*

* 非标产品，订单时请说明
* Only on request

重量(不包括马达)
≈10.9kg

Weight without motor
≈10.9kg

WKM 90B..

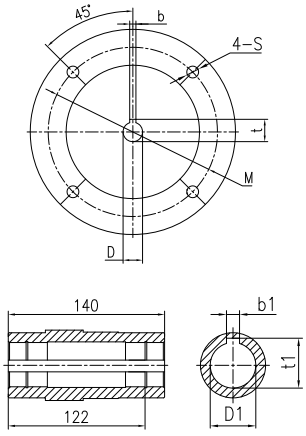

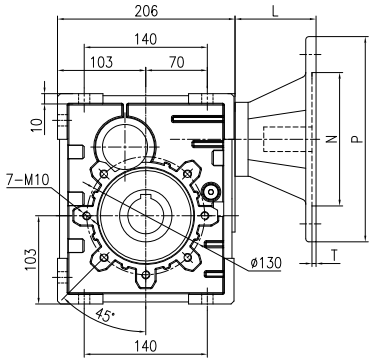

FA

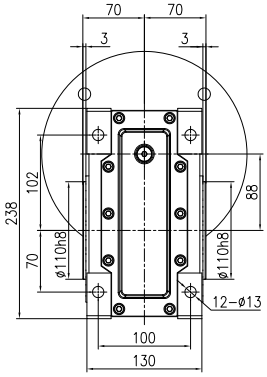

FB

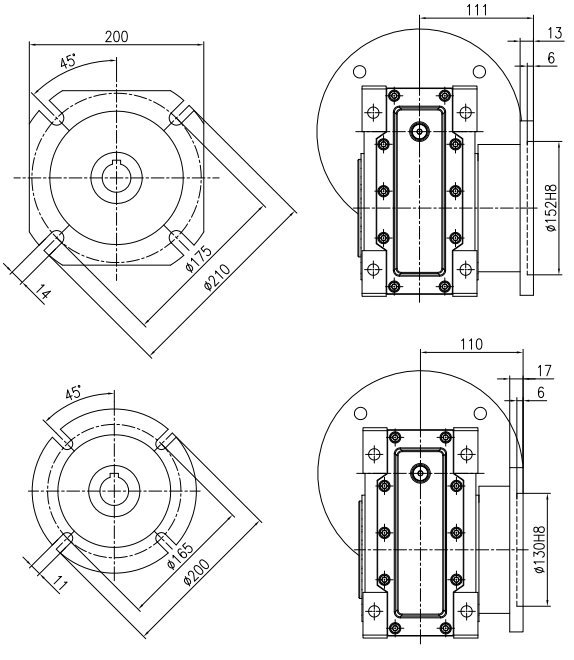

FC

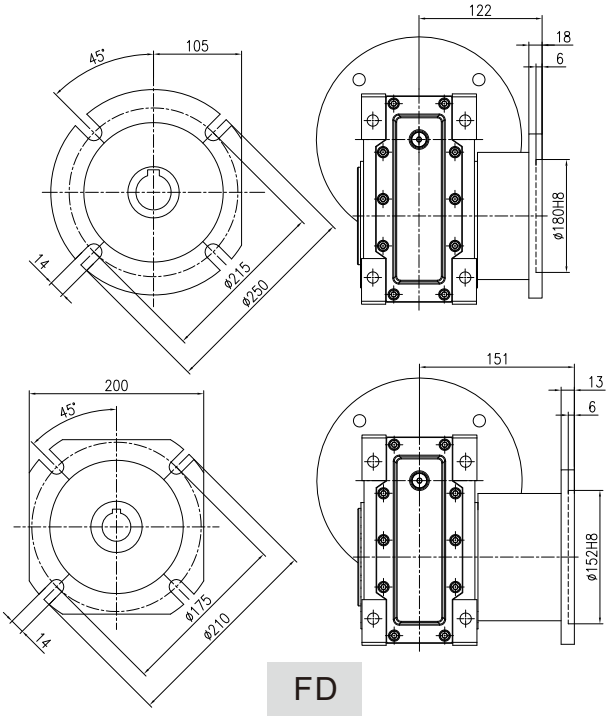

FD

IEC	D_{E8}	b	t	P	M	N	S	T	L
63B5	11	4	12.8	140	115	95	9	3.5	53
71B5	14	5	16.3	160	130	110	9	4	60
80B5	19	6	21.8	200	165	130	11	4	79
80B14	19	6	21.8	120	100	80	6.5	3.5	69
90B5	24	8	27.3	200	165	130	11	4	79
90B14	24	8	27.3	140	115	95	9	3.5	79
100/112B5	28	8	31.3	250	215	180	13.5	4	89
100/112B14	28	8	31.3	160	130	110	9	4.5	89

$D_{1\,H8}$	b_1	t_1
35	10	38.3
38*	10*	41.3*

* 非标产品，订单时请说明
* Only on request

重量（不包括马达）
≈13.4kg

Weight without motor
≈13.4kg

WKM 90C..

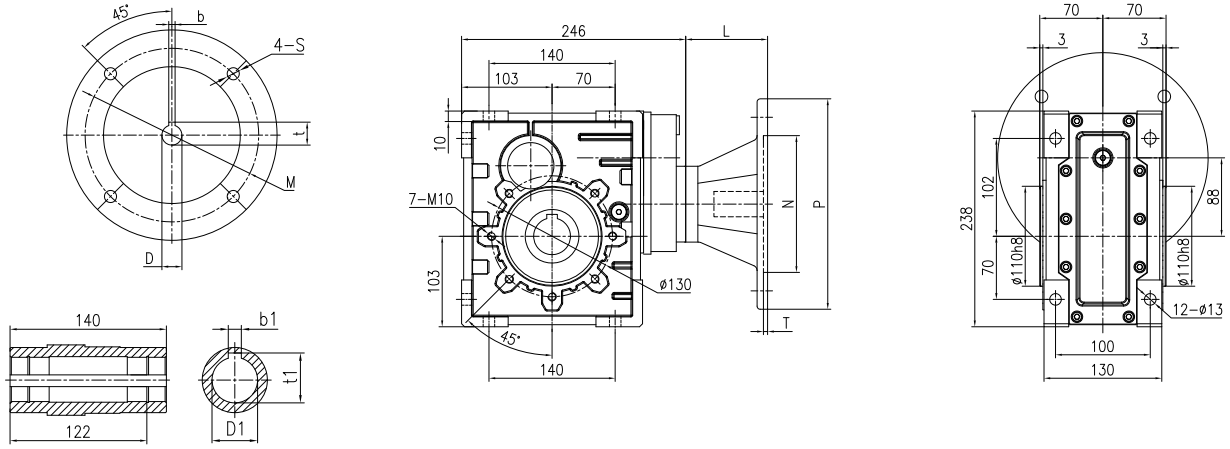

FA

FB

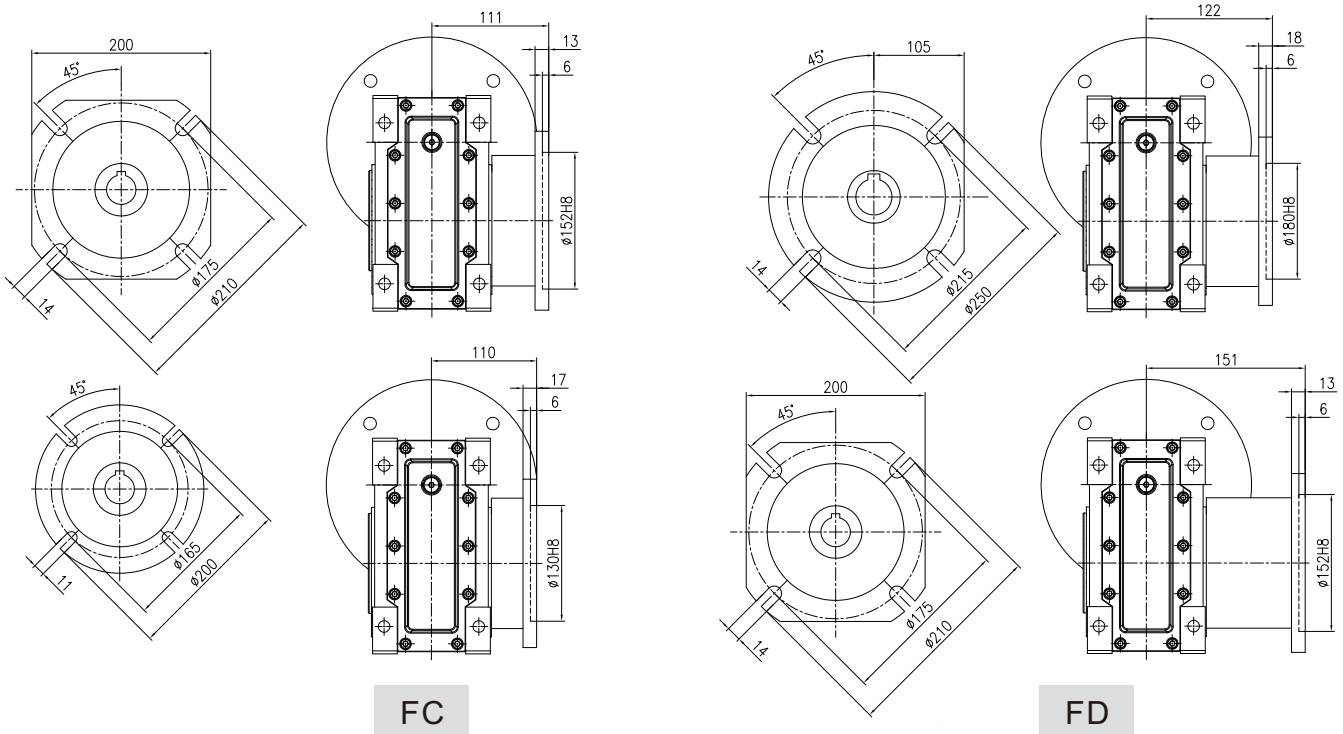

FC

FD

IEC	D_{E8}	b	t	P	M	N	S	T	L
63B5	11	4	12.8	140	115	95	9	3.5	53
71B5	14	5	16.3	160	130	110	9	4	60
80B5	19	6	21.8	200	165	130	11	4	79
80B14	19	6	21.8	120	100	80	6.5	3.5	69
90B5	24	8	27.3	200	165	130	11	4	79
90B14	24	8	27.3	140	115	95	9	3.5	79

$D_{1\,H8}$	b_1	t_1
35	10	38.3
38*	10*	41.3*

* 非标产品，订单时请说明
* Only on request

重量（不包括马达）
≈14.6kg

Weight without motor
≈14.6kg

7.2 WKMS.. 外形尺寸 / Outline Dimension

WKMS..B

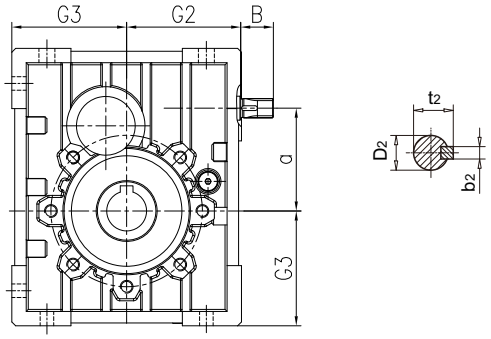

WKMS..C

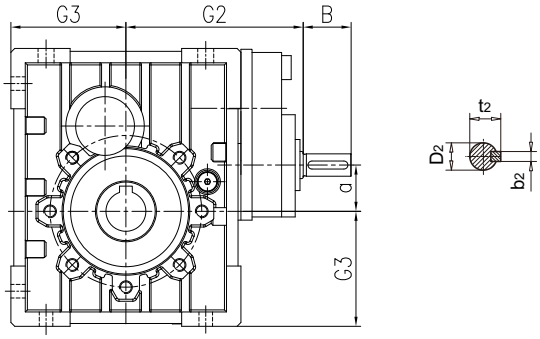

	B	D_{2j6}	G_2	G_3	a	b_2	f_2	t_2
WKM50B	20.5	12	60	60	57	3	M5	13.2
WKM50C	23	11	100	60	21.5	4	M5	12.5
WKM63B	20.5	12	71.5	72	64.5	3	M5	13.2
WKM63C	23	11	111	72	29	4	M5	12.5
WKM75B	26.2	17	87	86	74.5	5	M5	19
WKM75C	30	14	127	86	30.5	5	M5	16
WKM90B	28	17	102	103	88	5	M5	19
WKM90C	30	14	143	103	44	5	M5	16

8. 附件尺寸图表 / ACCESSORIES OUTLINE DIMENSION SHEET

8.1 输出轴 / Output Shafts

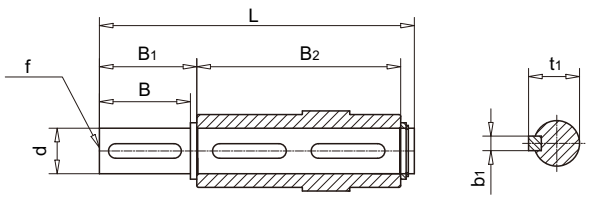

DZ1,DZ2

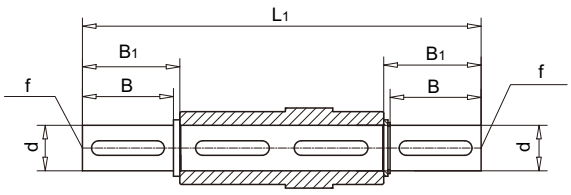

SZ

	d_{h6}	B	B_1	G_1	L	L_1	f	b_1	t_1
WKM50	25	50	53.5	92	153	199	M10	8	28
WKM63	25	50	53.5	112	173	219	M10	8	28
WKM75	28	60	63.5	120	192	247	M10	8	31
WKM90	35	80	84.5	140	234	309	M12	10	38

* 非标产品，订单时请说明
* Only on request

8.2 WKM.. 扭力臂 / Torque Arm

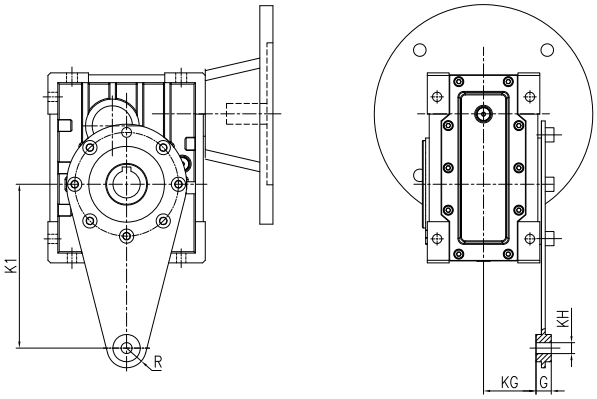

	K1	G	KG	KH	R
WKM50	100	14	38.5	10	18
WKM63	150	14	49	10	18
WKM75	200	25	48	20	30
WKM90	200	25	57.5	20	30

9. 旋转方向 / Direction of rotation

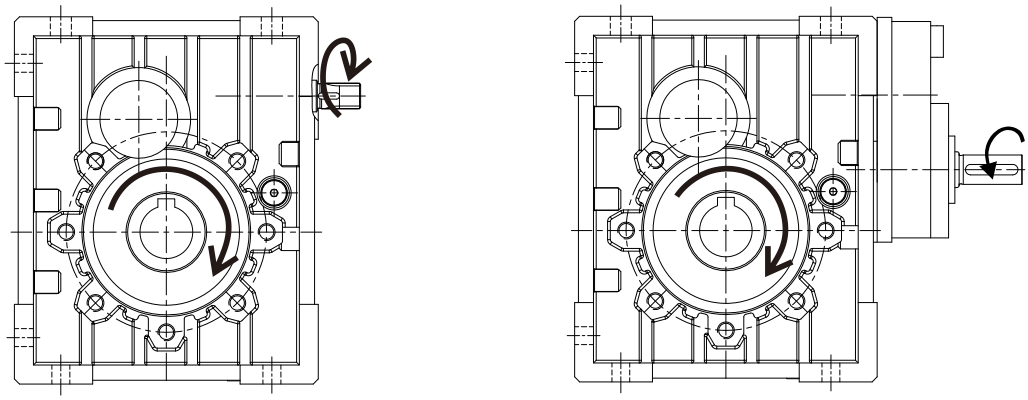

减速机在使用时，电机可正反转输入使用；推荐使用上图所示输入轴旋转方向为准双曲面齿轮最佳啮合方向。

The motor can be run either CW or CCW. When using with gearbox, the direction on chart is recommended

10. 安装 / INSTALLATION

10.1 注意事项 Note recommendations

1. 减速器与机械设备装配之前，要检查减速器输出轴的旋转方向是否正确。

Check whether the rotation direction of output shaft of reducer is correct before fitting to the machine.

2. 减速器与原动机、设备装配之前，应检查各轴径、孔径、键和键槽的偏差尺寸，避免装配过紧、过松影响减速器性能。

Before connect with the prime mover and device, please check the reducer's every axial diameter, aperture, key and key slot, to be sure their dimensions are not deviation, and avoid assembling too tight or too loose, unless it will influence the reducer's performance.

3. 减速器必须牢固地安装在机械设备上，避免有松动或振动。

The mounting on the machine must be stable to avoid any vibration.

4. 尽可能地避免减速器暴露在烈日阳光下和恶劣环境中。

Whenever possible, protect the reduction unit against solar radiation and bad weather.

5. 如果减速器存放时间长达4-6个月，应检查油封是否浸润在润滑油中，若出现油封唇口会粘在轴上，或失去了弹性，请更换油封。

In the case of particularly lengthy periods of storage (4-6 months), if the oil seal is not immersed in the lubricant inside the unit, it is recommended to change it. It is because the rubber could stick to the shaft or may even have lost the elasticity.

6. 与减速器的空心轴或实心轴配合连接时，应在轴上配合部分涂上润滑油，以免卡死或氧化。

When connect with hollow or solid shaft, please grease the joint to avoid lock or oxidation.

7. 使用时必须通过油位镜孔或打开油塞,检查油位。

Check the correct level of the lubricant through the oil mirror, if there is one.

8. 使用新减速器时，不能满负载起动，应该逐步增大负载。

Starting must take place gradually, without immediately applying the maximum load.

9. 使用各类电机直联型减速器时，若电机重量偏大，应设支撑装置。

Supporting unit is required when using reducer that connect with motor directly, if the weight of motor is comparatively heavy.

10. 确保电机风扇附近有良好的通风环境，以免影响散热效果。

Ensure the motor cools correctly by assuring good passage of air from the fan side.

11. 减速器的标准工作环境温度是-5℃至40℃，如果不在这范围时，请与我们技术服务人员联系。

Standard working temperatures should be between -5℃ to +40℃, if not, please call the Technical Service.

10.2 使用限制 Service restrictions

本样本给出的参数基本上是按通用减速机标准进行编制的。当遇到下列应用情况时，如有必要请与我们技术服务人员联系：

Specification on this catalogue is organized according to standard of general reducer. It is also necessary to take due consideration of and carefully assess the following applications by calling our Technical Service:

1. 性能参数表基础上提高转速时；

2. 应用在惯性特别大的设备上时(惯性加速度系数f_a>10)；

3. 当减速器出现故障有可能会对操作者造成危害时；

4. 应用在减速器过度疲劳状态时；

5. 工作环境温度低于-5℃或高于40℃时；

6. 在化学腐蚀环境中使用时；

7. 在盐性环境中使用时；

8. 在辐射性高的环境中使用时；

9. 在环境气压不在正常大气压力下使用时；

10. 安装方位在这样本中没有提到时。

避免把减速器部分或整台浸入水里或其他液体中。

减速器承受的最大负载扭矩不能超过两倍于性能参数表中规定的正常扭矩（当使用系数f_s=1时）：这里最大负载扭矩是指能承受瞬间短暂的过载，它出现在过载启动、刹车、振动或其他动态操作环境中。

1. As speed increase based on datasheet

2. Applications when f_a>10 .

3. Use in services that could be hazardous for people if the reduction unit fails.

4. Applications with high dynamic strain on the case of the reduction unit.

5. When working temperature is under -5℃ or over 40℃.

6. Use in chemically aggressive environments.

7. Use in a salty environment.

8. Use in radioactive environments.

9. Use in environments pressures other than atmospheric pressure.

10. Mounting positions not mentioned in the catalogue.

Avoid applications where even partial immersion of the reduction unit is required.

The maximum torque that the gear reducer can support must not exceed two times the nominal torque (f_s=1) stated in the performance tables. Intended for momentary overloads due to starting at full load, braking, shocks or other causes, particularly those that are dynamic.

11. 润滑油 / LUBRICATION

11.1 润滑油型号 / Types of lubrication

	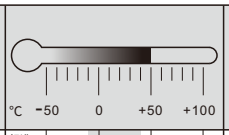	ISO	SHELL	MOBIL	BP	润滑油类型 lubrication type
WKM..	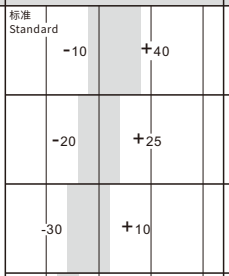	VG 220	Shell Omala 220	Mobilgear 630	BP Energol GR-XP 220	矿物油 Mineral oil
		VG 150 VG 100	Shell Omala 100	Mobilgear 627	BP Energol GR-XP 100	
		VG 68-46 VG 32	Shell Tellus T 32	Mobil D.T.E. 13M		
	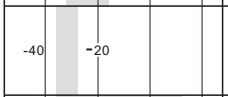	VG 22 VG 15	Shell Tellus T 15	Mobil D.T.E. 11M	BP Energol HLP-HM 15	
	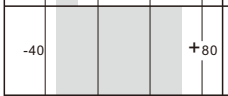	VG 220	Shell Omala HD 220	Mobil SHC 630		合成油 Synthetic oil
	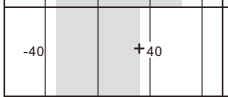	VG 150		Mobil SHC 629		
	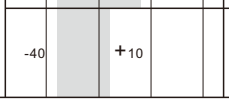	VG 32		Mobil SHC 624		

WKM.. 润滑油加注量 / Lubricant fill quantity

减速器型号 Gear units	加注量 Fill quantity in liters 单位:升(L)					
	B3	B6	B7	B8	V5	V6
WKM50B	0.22	0.20*	0.13*	0.15	0.25	0.14
WKM50C#	0.07	0.04	0.31	0.05	0.08	0.09
WKM63B	0.42	0.35*	0.24*	0.22	0.46	0.25
WKM63C#	0.07	0.04	0.04	0.05	0.08	0.09
WKM75B	0.70	0.58*	0.42*	0.42	0.75	0.45
WKM75C#	0.13	0.09	0.09	0.09	0.15	0.17
WKM90B	1.21	0.95*	0.72*	0.67	1.3	0.74
WKM90C#	0.13	0.09	0.09	0.09	0.15	0.17

规定的加注量为参考值。精准值的变化与级数和传动比有关。请您在加注润滑油时一定要注意油位螺栓所指示的精确油量。后期调整安装方式时，您必须根据改变后的安装方式相应调整加注润滑剂。上表中列出了不同安装方式(B3、B6、B7……)的减速机相应的标准参考润滑油注入量值。

The specified filling amount is a reference value. The change of the precision value is related to the number of stages and the transmission ratio. Please pay attention to the precise amount of oil indicated by the oil level bolt when adding lubricating oil. When you adjust the installation method later, you must adjust the lubricant according to the changed installation method.The above table lists the corresponding standard reference lubricant injection values for reducers with different installation methods (B3, B6, B7…).

#:采用3级传动减速机时，各自加注3级箱体和2级箱体的润滑油，润滑油互不相通，表中的加注量为3级箱体润滑油加注量。

#:When using a 3-stage transmission reducer, fill the lubricating oil of the 3-stage tank and the 2-stage tank respectively, and the lubricating oil is not connected to each other. The filling amount in the table is the filling amount of the 3-stage tank.

*:表示在此安装方式，不能仅凭油位塞加注润滑油，油位需高出油位塞，加注量按表中所示。

*: It means that in this installation method, the oil level plug cannot be filled with lubricating oil only, the oil level must be higher than the oil level plug, and the filling amount is as shown in the table.

12. 维护

1). 新减速机在工作约300小时或三个月后，需更换润滑油,在换油时应使用合适的清洗剂小心地冲洗齿轮箱,不得将不同型号的润滑油混合使用。

2). 每3000工作小时，最低程度半年，应检测油以及油位，油封密封不严引起滴漏的常规检测，若是IEC输入的减速器，则检测检查弹性体，必要时进行更换。

3). 根据不同的工作条件（见下图）而定，最长每三年检测一次，更换润滑油，及轴承润滑油脂。

4). 根据不同的工作条件而定，更换输出轴上的油封。

5). 产品出现故障时，不要拆卸部件，请与本公司销后服务部门联系（需提供减速器规格、出厂日期、编号、已使用时间、主机名称、主机生产单位和故障类型）后，再采取合理的措施。

12. MAINTENANCE

1). For gear units, first oil change should be done after 300 working hours (run-in period)or three months. The right cleaning lotion is required to clean the gear units with care. Never mix the synthetic oil and mineral oil together.

2). Every 3000 working hrs, at least every 6 months, you have to check the oil and oil level, the seals visually for leakage . For IEC input type reducer, the elastomer should be tested or replaced if necessary.

3). Depending on the operating conditions (see chart below), every 3 years need inspection as longest period, including changing the mineral oil and replacing the bearing grease.

4). Depending on the operating conditions, change the oil seals on output shaft.

5). Once the malfunctions appear, stop disassembling the parts, and please contact the customer service (the information about specification, delivery date, series number, time used, name of machine, machine manufacturer, malfunction problems is required), then take the reasonable measures.

适用于正常环境条件下标准减速器的更换时间间隔
Oil change intervals for standard gear units under normal environmental conditions

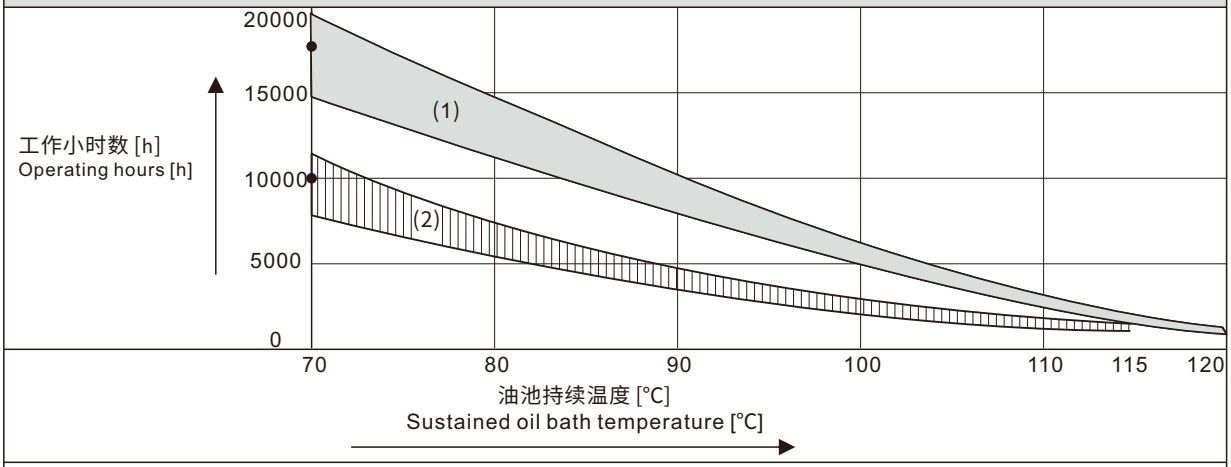

- 每种机油类型的平均值为70°C
- Average value per oil type at 70°C

(1) 合成油 Synthetic oil
(2) 矿物油 Mineral oil

13. 存放

1). 防雨,防雪,防潮,防尘,防冲击。

2). 在设备和地面之间垫放木块或其他材料。

3). 开箱后暂不适用的齿轮减速器在其加工表面涂上防锈油，并应及时放回包装箱内。

4). 对存放两年及更长时间的减速机,在进行定期检查时，应及时检查清洁度和机械损伤，以及防锈层是否完好。

13. STORAGE

1). Protected against rain and snow, no shock loads.

2). Lay the block or other material between the ground and equipment.

3). The opened but not used gear units should be added with the anti-corrosive oil on its surface, and then return to the packing containers intime.

4). If reducer is storage for 2 years or more, please check cleanliness and mechanical damage, and whether corrosion protection is still there.

14. 定货须知

减速器定单请向我们提供以下信息:

1). 减速器型号标记(减速器类型、速比、功率和安装方式)。

2). 减速器表面喷涂颜色。

3). 订购数量。

4). 其他特殊要求。

5). 单位名称、联系人、联系电话。

14. NOTICE FOR ORDER

Please offer the following information when place the orders:

1). Type of the reducer(type,ratio,power and mounting position).

2). generally the gear units paint in silver.

3). Order quantity.

4). Other special requirements.

5). Company, contact person and telephone no.

15. 运转故障 / MALFUNCTIONS

15.1 减速器故障 / Gear unit malfunctions

故障	可能的原因	解决办法
异常、均匀的运转噪声。	A. 滚动/碾压噪声：轴承损坏。 B. 冲击型噪声：齿轮啮合不均匀。	A. 检测润滑油，更换轴承。 B. 请向客户服务部咨询。
异常、不均匀的运转噪声。	机油中有异物。	·检测润滑。 ·停止运转传动装置，向客户服务部咨询。
机油泄漏1) ·在减速器盖上。 ·在电机凸缘上。 ·在电机轴密封圈上。 ·在减速器凸缘上。 ·在输出端轴密封圈上。	A. 减速器底座上的橡胶密封发生渗漏。 B. 密封圈损坏。 C. 减速器没有排气。	A. 拧紧各个外盖上的螺钉并且观察减速器。如果机油继续泄露，请向客户服务部咨询。 B. 请向客户服务部咨询。 C. 给减速器排气（参见“安装方式”）。
机油从排气阀旁渗出。	A. 机油太多。 B. 传动装置安装方式错误。 C. 频繁冷起动（机油起泡沫）和/或者较高的油位。	A. 修正油量（参见“润滑油”）。 B. 正确安装排气阀并且矫正油位（参见“安装方式”）。
尽管电机在运转或者传动轴已经被驱动，但是传动轴不转动。	减速器中的轴轮毂联接断裂。	将减速器或减速电机送修。

1) 在磨合试运转阶段（24小时的运转时间内），轴密封圈有可能出现短期内的漏油/油脂的现象。

Problem	Possible cause	Remedy
Unusual, regular running noise	A. Meshing/grinding noise: Bearing damage. B. Knocking noise: Irregularity in the gearing	A. Check the oil, change bearings B. Contact customer service
Unusual, irregular running noise	impurity in the oil	·Check the oil ·Stop the drive, contact customer service
Oil leaking1) ·From the gear cover plate ·From the motor flange ·From the motor oil seal ·From the gear unit flange ·From the output end oil sea	A. Rubber seal on the gear cover plate is leaking B. defective seal C. Reducer is not vented	A. Tighten the bolts on the gear cover plate and observe the gear unit. If oil is still leaking, contact customer service B. Contact customer service C. Vent the gear unit (see “Mounting Positions”)
Oil leaking from breaking valve	A. Too much oil B. Drive mounted in wrong mounting position C. Frequent cold starts(oil foams) and/or high oil level	A. Correct the oil level (see Sec. “Inspection and Maintenance”) B. Mount the breather correctly (see Sec. “Mounting Positions”)and correct the oil level (see “Lubricants”)
Output shaft does not turn although the motor is running or the input shaft is rotated	Connection between shaft and hub in reducer is cracked	Send reducer to factory for repair

1) Short-term oil/grease leakage at the oil seal is possible in the run-in phase (24 hours running time).

16. 减速器负载特征表(参考件) / Charge Characteristic Chart (for reference)

风机类 AIR BLOWERS		卷扬机齿轮传动装置 Hoisst gear assembly	A
风机(轴向和径向) Air blower(axial or radial)	A	吊杆起落齿轮传动装置 Derrick gear assembly	B
冷却塔风扇 Fan of cooling tower	B	转向齿轮传动装置 Stering gear assembly	B
引风机 Induced draught fan	B	行走齿轮传动装置 Moving gear assembly	C
螺旋活塞式风机 Rotary piston type fan	B	挖泥机类 LAND DREDGER	
蜗轮式风机 Turbo-fan	A	筒式传送机 Drum-type coveyer	C
建筑机械类 CONSTRUCTION MACHINERY		筒式转动机 Drum-type rotation wheel	C
混泥土搅拌机 Concrete mixer	B	挖泥头 Dredger head	C
卷扬机 Hoist	B	机动绞车 Powered crab	B
路面建筑机械 Road building machinery	B	泵 Pump	B
钻孔机 Boring mill	B	泵转动齿轮传动装置 Pump turning gear assembly	B
化工机械类 CHEMICAL MACHINERY		行走齿轮传动装置(履带) Moving gear assembly (apron wheel)	C
搅拌机(液体) Mixer (liquid)	A	行走齿轮传动装置(铁轨) Moving gear assembly(track)	B
搅拌机(半液体) Mixer (half liquid)	B	食品工业机械类 FOODSTUFF PROCESSING MACHINERY	
离心机(重型) Centrifuge (heavy)	B	灌注及装箱机器 Placer or box filler	A
离心机(轻型) Centrifuge (light)	A	甘蔗压榨机 Cane crusher	A
冷却混筒** Cooling rolling drum	B	甘蔗切断机** Cane cutter	B
干燥滚筒** Dry rolling drum	B	甘蔗粉碎机** Cane crasher	C
搅拌机 Mixer	B	搅拌机 Mixer	B
压缩机类 COMPRESSOR		酱状物吊筒 Paste bucket	B
活塞式压缩机 Piston type compressor	C	装包机 Packager	A
涡轮式压缩机 Turbo-compressor	B	糖和甜菜切断机 Beet slicer	B
传送运输机类 TRANSMISSION FREIGHTER		糖和甜菜清洗机 Beet washing machine	B
平板传送机 Pan conveyer	B	发动及转换器类 MOTOR AND CONVERSION EQUIPMENTS	
平衡块升降机 Balance lifter	B	频率转换器 Frequency converter	C
槽式传送机 Trough conveyer	B	发动机 Motor	C
带式传送机(大件) Ribbon conveyer (large piece)	C	焊接发动机 Welding motor	C
带式传送机(碎料) Ribbon conveyer (small piece)	B	洗衣机类 WASHING MACHINE	
筒式面粉传送机 Drum-type flour conveyer	A	滚筒 Rolling drum	B
链式传送机 Chain conveyer	B	洗衣机 Washing machine	B
环式传送机 Ring type conveyer	B	金属滚轧机类 METAL ROLLER MACHINE	
货物升降机 Lifter	B	钢坯剪断机** Steel cutter	C
卷扬机 Hoist	B	链式输送机** Chain conveyer	B
连杆式传送机 Crank-connecting conveyer	B	冷轧机** Cold mill	C
载入升降机 Lifter	B	连铸成套输送机 Continuous casting equipments	B
螺旋式传送机 Worm conveyer	B	冷床** Cold bed	B
钢带式传送机 Steel-band conveyer	B	剪料机头** Cropper	C
链式槽型传送机 Chain reed-type conveyer	B	交叉转弯输送机** Cross steering transmitter	B
绞车运输机 Crab freighter	B	除锈机** Deruster	C
起重机类 HOIST		重型和中型板轧机** Heavy and medium steel mill	C
转臂式起重传动齿轮装置 Bracket swing gear assembly	B	捧坯切轧机** Bar mill	C

捧坯转运机类 BAR TRANSMISSION EQUIPMENTS	B	泵类 PUMPS	
捧坯堆料机 Bar pusher	B	离心泵(稀液体) Centrifugal pump (thin liquid)	A
推床 Push bed	B	离心泵(半液体) Centrifugal pump（half liquid）	B
剪板机** Shears	C	活塞泵 Displacement pump	C
板材摆升降台** Lumber elevator platform	B	柱塞泵 Plunger pump	C
轧辊调整装置 ROLL ADJUSTING EQUIPMENTS	B	压力泵 Force pump	C
辊式矫直机 Roller lvevling machine	B	塑料机械类 PLASTIC EQUIPMENTS	
轧钢机辊道(重型)** Mill rolling way (heavy)	C	压光机** Glazing press	B
轧钢机辊道(轻型)** Mill rolling way (light)	B	挤压机** Ejecting press	B
薄板轧机** Sheet rolling mill	C	螺旋压出机** Spiral extruding machine	B
修整剪切机** Trimming shears	B	混合机** Mixing machine	B
焊管机 Pipe welder	C	橡胶机械类 RUBBER EQUIPMENT	
焊管机(带材和线材)Soldering machine(belt material and wire rod)	B	压光机** Glazing press	B
线材拉拔机 Wire drawbench	B	挤压机** Ejecting press	C
金属加工机床类 METAL PROCESSING MACHINE TOOLS		混合搅拌机** Mixing stir machine	B
动力轴 Power shaft	A	捏合机 Kneading machine	B
锻造机 Drop hammer	C	滚压机** Roller machine	C
锻锤 Machine tool and necessary	C	石料、瓷土料加工机械类	
机床及附助装置 Machine tool and necessary	A	STONE PORCELAIN CLAY PROCESSING EQUIPMENTS	
机床及主要传动装置 Machine tool and main driving equipment	B	球磨机 Ball crusher	B
金属刨床 Metal facing machine	C	挤压料碎机** Ejecting press and breaker	C
板材矫直机床 Plate-leveling machine tool	C	破碎机 Breaker	C
冲床 Backing-out punch	C	压砖机 Brick press	C
冲压机床 Press machine tool	C	锤料碎机** Beating crusher	C
剪床 Cutting machine	B	转炉** Converter	C
薄板弯曲机床 Sheet bending machine tool	B	筒型磨机** Cylinder mill	C
石油工业机械类 PETROLEUM PROCESSING MACHINERY		纺织机械类 TEXTILE MACHINERY	
输油管油泵** Pump of oil pipe line	B	送料机 Feeding machine	B
转子钻井设备 Rotary drilling equipment	C	织布机 Loom machine	B
制纸机类 PAPERING MACHINE		印染机 Dyeing machine	B
压光机** Glazing press	C	精制筒 Purified drum	B
多层纸板机** Multilayer paper board machine	C	威罗机 Welon machine	B
干燥滚筒** Drying cylinder	C	水处理设备类 WASTER TREATMENT EQUIPMENTS	
上光滚筒** Glazing cylinder	C	鼓风机** Air blast	B
搅浆机** Masher	C	螺杆泵 Screw pump	B
搅浆擦碎机** Mashing and breaking machine	C	木料加工机床 WOOD PROCESSING MACHINE TOOL	
吸水滚** Suction roll	C	剥皮机 Barker	C
潮纸滚压机** Wet oaoer roller machine	C	刨床 Facing machine	B
吸水滚压机** Water absorbing roller machine	C	锯床 Saw bench	C
威罗机 Welon machine	C	木材加工机床 Wood processing machine tool	A

注：A—均匀冲击负载；B—中等冲击负载；C—重冲击负载；**—用于24小时工作制。
Note: A - Uniform bad; B - Moderate shock load; C - Heavy shock load; ** - for 24hour system.

备忘录

备忘录